Service Manual

MG3 & MG3 Hybrid+

The Service Manual provides the specification, system introduction, service procedure and adjustment information of the new MG3 & MG3 Hybrid+ series vehicles.

After mastering the content of this manual and materials in the service bulletins of SAIC Motor Passenger Vehicle Co., the technicians of Authorised Repairers of SAIC Motor Passenger Vehicle Co. can provide better service for MG3 & MG3 Hybrid+ vehicle owners.

For relevant information about product brands, part numbers or special tools mentioned in this manual, we recommend contacting SAIC Motor Passenger Vehicle Co.

SAIC Motor Passenger Vehicle Co.
All Rights Reserved.

Information is due in Aug, 2023.

Without prior written approval from SAIC Motor Passenger Vehicle Co., no part of the manual shall be reproduced, stored in retrieval system or transmitted in any form or by any means (including but not limited to electronic, mechanical, photocopy and recording). The statement above applies to all texts, illustrations and tables.

SN.	Section	Summary	Type	Time
1		Initial release		April 24, 2023

How to Use This Manual

Overview

To help you with the use of this Manual, we divided the Manual into several chapters and sections. The title of each chapter is outside each page header, and the title of the corresponding section is inside the page header.

The contents of the chapter and section are at the beginning of the Manual, which are divided by chapters and sections. Page numbers start with the first page of the text, which are outside the footer of the page.

All the repair operation steps must be arranged in the order they normally appear in. The serial number in the illustration refers to the corresponding text.

The instructions for adjustment and repair operations include the service tool number to be applied, and the corresponding illustration also reflects the use status of the tool. The instructions for adjustment and repair operations also involve wear limits, torque values, guide information and useful assembly details. Each adjustment or repair operation has an unique repair operation number.

The meanings of "Warning", "Note" and "Prompt" are as follows:

"Warning" requires you to take necessary measures or not to take prohibited measures. If a "Warning" is neglected, the following consequences may occur:

- Serious injury to a technician
- Serious injury to other technical staff in the work area
- In case of improper vehicle repair, serious injury to the driver and/or passengers in the vehicle will be caused.

"Note" requires to pay special attention to necessary measures or prohibited measures. If a "Note" is neglected, the following consequences may occur:

- Damage to the vehicle
- Unnecessary vehicle repairs
- Unnecessary parts replacement
- Improper operation or performance of the system or component under repair
- Damage to any system or component which is dependent upon the proper operation or performance of the system or component under repair
- Improper operation or performance of any system or component which is dependent upon the proper operation or performance of the system or component under repair
- Damage to fasteners, basic tools, or special tools
- Leakage of coolant, lubricating oil or other main fluid

"Description" emphasizes the necessary features of certain diagnostic or service procedure. It is for the following purposes:

- Clarify a procedure
- Provide additional information for the execution of procedure
- Provide internal reasons why to operate according to recommended procedures
- Provide information which can help to execute the procedures more effectively
- Present information that gives the technician the benefit of past experience in accomplishing a procedure with greater ease

"Prompt" provides some help information.

Reference

LH or RH in this manual is viewed from the rear of vehicle. For the vehicle equipped with engine, after the engine and transmission assembly is removed, the crankshaft pulley end of engine refers to the front.

Operations involved in this manual do not include tests after service. This is especially important after the component related to safety is serviced or replaced.

Dimensions

Dimensions referenced here are based on design engineering specifications. This manual includes all the available service limits.

The company will continuously improve the vehicle specification, design and manufacturing. So there will be some changes in vehicle frequently. Although we try our best to make the manual be correctly written, we cannot guarantee there is no little error between the specification and description in this manual as for the vehicle in any particular situation.

Service and Replacement Instructions

Components

In case of replacement, use components recommended by the Company only.

Pay particular attention to the following points related to the service or replacement and accessories:

- Use of other components instead of those recommended by the SMC may impair vehicle safety and anti-corrosion measures.
- Apply the torque value given by this Manual.
- Fit the clamp device on the specified location. If the clamping effect of the clamp device is impaired by the remove operations, then replace it.
- Use of other components instead of those recommended by the SMC will make the warranty invalid.

All components recommended by the SMC enjoy the right for warranty.

Dealers of the SMC shall only supply components recommended by the SMC.

Special Tools

Use of the special tools helps to prevent possible component damage.

Part of the operations in the Manual cannot be fulfilled without related special tools.

All the special tools described in the Manual are available from:

Shanghai Runyue Industry Development Co., Ltd.

Address: Annex Building, Lotus Building, No. 159, Tianzhou Road, Shanghai

Postal code: 200233

Tel: 021-64853663

Fax: 021-64853639

Contents

General Information 1

General Information 1

General Precautions 1
Safety Instructions 2
Environmental Precautions 3
General Fitting Instructions 5
Ball and Roller Bearings 6
Oil Seals 7
Joints and Joint Faces 8
Locking Devices 9
Screw Threads 10
Fasteners Identification 11
Flexible Pipes and Hoses 13
Fuel Handling Precautions 14
Electrical Precautions 15
Supplementary Restraint System Precautions 16
SRS Component Replacement Policy 21
Air Conditioning System Precautions 23
Air Conditioning Compressor Replacement 25
Controller Maintenance Precautions 26

Lifting and Towing 27

Lifting 27
Roadside Assistance 28

Identification Number 30

Vehicle Identification Number 30
Position of Other Signs 31

Maintenance & Lubrication 32

Capacity 32
Fluids 33
Lubricating Fluids 34

Engine 35

Engine Mechanical GS62H 35

Specification 35
Torque 35
Parameters 36
Description and Operation 42
System Layout 42
Description 58
Operation 60
Service Guide 61
Powertrain GS62H 61
Powertrain Mount 64
Flywheel-HT11 66
Cylinder Head 67
Cylinder Block 69
Crankshaft 71
..... 73
Lower Crankcase Oil Baffle Assembly 74
Oil Pan 75
Camshaft Cover GS62 76
Crankshaft Vibration Damper 78
Front Timing Cover 79
..... 81
Intake and Exhaust Valves 82
Timing Chain 83
Camshaft Phase Adjustment Actuator 84
Timing Chain Tensioner 85
Crankshaft Sprocket (to Camshaft) 86
..... 87
Camshaft 88
Hydraulic Tappet 90
..... 91
Piston Connecting Rod Assembly 92
Oil Pump Chain 94
Oil Pump Chain Tensioner 95
Oil Pump 96
..... 97
..... 98
Front Crankshaft Oil Seal 99
Rear Crankshaft Oil Seal 100
..... 101
..... 102
..... 103
..... 104
..... 105
..... 106
..... 107
Cylinder Head Check 108
Piston Connecting Rod Check 115
Cylinder Block Check 118
..... 122
Engine Oil Filter 123
..... 124
..... 125
..... 126
..... 129
Special Tool Summary Sheet 130
Special Tools 130

Contents

Engine Cooling System 133
Specification..... 133
Torque 133
Parameters 133
Description and Operation..... 134
System Layout..... 134
System Control Diagram..... 138
Description 140
Operation 141
Service Guide - ENG Cooling 144
Coolant - Drain and Refill 144
Expansion Tank Cap - Pressure Test..... 145
System Pressure Test 146
Cooling System Overflow Pipe..... 147
Engine Expansion Tank Overflow Pipe 148
..... 149
..... 150
..... 151
..... 152
Pipeline Assembly - Automatic Transmission Oil Cooler to Engine 153
Pipeline Assembly - Heater to Automatic Transmission Oil Cooler 154
..... 155
..... 156
Coolant - Drain and Refill 156
Expansion Tank Cap - Pressure Test..... 157
System Pressure Test 158
Pipeline Assembly - Low Temperature Radiator to Expansion Tank..... 159
..... 160
Pipeline Assembly - Electric Drive Unit to Low Temperature Radiator 161
..... 162
..... 163
Cooling Fan..... 163
Radiator..... 164
Cooling System Radiator..... 165
..... 166
Upper Shock Pad..... 167
Lower Shock Pad..... 168
..... 169
Engine Fuel System 170
Specification..... 170
Torque 170
Description and Operation..... 171
System Layout..... 171
Description 172
Service Guide 173
Fuel Pump 173
Fuel Tank 174
..... 176
Canister 177
Underfloor Fuel Pipeline 178
..... 179
Fuel Filler Pipe Assembly..... 180
Fuel System - Pressure Release..... 182
..... 183
Fuel Tank - Drain..... 184
Special Tool Summary Sheet 185
Special Tools 185
Engine Control System GS62H..... 186
Specification..... 186
Torque 186
Parameters..... 186
Description and Operation..... 187
System Layout 187
System Control Diagram..... 188
Description 189
Detailed Information List of Component Pins..... 190
Service Guide 191
Hot Film Air Mass Meter GS62H..... 191
Fuel Rail GS62H 192
Fuel injectors-GS62H..... 193
Spark Plug GS62H 194
Engine Control Module (ECM)GS62H 195
Ignition Coil GS62H..... 196
Crankshaft Position Sensor GS62H 197
Engine Coolant Temperature Sensor GS62H..... 198
..... 199
Camshaft Position Sensor GS62H..... 200
..... 201
Camshaft Phase Adjustment Solenoid Valve GS62H..... 202
..... 203
..... 204
Front Oxygen Sensor GS62H..... 205
Rear Oxygen Sensor GS62H..... 206
Canister Solenoid Valve GS62H..... 207
..... 208

Contents

Special Tool Summary Sheet 209
Special Tools..... 209
Engine Intake/Exhaust System GS62H 210
Specification..... 210
Torque 210
Description and Operation..... 211
System Layout 211
Description 212
Operation 213
Service Guide 214
..... 214
..... 215
..... 216
..... 217
..... 218
Electronic Throttle GS62H 219
..... 220
..... 221
..... 222
..... 223
Middle Exhaust Pipe GS62H 224
Heat Shield - Rear Muffler Assembly GS62H..... 225
Heat Shield - Exhaust Passage GS62H 226
Exhaust Manifold GS62H..... 227
EGR Module GS62H..... 228
EGR Module Outlet Pipe GS62H..... 229
EGR Cooler Water Inlet Pipe GS62H 230
..... 231
..... 232

Transmission 233

Shift Manipulation Control System-HT11 233
Specification..... 233
Torque 233
Description and Operation..... 234
System Layout..... 234
System Control Diagram..... 235
Description 236
Operation 237
Service Guide 238
Gear Shift Control Mechanism Assembly 238
Electric Drive Transmission-HT11..... 239
Specification..... 239
Torque 239
Parameters 239
Description and Operation..... 241
System Layout..... 241
Description 246
Operation 250
Service Guide - Electric Drive Transmission HT11..... 256
..... 256
..... 257
..... 258
..... 259
Input Shaft Oil Seal 260
Motor rotary transformer cover plate 261
Exterior LV Harness 262
Cooling Water Pipe..... 263
Electronic oil pump..... 264
..... 265
Valve Body Harness 266
..... 267
Pressure Filter..... 268
..... 269
Oil Cooler 271
Oil Pan..... 272
..... 273
..... 274
..... 275
Oil Pressure Sensor..... 276
..... 277
..... 279
..... 280
Special Tool Summary Sheet 281
Special Tools 281

Power and Control System 283

HV Battery Pack..... 283
Specification..... 283
Torque 283
Parameters 283
Description and Operation..... 285
System Layout..... 285
System Control Diagram..... 286
Description 287
Operation 288
Service Guide 289
Disassemble Precautions..... 289

Contents

General Description 290
HV battery pack recharge 291
High Voltage Insulation Test 292
Test Procedures 292
Manual Service Disconnect 293
HV Battery Pack 294
..... 296
..... 298
..... 299
..... 300
..... 301
..... 303
..... 305
Battery pack base 306
Special Tool Summary Sheet 307
Special Tools 307
HV Harness 308
Specification 308
Torque 308
Service Guide 309
HV Harness—HV Battery Pack 309
HV Harness-Air Conditioning Compressor 310
HV Battery Pack Cooling System 312
Service Guide 312
..... 312
..... 313
..... 314
..... 315

A/C System 317

A/C System-HEV 317
Specification 317
Torque 317
Parameters 317
Description and Operation 319
System Layout 319
Description 322
Description and Operation- ATC 327
System Layout 327
System Control Diagram 328
Description 329
Operation 330
Detailed Information List of Component Pins 331
Service Guide - General Instructions 332
Refrigerant Recovery and Refill 332
Air Conditioning System Seals 335
Air Conditioning System O-ring Replacement 336
Service Guide - Compressor/Condenser 337
Compressor 337
Condenser 338
Service Guide - Refrigerant Pipeline 340
Evaporator Pipeline Assembly 340
A/C Refrigerant Pressure Sensor 341
..... 342
Service Guide - A/C Box 343
A/C Box Assembly 343
Air Filter Cover 344
Pollen Filter 345
Blower Speed Control Resistor 346
Blower Assembly 347
Internal/External Recirculated Damper Actuator 348
Left Temperature Damper Actuator 349
Right Temperature Damper Actuator 350
Mode Damper Actuator 351
Heater Core Assembly 352
Evaporator Core Assembly 353
Evaporator Expansion Valve 354
A/C Box Drain Pipe 355
A/C Box Footwell Air Outlet Temperature Sensor 356
Evaporator Temperature Sensor 357
Service Guide - Air Duct 358
Central Face Air Duct 358
Left Face Air Duct 359
Left Face Air Outlet Temperature Sensor 360
Right Face Air Duct 361
Right Face Air Outlet Temperature Sensor 362
Centre Console Air Duct 363
..... 364
..... 365
Relief Valve 366
Service Guide - Control-related 367
A/C Controller 367
Solar Sensor 368
Interior Temperature Sensor 369
Exterior Temperature Sensor 370

Contents

A/C Control Panel....371

Steering System 373

Steering System 373

Specification....373

Torque....373

Parameters 373

Description and Operation....374

System Layout....374

System Control Diagram....376

Description....377

Operation....378

Detailed Information List of Component Pins....379

Service Guide 380

Steering Gear Subassembly 380

Steering Gear Outer Tie Rod....382

Steering Gear Inner Tie Rod 383

Steering Gear Boot Service Kit 384

Upper Steering Column Assembly....385

Steering column lock base....387

Steering Column Shield....388

Steering Intermediate Shaft 389

Steering Wheel Assembly 390

Steering Wheel Moulding....391

Steering Wheel Multifunction Switch 392

Steering Wheel Combination Switch 393

Suspension System....395

Wheel Alignment.... 395

Specification....395

Torque....395

Parameters 395

Description and Operation....396

Description....396

Service Guide 399

Four-wheel Alignment....399

Front Suspension 400

Specification....400

Torque....400

Parameters 400

Description and Operation....401

System Layout....401

Description....405

Service Guide 407

Front Lower Arm Assembly....407

Front Lower Swing Arm Outer Ball Joint....408

Front Lower Swing Arm Rear Bushing 409

Front Shock Absorber Assembly 410

Front Subframe Assembly 412

Front Horizontal Stabilizer Bar....414

Front Horizontal Stabilizer Bar Connecting Rod 416

Front Wheel Hub Bearing Assembly....417

Steering Knuckle 419

Special Tool Summary Sheet 420

Special Tools 420

Rear Suspension 422

Specification....422

Torque....422

Parameters 422

Description and Operation....423

System Layout....423

Description....425

Service Guide 426

Rear Shock Absorber Assembly 426

Rear Suspension Spring Assembly....427

Rear Wheel Hub Bearing Assembly....428

Rear wheel bracket assembly 429

....430

Special Tool Summary Sheet 431

Special Tools 431

Tyres and Wheels 432

Specification....432

Torque....432

Service Guide 433

Tyres and Wheels....433

Tyre Pressure Monitoring System 434

Description and Operation....434

System Layout....434

Description....435

Operation....436

Service Guide 437

Tyre Pressure Sensor....437

Brake System....439

Brake System.... 439

Specification....439

Torque....439

Parameters 440

Description and Operation....441

Contents

System Layout 441
System Control Diagram 442
Description 443
Operation 445
Detailed Information List of Component Pins 448
Service Guide 449
Safety Instructions 449
..... 449
Front Brake Caliper Housing Assembly 450
Front Brake Caliper Bracket Assembly 451
Front Brake Disc 452
Front Brake Disc Guard Plate 454
Rear Disc Brake Friction Plate Assembly 455
Rear Disc Brake Caliper Housing Assembly 456
Rear Disc Brake Caliper Bracket Assembly 457
Parking Motor Assembly 458
Rear Brake Disc 459
Rear Brake Disc Guard Plate 461
Master Cylinder Far-end Reservoir Assembly 462
Master Cylinder Near-end Reservoir Assembly 463
Reservoir Connecting Oil Pipe 464
Brake Lamp Signal Sensor 465
Brake Modulator Unit Assembly-IBS 466
Front Wheel Speed Sensor Assembly 467
Rear Wheel Speed Sensor Assembly 468
Brake Pedal Assembly 469
Accelerator Pedal Assembly 470
..... 471
..... 473
..... 474
Front Brake Hose Assembly 476
Rear Brake Hose Assembly 477
Brake System Bleeding 478

Drivetrain 479

Wheel Drive Shaft 479
Specification 479
Torque 479
Description and Operation 480
System Layout 480
Description 481
Service Guide 482
Front Right Axle Shaft Assembly 482
Front Left Axle Shaft Assembly 484
Tripod Joint Assembly 486
Tripod Joint Assembly Sleeve 487
Constant Velocity Universal Joint Assembly 488
Constant velocity joint assembly sleeve 489
Special Tool Summary Sheet 490
Special Tools 490

Interior Fittings 491

Instrument Panel and Centre Console 491
Specification 491
Torque 491
Service Guide 492
Instrument Panel End Cover Plate Assembly 492
Instrument Panel Body Assembly 493
Driver Side Lower Trim Panel Assembly 495
Instrument Panel Lower Closure Panel 496
Glove Box Assembly 497
Instrument Panel Side Air Outlet Assembly 498
Central Instrument Panel Air Outlet Assembly 499
Instrument Panel Driver Side Trim Panel Assembly 500
..... 501
Instrument Panel Beam Assembly 502
Centre Console Heater Closure Panel Assembly 504
Centre Console Cup Holder Assembly 505
Centre Console Assembly 506
..... 507
Centre Console Armrest Assembly 508
Centre Console Upper Trim Panel Assembly and Switch 509
Centre Console Rear Panel Assembly 510
Entertainment Panel Switch 511

Seats 512
Specification 512
Torque 512

Contents

Description and Operation 513
System Layout 513
Description 514
Operation 515
Service Guide 516
Front Seat Assembly 516
Seat Headrest Guide Rod 517
Front Seat Inner Trim Panel 518
Front Seat Exterior Trim Panel 519
Front Seat Backrest Assembly 521
Front Seat Cushion Assembly 522
Front Seat Cushion Cover 523
Rear Seat Backrest Assembly 524
Rear Seat Back Cover 525
Rear Seat Cushion Assembly 526
Rear Seat Cushion Cover 527
Rear Seat Back Cushion Hinge Bracket 528
..... 529
..... 530
..... 531

Door Interior Trim 532
Service Guide 532
Front Door Interior Trim Panel 532
Front Door Inner Handle 533
Rear Door Interior Trim Panel 534
Rear Door Inner Handle 535

Interior Trim Panel 536
Specification 536
Torque 536
Service Guide 537
A Pillar Upper Trim Panel 537
A Pillar Lower Trim Panel 538
B Pillar Upper Trim Panel 539
B Pillar Lower Trim Panel 540
C Pillar Upper Trim Panel 541
C Pillar Lower Trim Panel 542
Door Sill Trim Panel 543
Sunvisor 544
Roof Interior Trim 545
Inner Roof Handle 546
Trunk Side Trim Panel 547
Trunk Sill Trim Panel 548
Tail Gate Interior Trim Panel 549
Carpet 550
Dash Panel Inner Sound Insulation Pad 551
..... 553
..... 554
Trunk Cover 555

Exterior Fittings 557

Stationary Windows 557
Service Guide 557
Windscreen 557
Rear Window 558

Bumpers and Fascias 559
Specification 559
Torque 559
Service Guide 560
Front Bumper 560
..... 562
Rear Bumper 563
..... 565

Body Exterior Parts 566
Specification 566
Torque 566
Service Guide 567
A/C Air Inlet Grille Panel and Accessories 567
Front Wheelhouse Liner Assembly 569
Rear Wheelhouse Liner Assembly 571
Front Quarter Window Trim Cover Assembly 572
Bottom Deflector 573

Rearview Mirror 574
Specification 574
Torque 574
Description and Operation 575
System Layout 575
System Control Diagram 576
Description 577
Operation 578
Service Guide 579
Exterior Rearview Mirror Assembly 579
Exterior Rearview Mirror Glass 580
Exterior Rearview Mirror Cover 581
Manual Anti-dazzle Interior Rearview Mirror 582

Sunroof 583
Specification 583
Torque 583

Contents

Description and Operation 584
System Layout 584
System Control Diagram 585
Description 586
Operation 587
Service Guide 588
Sunroof Assembly 588
Sunroof Deflector Assembly 590
Front Sunroof Glass Panel 591
Sunroof Sunshade 592
Sunroof Glass Panel Motor 593
Front Sunroof Drain Pipe 594
Rear Sunroof Drain Pipe 595
Sunroof Outer Weatherstrip 596
Wiper and Washer 597
Specification 597
Torque 597
Description and Operation 598
System Layout 598
System Control Diagram 599
Description 600
Operation 601
Service Guide 603
Windscreen Wiper Blade Assembly 603
Windscreen Wiper Arm Assembly 604
Windscreen Wiper Module Assembly and Motor 605
Windscreen Washer Reservoir Assembly 606
Windscreen Washer Reservoir Filler Pipe Assembly 607
Windscreen Washer Pump Assembly 608
Windscreen Washer Pump Hose 609
Rear Window Wiper Blade Assembly 610
Rear Window Wiper Arm Assembly 611
Rear Window Wiper Motor 612
Rear Window Washer Pump Hose 613
Rear Window Washer Middle Connecting Hose 614
Rear Window Washer Nozzle Hose 615
..... 616

Lighting System 617

Interior Lighting 617
Description and Operation 617
System Layout 617
System Control Diagram 618
Description 619
Operation 620
Service Guide 621
Overhead Console Assembly and Sunroof Switch 621
..... 623
Trunk Lamp 624
Vanity Mirror Lamp 625
..... 626
Exterior Lighting 627
Specification 627
Torque 627
Description and Operation 628
System Layout 628
System Control Diagram 629
Description 630
Operation 632
Service Guide 635
Headlamp Assembly 635
..... 636
Side direction indicator lamp 637
Headlamp Lighting Calibration 638
Tail Lamp Assembly 639
Rear Combination Lamp Assembly 640
..... 641
..... 642
High-mounted Stop Lamp Assembly 643
..... 644

Door System 645

Door Sheet Metal and Accessories 645
Specification 645
Torque 645
Service Guide 646
Front Door Adjustment 646
Front Door Hinge 647
Front Door Assembly 648
..... 650
..... 651
Driver Side Door Outer Handle Assembly 652
Rear Door Outer Handle 653
Driver Side Door Lock Body Assembly 654
Rear Door Adjustment 655
Rear Door Hinge Assembly 656

Contents

Rear Door Assembly 657
Rear Door Lock Body Assembly 658
..... 659
..... 660
Door Functional Parts 661
Specification..... 661
Torque 661
Description and Operation-Door Window Regulator..... 662
System Layout..... 662
System Control Diagram..... 663
Description 664
Operation 666
Detailed Information List of Component Pins..... 667
Service Guide 669
Front Door Window 669
..... 670
Front Door Window Regulator Adjustment 671
Front Door Window Inner Weatherstrip..... 672
Front Door Window Outer Weatherstrip..... 673
Front Door Weatherstrip 674
Front Door Frame B-pillar Decorative Film 675
Front Window Glass Run Channel Weatherstrip..... 676
Front Door Waterproof Membrane 677
..... 678
..... 679
..... 680
Rear Door Window Regulator Adjustment 681
Rear Door Window 682
Rear Door Window Inner Weatherstrip..... 683
Rear Door Window Outer Weatherstrip..... 684
Rear Door Weatherstrip 685
Rear Door Frame B-pillar Decorative Film 686
Rear Door Window Glass Run Channel Weatherstrip..... 687
Rear Door Waterproof Membrane..... 688
..... 689
..... 690
Power Window Switch - Others 691
Door Lock Switch 692
Body System 693
Fender 693
Specification..... 693
Torque 693
Service Guide 694
Fender 694
Front-end Module..... 696
Specification..... 696
Torque 696
Service Guide 697
Front-end Module..... 697
Bonnet 698
Specification..... 698
Torque 698
Service Guide 699
Bonnet Adjustment..... 699
Bonnet Assembly and Hinge..... 700
Bonnet Lock Body Assembly..... 701
Bonnet Release Cable..... 702
Bonnet Weatherstrip..... 703
Seals at A/C Air Inlet Grille Panel Side 704
..... 705
Bonnet Release Handle..... 706
..... 707
Tail Gate 708
Specification..... 708
Torque 708
Service Guide 709
Tail Gate Adjustment..... 709
Tail Gate Assembly and Hinge 710
Tail Gate Lock Assembly..... 711
Tail Gate Striker 712
Tail Gate Gas Spring 713
..... 714
Tail Gate Buffer Block..... 715
Tail Gate Weatherstrip 716
Tailgate Open Switch 717
Fuel Filler Flap 718
Specification..... 718
Torque 718
Service Guide 719
Fuel Filler Flap Assembly..... 719
..... 720

Contents

.....721
Body Control Module..... 722
Specification.....722
Torque.....722
Description and Operation.....723
System Layout.....723
System Control Diagram.....724
Description.....725
Operation.....726
Detailed Information List of Component Pins.....727
Service Guide.....731
Body Control Module (BCM).....731
Horn..... 732
Specification.....732
Torque.....732
Description and Operation.....733
System Layout.....733
System Control Diagram.....734
Detailed Information List of Component Pins.....735
Service Guide.....736
Horn.....736

Body Panel and Painting.....737

Serviceable Panels Information..... 737
Roof cover plate.....737
Engine Compartment Panel.....739
Dash Panel.....740
Bodyside Panel.....741
Front Floor.....742
Rear Floor.....743
Door Panel Assembly.....744
Bonnet Panel Assembly.....745
Tailgate Panel Assembly.....746
Collision Repair..... 747
Body Material.....747
Damage Diagnosis.....748
Confirmation of Maintenance Scheme.....750
Body Correction.....751
Panel Shaping.....753
Panels Replacement.....754
Paint..... 758
Overview.....758
Coating Process.....760
Film Inspection Method and Defect Identification.....764
Sealing..... 768
Overview.....768
Tightness Inspection.....770
Sealant Position Information.....771
Gasket Position Information.....782
Anti Corrosion..... 785
Overview.....785
Anti-corrosion Products and Processes.....787
Welding Process..... 791
Overview of Welding Methods.....791
Welding Protection Measures.....793
Welding Parts Remove.....794
Laser Welded Roof Repair.....796
OEM Welding Information.....798
Body Size..... 805
Point-to-point Size Information.....805
Bodyside and Roof Information.....805
Underbody Information.....807
Rear End Information.....808
Interior Information.....809
Front End Information.....810
Gap Information.....811
Body Side Information.....811
Front End Information.....812
Rear End Information.....813
Sunroof Information.....814

Safety and Protection.....815

Vehicle Access System..... 815
Description and Operation.....815
System Layout.....815
System Control Diagram.....816
Operation.....817
Service Guide.....818
Start/Stop Ignition Switch.....818
Gateway..... 819
Specification.....819
Torque.....819
Description and Operation.....820
System Layout.....820
Description.....821
Operation.....822

Contents

Detailed Information List of Component Pins....823
Service Guide....824
Gateway Module....824
Seat Belt....825
Specification....825
Torque....825
Description and Operation....826
System Layout....826
System Control Diagram....827
Description....828
Operation....829
Service Guide....830
Front Seat Belt Assembly....830
Front Seat Belt Buckle....831
Rear Seat Belt Assembly....832
Rear Seat Belt Buckle....833
Rear Seat Central Belt....834
Airbag....835
Specification....835
Torque....835
Description and Operation....836
System Layout....836
System Control Diagram....837
Description....838
Operation....839
Detailed Information List of Component Pins....840
Service Guide....842
....842
SRS Side Impact Sensor....843
....844
Steering Wheel Airbag....845
Instrument Panel Airbag....846
Supplemental Restraint System Sensing and Diagnostic Module....847
Pedestrian Alert Control System....848
Specification....848
Torque....848
Description and Operation....849
System Layout....849
System Control Diagram....850
Description....851
Operation....852
Detailed Information List of Component Pins....853
Service Guide....854
Pedestrian Alert Control Speaker....854
Parking Assist System....855
Description and Operation....855
System Layout....855
System Control Diagram....856
Description....857
Operation....858
Information of Component Pins....859
Service Guide....864
Rear Ultrasonic Sensor....864
360° Panoramic Front View Camera....865
360° Panoramic Side View Camera....866
AVM Rear Camera....867
Driver Assistance System....868
Specification....868
Torque....868
Description and Operation....869
System Layout....869
System Control Diagram....870
Description....871
Operation....872
Service Guide....873
Front View Camera....873
Rearward Driver Assistance System....874
Specification....874
Torque....874
Description and Operation....875
System Layout....875
System Control Diagram....876
Description....877
Operation....878
Service Guide....879
....879
Passive Entry and Passive Start System....880
Description and Operation....880
System Layout....880
System Control Diagram....881
Description....882
Operation....883
Detailed Information List of Component Pins....885
Service Guide....886
Passive Entry and Passive Start Antenna - Front....886

Contents

Passive Entry and Passive Start Antenna - Centre 887
Passive Entry and Passive Start Antenna - Rear 888
Passive Entry and Passive Start Antenna - Rear Bumper Fascia 889

Driver Information and Entertainment 891

On-board Telephone, Entertainment and Navigation System 891
Specification 891
Torque 891
Description and Operation 892
System Layout 892
System Control Diagram 893
Description 894
Operation 895
Detailed Information List of Component Pins 896
Service Guide 900
On-board Entertainment Mainframe 900
Front Door Tweeter 901
Front Door Woofer 902
Rear Door Woofer 903
Microphone 904
Emergency Call Switch 905
Emergency Call Speaker 906
Communication Module 907
Communication Antenna 908
Radio Antenna Coil 909
Antenna Amplifier 910

Display and Gauge 911
Specification 911
Torque 911
Description and Operation 912
System Layout 912
System Control Diagram 913
Description 914
Operation 915
Detailed Information List of Component Pins 916
Service Guide 917
Instrument Pack 917

Power and Signal Distribution 919

LV Fuse Box 919
Specification 919
Torque 919
Service Guide 920
Front Compartment Fuse Box Lower Cover 920

LV Battery and Its Management System 921
Specification 921
Torque 921
Description and Operation 922
Description 922
Detailed Information List of Component Pins 924
Service Guide 925
Battery Tray 925
Battery Tray Bracket 926
Battery charging cable (PEB positive cable) 927
Battery-HEV 928
Battery exhaust pipe 929
Battery current sensor-HEV 930
Battery positive cable - HEV 931
Battery negative cable - HEV 932

LV Harness 933
Service Guide 933
Front Compartment Harness 933
Instrument Panel Harness 938
Body Harness 941
Front Door Harness 946
Rear Door Harness 947
Rear Trunk Wiring Harness Assembly 948
Centre Console Harness 949
Fuel Pump Harness 950

Auxiliary Power 951
Service Guide 951
..... 951
USB Charging Module 951

Mobile Phone Wireless Charging System 953
Specification 953
Torque 953
Description and Operation 954
System Layout 954
Description 955
Detailed Information List of Component Pins 956
Service Guide 957

Contents

Mobile Phone Wireless Charging Module 957

Module Self-Learning and Programming..... 959

Module Self-Learning and Programming..... 959

Engine Control Module (ECM)..... 959

..... 960

Drive Motor Control Module (PEU)..... 961

Electronic Oil Pump (BAEOP)..... 964

Shifter Control Unit (SCU) 965

Heating, Ventilation and Air Conditioning Control Module (HVAC)..... 966

Electric Power Steering Module (EPS) 967

Integrated Brake System (IBS) 968

Body Control Module (BCM)..... 969

Window Regulator Initialisation 971

Sunroof..... 972

Gateway Control Module (GW)..... 974

Supplemental Restraint System Sensing and Diagnostic Module (SDM) 976

Front View Camera Module (FVCM) 977

360° AVM Camera..... 978

Rearward Driver Assistance System (LHRDA/RHRDA) 979

Instrument Pack (IPK)..... 981

Front Infotainment Control Module (FICM) 982

Communication Module (TBOX)..... 984

Electronic Battery Sensor (EBS) 987

Front Left Seat Module (FLSM)..... 988

Battery Management System (BMS) 989

Shifter Control Unit - SCU 991

Glossary..... 993

Glossary..... 993

General Information

General Precautions

Dangerous Substances

Modern vehicles contain many materials or liquids which can be hazardous to both personal health and the environment if not handled with care.

Warning : Many liquids and other substances used in vehicles are poisonous and should under no circumstances be consumed and should, as far as possible, be kept from contact with the skin. These liquids and substances include acid, antifreeze, brake fluid, fuel, windscreen washer additives, lubricants, refrigerants and various adhesives.

Warning : Always read carefully the instructions printed on labels or stamped on components and obey them implicitly. Such instructions are included for reasons of your health and personal safety. Never disregard them.

Many O rings, seals, hoses, flexible pipes and other similar items which appear to be natural rubber, are in fact, made of synthetic materials called Fluoroelastomers. Under normal operating conditions, this material is safe and does not present a health hazard. However, if the material is damaged by fire or excessive heating, it can break down and produce highly corrosive hydrofluoric acid.

Contact with hydrofluoric acid can cause serious burns on the skin. If skin contact does occur:

- Remove any contaminated clothing immediately.
- Irrigate affected area of skin with a copious amount of cold water or limewater for 15 to 60 minutes.
- Obtain medical assistance immediately.

Should any material be in a burnt or overheated condition, handle with extreme caution and wear protective clothing (seamless industrial gloves, protective apron, etc.).

Decontaminate and dispose of gloves immediately after use.

Lubricating Fluids

Avoid excessive skin contact with used lubricating oils and always adhere to the health protection precautions.

Warning : Avoid excessive skin contact with used engine oil. Used engine oil contains potentially harmful contaminants which may cause skin cancer or other serious skin disorders.

Warning : Avoid excessive skin contact with mineral oil. Mineral oils remove the natural fats from the skin, leading to dryness, irritation and dermatitis.

Health Protection Precautions

The following precautions should be observed at all times:

- Wear protective clothing, including impervious gloves when practicable.
- Avoid prolonged and repeated contact with oils, particularly used engine oils.
- Do not put oily rags in pockets.
- Avoid contaminating clothes (particularly those next to the skin) with oil.
- Overalls must be cleaned regularly. Discard heavily soiled clothing and oil impregnated footwear.
- First aid treatment should be obtained immediately for open cuts and wounds.
- Apply barrier creams before each work period to help prevent lubricating oil from contaminating the skin.
- Wash with soap and water to ensure all oil is removed (any skin cleansers and nail brushes will help).
- Use moisturizers after cleaning; preparations containing lanolin help replace the skin's natural oils which have been removed.
- Do not use petrol/gasoline, kerosene, diesel fuel, oil, thinners or solvents for cleaning skin.
- Where practicable, degrease components prior to handling.
- If skin disorders develop, obtain medical advice without delay.
- Wear eye protection (e.g. goggles or face shield) if there is a risk of eye contamination. Eye wash facilities should be provided in close vicinity to the work area.

Safety Instructions

Lifter

Caution：It is best to use the lift when working under the vehicle. Be sure to hold the wheels with chocks and apply parking brake.

Always use the recommended jacking points.

Always ensure that any lifter has sufficient load capacity for the weight to be lifted.

Ensure the lifter is standing on level ground prior to lifting or jacking.

Apply the hand brake and chock the wheels.

Warning：Do not work on or under a vehicle supported only by a jack. Always support the vehicle on safety stands.

Do not leave tools, lifting equipment, spilled oil, etc. around or on the work bench area. Always keep a clean and tidy work area.

Brake Shoe and Brake System Friction Plate

Always use the correct gear and brake pads. When renewing brake system friction plates and brake shoes, always replace as complete axle sets.

Brake Hydraulic System

Observe the following recommendations when working on the brake system:

- Apply two spanners to loosen or tighten brake pipes or pipe fittings.
- Ensure the natural curve shape of hose without distortion or deformation.
- Fix brake pipes securely with retaining clips and ensure that the pipe cannot contact a potential chafing point.
- Containers used for brake fluid must be kept absolutely clean.
- Do not store brake fluid in an unsealed container, otherwise it will absorb water and in this condition would be dangerous to use due to a lowering of its boiling point.
- Do not allow brake fluid to be contaminated with mineral oil, or put new brake fluid in a container which has previously contained mineral oil.
- Do not re-use the brake fluid removed from the system.
- Always use clean brake fluid or a recommended alternative to clean hydraulic components.
- After disconnection of brake pipes and hoses, immediately fit suitable blanking caps or plugs to prevent the ingress of dirt.
- Only use the correct brake fittings with compatible threads.
- Observe absolute cleanliness when working with hydraulic components.

Cooling System Caps and Plugs

Remove expansion tank caps, coolant drain pipe or bleed screws with great care when the cooling system is hot, especially if it is overheated. To avoid the possibility of scalding, allow the cooling system to cool before attempting removal.

Environmental Precautions

Overview

This section provides general information which can help to reduce the environmental impacts from the activities carried out in workshops.

Emissions to Air

Many of the activities that are carried out in workshops emit gases and fumes which contribute to global warming, depletion of the ozone layer and/or the formation of photochemical smog at ground level. By considering how the workshop activities are carried out, these gases and fumes can be minimised, thus reducing the impact on the environment.

Exhaust Fumes

Running car engines is an essential part of workshop activities and shall be carried out in a well ventilated environment. However, the amount of time engines are running and the position of the vehicle should be carefully considered at all times, to reduce the release of poisonous gases and minimise the inconvenience to people living nearby.

Solvents

Some of the cleaning agents used are solvent based and will evaporate to atmosphere if used improperly, or if cans are left unsealed. All solvent containers should be firmly closed when not needed and solvent should be used sparingly. Suitable alternative materials may be available to replace some of the commonly used solvents. Similarly, many paints are solvent based and the spray should be minimised to reduce solvent emissions.

Refrigerant

Discharge and replacement of refrigerant from air conditioning units should only be carried out by using the correct equipment.

Engine

Always adhere to the following:

- Don't leave engines running unnecessarily;
- Minimise testing times and check where the exhaust fumes being blown.

Diluent:

- Keep lids on containers of solvents;
- Only use the minimum quantity;
- Consider alternative materials;
- Minimise over-spray when painting.

Gases:

- Use the correct equipment for collecting refrigerants;
- Don't burn rubbish on site.

Discharges to Water

Oil, petrol, solvent, acids, hydraulic oil, antifreeze and other such substances should never be poured down the drain and every precaution must be taken to prevent spillage reaching the drains.

Handling of such materials must take place well away from the drains and preferably in an area with a kerb or wall around it, to prevent discharge into the drain. If a spillage occurs, it should be soaked up immediately. Having a spill kit available will make this easier.

Precautions

Always adhere to the following disposal and spillage prevention instructions.

- Never pour anything down a drain without first checking that it is environmentally safe to do so, and that it does not contravene any local regulations.
- Store liquids in a walled area;
- Make sure that taps on liquid containers are secure and cannot be accidentally turned on;
- Protect bulk storage tanks from vandalism by locking the valves;
- Transfer liquids from one container to another in an area away from open drains;
- Ensure lids are replaced securely on containers;
- Have spill kits available near to points of storage and handling of liquids.

Spill Kits

Special materials are available to absorb a number of different substances. They can be in granular form, ready to use and bought in convenient containers for storage. Disposal of used spill-absorbing material is dealt with in 'Waste Management" section.

Land Contamination

Oils, fuels, solvents, etc. can contaminate any soil that they are allowed to contact. Such materials should never be disposed of by pouring onto soil and every precaution must be taken to prevent spillage reaching soil. Waste materials stored on open ground could also leak, or have polluting substances washed off them that would contaminate the land. Always store these materials in suitable robust containers.

Precautions

Always adhere to the following:

- Don't pour or spill anything onto the soil or bare ground;
- Don't store waste materials on bare ground.

Local Issues

A number of environmental issues will be of particular concern to residents and other neighbors close to the site. The sensitivity of these issues will depend on the proximity of the site and the layout and amount of activity carried on at the site.

Car alarm testing, panel beating, hammering and other such noisy activities should, whenever possible, be carried out

indoors with doors and windows shut or as far away from residential area as possible.

Be sensitive to the time of day when these activities are carried out and minimise the time of the noisy operation, particularly in the early morning and late evening.

Another local concern will be the smell from the various materials used. Using less solvent, paint and petrol could help prevent this annoyance.

Local residents and other business users will also be concerned about traffic congestion, noise and exhaust fumes, be sensitive to these concerns and try to minimise inconvenience from deliveries, customers and servicing operations.

Checklist

Always adhere to the following:

- Identify where the neighbors who are likely to be affected are situated;
- Minimise noise, smells and traffic nuisance;
- Prevent waste pollution by disposing of waste in the correct container;
- Have waste containers emptied regularly.

Waste Management

One of the major ways that pollution can be reduced is by the careful handling, storage and disposal of all waste materials that occur on sites. This means that it is necessary to not only know what the waste materials are, but also to have the necessary documentation and to know local regulations that apply.

Handling and Storage of Waste

They should be stored in such a way as to prevent the escape of the material to land, water or air.

They must also be segregated into different types of waste, e.g. oil, metals, batteries, used vehicle components. This will prevent any reaction between different materials and assist in disposal.

Disposal of Waste

Disposal of waste materials must only be carried out by waste carriers who are authorized to carry those particular waste materials and have all the necessary documentation. The waste carrier is responsible for ensuring that the waste is taken to the correct disposal sites.

Dispose of waste in accordance with the following guidelines:

- Fuel, hydraulic fluid, anti-freeze and oil: keep separate and dispose of to specialist contractor.
- Refrigerant: collect in specialist equipment and reuse.
- Detergents: safe to pour down the foul drain if diluted.
- Paint, thinners: keep separate and dispose of to specialist contractor.
- Components: send back to supplier for refurbishment, or disassemble and reuse any suitable parts. Dispose of the remainder in ordinary waste.
- Small parts: reuse any suitable parts, dispose of the remainder in ordinary waste.
- Metals: can be sold if kept separate from general waste.
- Tires: keep separate and dispose of to specialist contractor.
- Packaging: compact as much as possible and dispose of in ordinary waste.
- Asbestos material: keep separate and dispose of to specialist contractor.
- Oily and fuel wastes (e.g. rags, used spill kit material): keep separate and dispose of to specialist contractor.
- Air filters: keep separate and dispose of to specialist contractor.
- Rubber/plastics: dispose of in ordinary waste.
- Water pipes: dispose of in ordinary waste.
- Batteries: keep separate and dispose of to specialist contractor.
- Airbags - explosives: keep separate and dispose of to specialist contractor.
- Electrical components: send back to supplier for refurbishment, or disassemble and reuse any suitable parts. Dispose of the remainder in ordinary waste.
- Catalysts: can be sold if kept separate from general waste.
- Used spill-absorbing material: keep separate and dispose of to specialist contractor.

General Fitting Instructions

Component Remove

Whenever possible, clean components and surrounding area before removing.

- Blank off openings exposed by component removal.
- Immediately seal fuel, oil or hydraulic lines when apertures are exposed; use plastic caps or plugs to prevent loss of fluid and ingress of dirt.
- Close the open ends of oilways exposed by component removal with tapered hardwood plugs or conspicuous plastic plugs.
- Immediately a component is removed, place it in a suitable container; use a separate container for each component and its associated parts.
- Clean bench and provide marking materials, labels and containers before removing a component.

Remove

Observe scrupulous cleanliness when removing components, particularly when brake, fuel or hydraulic system parts are being worked on. A particle of dirt or a cloth fragment could cause a serious malfunction if trapped in these systems.

- Blow out all tapped holes, crevices, oilways and fluid passages with compressed air. Ensure that any O-rings used for sealing are correctly replaced or renewed, if disturbed during the process.
- Use marking ink to identify mating parts and ensure correct reassembly. Do not use a centre punch or scriber to mark parts, they could initiate cracks or distortion in marked components.
- Wire together mating parts where necessary to prevent accidental interchange (e.g. roller bearing components).
- Attach labels to all parts which are to be renewed, and to parts requiring further inspection before being passed for reassembly; place these parts in separate containers from those containing parts for rebuild.
- Do not discard a part due for renewal until after comparing it with a new part, to ensure that its correct replacement has been obtained.

Cleaning Components

Always use the recommended cleaning agent or equivalent. Ensure that adequate ventilation is provided when volatile degreasing agents are being used. Do not use degreasing equipment for components containing items which could be damaged by the use of this process.

General Inspection

All components should be inspected for wear or damage before being refitted.

- Never inspect a component for wear or dimensional check unless it is absolutely clean; a slight smear of grease can conceal an incipient failure.
- When a component is to be checked dimensionally against recommended values, use the appropriate measuring equipment (surface plates, micrometers, dial gauges etc.). Ensure the measuring equipment is calibrated and in good serviceable condition.
- Reject a component if its dimensions are outside the specified tolerances, or if it appears to be damaged.
- A part may be refitted if its critical dimension is exactly to its tolerance limit and it appears to be in satisfactory condition. Use "Plastigauge" for checking bearing surface clearances.

Ball and Roller Bearings

Overview

When removing and refitting bearings, ensure that the following practices are observed to ensure component serviceability.

- Remove all traces of lubricant from bearing under inspection by cleaning with a suitable degreasant; maintain absolute cleanliness throughout operations.
- Hold inner ring of bearing between finger and thumb of one hand and spin outer ring to check that it revolves absolutely smoothly. Repeat, holding outer ring and spinning inner ring.
- Rotate outer ring gently with a reciprocating motion, while holding inner ring; feel for any check or obstruction to rotation. Reject bearing if action is not perfectly smooth.
- Lubricate bearing with generous amounts of lubricant appropriate to refitting.
- Inspect shaft and bearing housing for discoloration or other markings which indicate movement between bearing and housing.
- Ensure that shaft and housing are clean and free from burrs before fitting bearing.
- If one bearing of a pair shows an imperfection, it is advisable to replace both with new bearings; an exception could be if the faulty bearing had covered a low mileage, and it can be established that damage is confined to only one bearing.
- Never refit a ball or roller bearing without first ensuring that it is in a fully serviceable condition.
- When hub bearings are removed or displaced, new bearings must be fitted; do not attempt to refit the old hub bearings.
- When fitting a bearing to a shaft, only apply force to the inner ring of the bearing. When fitting a bearing into a housing, only apply force to the outer ring of the bearing.

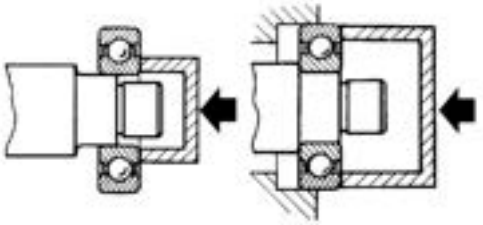

S003040

- In the case of grease lubricated bearings (eg. hub bearings) fill the space between bearing and outer seal with the recommended grade of grease before fitting seal.
- Always mark components of separable bearings (eg. taper roller bearings) when removing, to ensure correct reassembly. Never fit new rollers in a used outer ring; always fit a complete new bearing assembly.

Oil Seals

Overview

Always renew oil seals which have been removed from their working location (whether as an individual component or as part of an assembly). NEVER use a seal which has been improperly stored or handled, such as hung on a hook or nail.

- Carefully examine seal before fitting to ensure that it is clean and undamaged.
- Ensure the surface on which the new seal is to run is free of burrs or scratches. Renew the component if the original sealing surface cannot be completely restored.
- Protect the seal from any surface which it has to pass when being fitted. Use a protective sleeve or tape to cover the relevant surface.
- Lubricate the sealing lips with a recommended lubricant before use to prevent damage during initial use. On dual lipped seals, smear the area between the lips with lubricant.
- If a seal spring is provided, ensure that it is fitted correctly. Place lip of seal towards fluid to be sealed and slide into position on shaft. Use fitting sleeve where possible to protect sealing lip from damage by sharp corners, threads or splines. If a fitting sleeve is not available, use plastic tube or tape to prevent damage to the sealing lip.

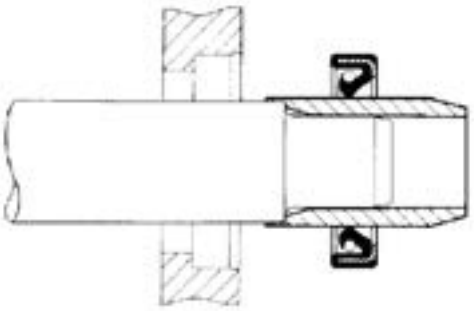

S003041

- Grease outside diameter of seal, place square to housing recess and press into position using great care, and if possible use a 'bell piece' to ensure that seal is not tilted. In some cases it may be preferable to fit seal to housing before fitting to shaft. Never let weight of unsupported shaft rest in seal.

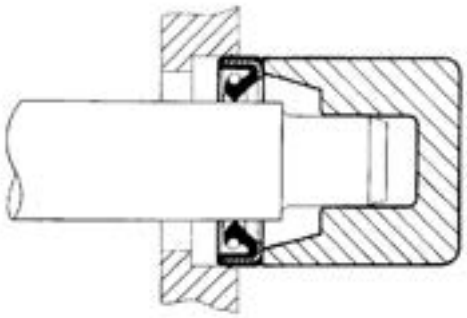

S003042

- Use the recommended service tool to fit an oil seal. If the correct service tool is not available, use a suitable tube approximately 0.4 mm (0.015 in.) smaller than the outside diameter of the seal. Use a hammer VERY GENTLY on drift if a suitable press is not available.
- Press the oil seal to the bottom of housing with sealing lip facing the lubricant. Lubricate the shaft shoulder of the sealing surface to ensure that seal is not tilted in the housing.

Joints and Joint Faces

Overview

Fit joints dry unless specified otherwise.

- Always use the correct gaskets as specified.
- When adhesive is used, apply in a thin uniform film to metal surfaces; take care to prevent adhesive from entering oilways, pipes or gaps.
- If washers and/or adhesive are recommended for use; remove all traces of old adhesive prior to refitting. Do not use a tool which will damage the joint faces and smooth out any scratches or burrs using an oil stone.
- Prior to refitting, blow through any oilways, pipes or gaps with compressed air.

General Information

Locking Devices

Overview

Always replace locking devices with one of the same design.

Tab Washers

Always release locking tabs and fit new tab washers. Do not re-use locking tabs.

Locking Nut

Always use a torque wrench when refitting or removing locking nuts, brake and other pipe connectors.

Locating pin

Always fit new locating pins for the hole.

Circlips

Always fit new circlips of the correct size for the groove.

Keys and Keyways

Remove burrs from edges of keyways with a fine file and clean thoroughly before attempting to refit key.

Clean and inspect key closely; keys are suitable for refitting only if indistinguishable from new, as any indentation may indicate the onset of wear.

Split Pins

Always fit new split-pins of the correct size for the hole in the bolt or stud.

S003043

Screw Threads

Overview

Metric threads to ISO standards are used.

Damaged nuts, bolts and screws must always be discarded. Cleaning damaged threads with a die or tap impairs the strength and fit of the threads and is not recommended.

Always ensure that replacement bolts are at least equal in strength to those replaced.

Castellated nuts must not be loosened to accept a split-pin, except in recommended cases when this forms part of an adjustment.

Do not allow oil or grease to enter blind threaded holes. The hydraulic action on screwing in the bolt or stud could split the housing.

Always tighten a nut or bolt to the recommended torque value. Damaged or corroded threads can affect the torque value.

To check or re-tighten a bolt or screw to a specified torque value, first loosen a quarter of a turn, then re-tighten to the correct torque value.

Oil thread lightly before tightening to ensure a free running thread, except in the case of threads treated with sealant/lubricant, and self-locking nuts.

Fasteners Identification

Bolt Identification

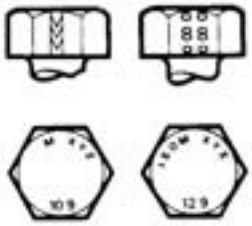

S003044

An ISO metric bolt or screw made of steel and larger than 6 mm in diameter can be identified by either of the symbols ISO M or M embossed or indented on top of the bolt head.

In addition to marks identifying the manufacturer, the top of the bolt head is also marked with symbols indicating the strength grade, e.g. 8.8; 10.9; 12.9; 14.9. As an alternative, some bolts and screws have the M and strength grade symbol stamped on the flats of the hexagon.

Encapsulated Bolts and Screws

S003045

Encapsulated bolts and screws have a locking agent pre-applied to the thread. They are identified by a coloured section which extends 360° around the thread. The locking agent is released and activated by the assembly process and is then chemically cured to provide the locking action.

Unless a specific repair procedure states otherwise, encapsulated bolts may be reused providing the threads are undamaged and the following procedure is adopted:

- Remove loose adhesive from the bolt and housing threads.
- Ensure threads are clean and free of oil and grease.
- Apply an approved locking agent.

An encapsulated bolt may be replaced with a bolt of equivalent specification provided it is treated with an approved locking agent.

Self-locking Bolts and Screws

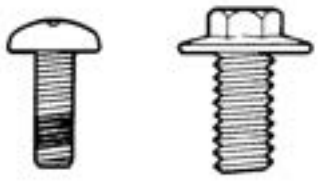

S003046

Self-locking bolts and screws, i.e. nylon patched or trilobular thread can be reused providing resistance can be felt when the locking portion enters the female thread.

Nylon patched bolts and screws have a locking agent pre-applied to the threads. They are identified by the presence of a coloured section of thread which extends for up to 180° around the thread.

Trilobular bolts (i.e. Powerlok) have a special thread form which creates a slight interference with the thread of the hole or nut into which it is screwed.

DO NOT reuse self-locking bolts or screws in critical locations. Always use the correct replacement self-locking nut, bolt or screw.

DO NOT fit non self-locking fasteners in applications where a self-locking nut, bolt or screw is specified.

Nut Identification

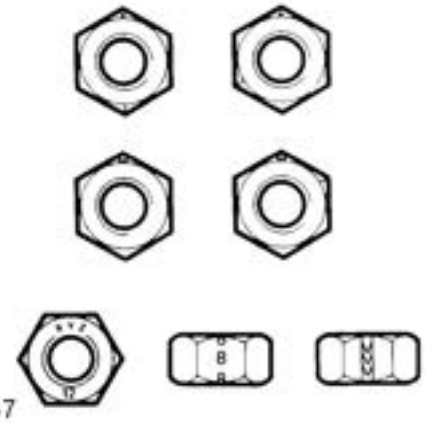

S003047

A nut with an ISO metric thread is marked on one face or on one of the flats of the hexagon with the strength grade symbol 8, 12, or 14. Some nuts with a strength grade 4, 5 or 6 are also marked and some have the metric symbol M on the flat opposite the strength grade marking.

When tightening a slotted or castellated nut, never loosen it to insert a split pin except where recommended as part of an adjustment. If difficulty is experienced, alternative washers or nuts should be selected, or the washer thickness reduced.

Where bearing preload is involved, nuts should be tightened in accordance with special instructions.

Self-locking Nuts

S003048

Self-locking nuts can be reused providing resistance can be felt when the locking portion of the nut passes over the thread of the bolt or stud.

Where self-locking nuts have been removed, it is advisable to replace them with new ones of the same type.

Don't use non self-lock nuts in the area where self-lock nuts must be used.

Flexible Pipes and Hoses

Overview

When removing and refitting flexible hydraulic pipes and hoses, ensure that the following practices are observed to ensure component serviceability.

- Clean end fittings and the area surrounding them as thoroughly as possible.
- Obtain appropriate plugs or caps before detaching hose end fittings, so that the ports can be immediately covered to prevent the ingress of dirt.
- Clean hose externally and blow through with compressed air. Examine carefully for cracks, separation of plies, security of end fittings and external damage. Reject any faulty hoses.
- When refitting a hose, ensure that no unnecessary bends are introduced, and that hose is not twisted before or during tightening of union nuts.
- Fit a cap to seal a hydraulic union and a plug to its socket after removal to prevent ingress of dirt.
- Absolute cleanliness must be observed with hydraulic components at all times.
- After any work on hydraulic systems, carefully inspect for leaks underneath the vehicle.

Flexible Pipes

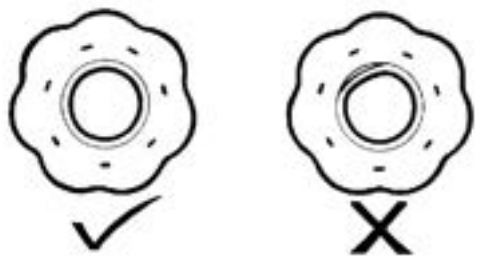

S003049

All flexible pipes are made up of two laminations, an armoured rubber outer sleeve and an inner viton core. If any of the flexible pipes has been disconnected, it is imperative that the internal bore is inspected to ensure that the viton lining has not become separated from the armoured outer sleeve. A new flexible pipe must be fitted if separation is evident.

Cooling System Hoses

The following precautions MUST be followed to ensure that integrity of cooling system hoses and their connections to system components are maintained.

Hose Orientation and Connection

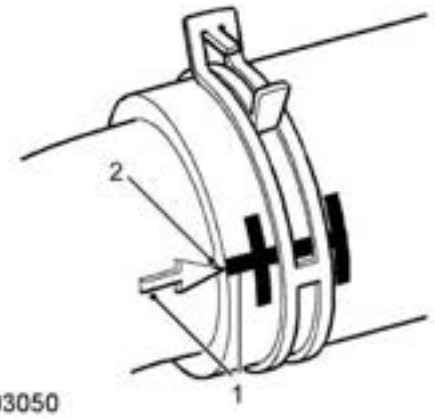

S003050

Correct orientation of cooling hoses is important in ensuring that the hose does not become scratched or damaged through contact with adjacent components. Where "timing" marks (1) are provided on the hose and corresponding connection, these must be used to ensure correct orientation. Hoses must be pushed fully onto their connection points. Usually, a marking (2) on the pipe end provides a positive indicator.

Hose Clip

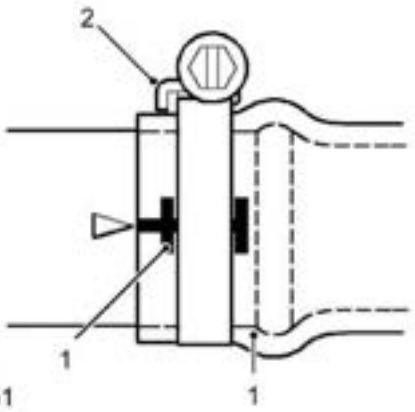

S003051

Markings (1) are usually provided on the hose to indicate the correct clip position. If no markings are provided, position the clip directly at the location as shown in above figure. Worm drive clips should be oriented with the crimped side of the clip bracket (2) facing towards the end of the pipe, or the hose may become pinched between the clip and the pipe. Worm drive clips should be tightened to 3 Nm unless otherwise stated. Ensure that hose clips do not foul adjacent components.

Thermal Protection

Always ensure that heat shields and protective sheathing are in good condition. Replace if damage is evident. Particular care must be taken when routing pipelines close to hot components. Hoses will relax and deflect slightly when hot; ensure this movement is taken into account when routing and securing hoses.

Fuel Handling Precautions

Overview

Fuel vapour is highly flammable and in confined spaces is also explosive and toxic. The vapour is heavier than air and will always fall to the lowest level. The vapour can be easily distributed throughout a workshop by air currents; consequently, even a small spillage of fuel is potentially very dangerous.

The following information provides basic precautions which must be observed if fuel is to be handled safely. It also outlines other areas of risk which must not be ignored. This information is issued for basic guidance only, if in doubt, consult your local Fire Officer.

Always have a fire extinguisher containing FOAM, CO2, GAS or POWDER close at hand when handling or draining fuel or when removing fuel systems. Fire extinguishers should also be located in areas where fuel containers are stored.

Always disconnect the vehicle battery before carrying out removing or draining work on a fuel system.

Whenever fuel is being handled, drained or stored, or when fuel systems are being removed, all forms of ignition must be extinguished or removed; any work lamps must be flameproof and kept clear of spillage.

Warning : No one should be permitted to repair components associated with fuel without first having specialist training.

Warning : Do not remove fuel system components while the vehicle is over a pit.

Fuel Tank Draining

Fuel tank draining should be carried out in accordance with the procedure outlined in the FUEL DELIVERY section of this manual and observing the following precautions.

Warning : Do not remove fuel system components while the vehicle is over a pit. Extraction or draining of fuel must be carried out in a well ventilated area.

The capacity of containers must be more than adequate for the amount of fuel to be extracted or drained. The container should be clearly marked with its contents and placed in a safe storage area which meets the requirements of local authority regulations.

Fuel Tank Remove

When the fuel pipe is secured to the fuel tank outlet by a spring steel clip, the clip must be released before the fuel pipe is disconnected or the fuel tank is removed. This procedure will avoid the possibility of fumes in the fuel tank being ignited when the clip is released.

As an added precaution, fuel tanks should have a 'FUEL VAPOUR' warning label attached to them as soon as they are removed from the vehicle.

Fuel Tank Repairs

No attempt should be made to repair a plastic fuel tank. If the structure of the tank is damaged, a new tank must be fitted.

Body Repairs

Plastic fuel pipes are particularly susceptible to heat, even at relatively low temperature, and can be melted by heat conducted from some distance away.

When body repairs involve the use of heat, all fuel pipes which run in the vicinity of the repair area must be removed, and the tank outlet plugged.

Warning : If welding is to be carried out in the vicinity of the fuel tank, the fuel system must be drained and the tank removed before welding commences.

Electrical Precautions

Overview

The following guidelines are intended to ensure the safety of the operator while preventing damage to the electrical and electronic components fitted to the vehicle. Where necessary, specific precautions are detailed in the individual procedures of this manual.

Equipment

Prior to commencing any test procedure on the vehicle, ensure that the relevant test equipment is working correctly and any harness or connectors are normal. It is particularly important to check the condition of the leads and plugs of the operating equipment.

Polarity

Never reverse connect the vehicle battery and always ensure the correct polarity when connecting test equipment.

High Voltage Circuits

Whenever disconnecting live HT circuits, always use insulated pliers and never allow the open end of the HT lead to contact any components.

Connectors and Harnesses

The front compartment of a vehicle is a particularly hostile environment for electrical components and connectors:

- Always ensure electrically related items are dry and oil free before disconnecting and connecting test equipment.
- Ensure disconnected multiplugs and sensors are protected from being contaminated with oil, coolant or other solutions. Contamination could impair performance or result in catastrophic failure.
- Never force connectors apart by using tools to prise apart or by pulling on the wiring harness.
- Always ensure locking mechanism is disengaged before disconnection, and match orientation to enable correct reconnection.
- Ensure that any protection (covers, insulation etc.) is normal and replaced if damaged.

Having confirmed a component to be faulty:

- Turn off the power system, and disconnect the negative battery cable.
- Remove the component and support the disconnected harness.
- When replacing the component, keep oily hands away from electrical connection areas, and push connectors home until any locking tabs fully engage.

Battery Disconnection

Before disconnecting the battery, disable the alarm system and switch off all electrical equipment.

Caution : To prevent damage to electrical components, always disconnect the battery when working on the vehicle electrical system. The ground lead must be disconnected first and reconnected last.

Caution : Always ensure that battery leads are routed correctly without any potential hazards.

Battery Charging

Always ensure any battery charging area is well ventilated and that every precaution is taken to avoid naked flames and sparks.

Disciplines

Turn off the power system before connecting or disconnecting other systems to prevent electrical surges caused by disconnecting "live" connections from damaging electronic components.

Ensure hands and work surfaces are clean and free of grease, swarf, etc. Grease collects dirt which can cause electric leakage (short circuit) or open circuit.

Connectors should never be subjected to forced removal or refit, especially internal connectors. Damaged circuits can cause short-circuit and open-circuit fault conditions.

Prior to commencing test, and periodically during a test, touch a good vehicle body to discharge static electricity. Some electronic components are vulnerable to the static electricity that may be generated by the operator.

When handling printed circuit boards, treat with care and hold by the edges only; note that some electronic components are susceptible to body static electricity.

Electrical Connectors Lubrication

In order to prevent corrosion, some connectors under bonnet and vehicle body are applied with special grease during vehicle production process. If these are destroyed in maintaining, repair and replacing process, special lubricant should be newly applied.

Supplementary Restraint System Precautions

General Precautions

The SRS system contains components which could be potentially hazardous to the service engineer if not serviced and handled correctly. The following guidelines are intended to alert the service engineer to potential sources of danger and emphasise the importance of ensuring the integrity of components fitted to theSRS .

Warning : It is imperative that the appropriate information is read thoroughly before any work is undertaken on the SRS system.

Warning : It is imperative that the appropriate information is read thoroughly before any work is undertaken on the SRS system.

Warning : The airbag module contains sodium azide which is poisonous and extremely flammable. Contact with water, acid or heavy metals may produce harmful or explosive compounds. Do not dismantle, incinerate or bring into contact with electricity, before the airbag is deployed.

Warning : When a seat belt has withstood the strain of a severe vehicle impact or shows signs of wear, immediately replace it with a new one.

Warning : Always disconnect the vehicle battery before carrying out any electric welding on a vehicle fitted with an SRS system.

Caution : Do not expose an airbag module or seat belt pre-tensioner to heat exceeding 85℃.

It should be noted that these precautions are not restricted to operations performed when servicing theSRS system, the same care must be exercised when working on ancillary systems and components located in the vicinity of theSRS components. these include, but are not limited to:

- Steering system - driver side front airbag module, rotary coupler
- Instrument panel - passenger side front airbag module
- Interior trim -ICS head curtain airbags ('A' pillar trim, 'B' pillar trim, grab handles, headlining above front doors);SRS diagnosis control unit (beneath centre console); side impact sensors (inside the body sill frame)
- Seats - side airbags; front seat belt pre-tensioners
- Electrical system -SRS harness, link leads and connectors

Making the System Safe

Before working on, or in the vicinity ofSRS components, ensure the system is rendered safe by performing the following procedures:

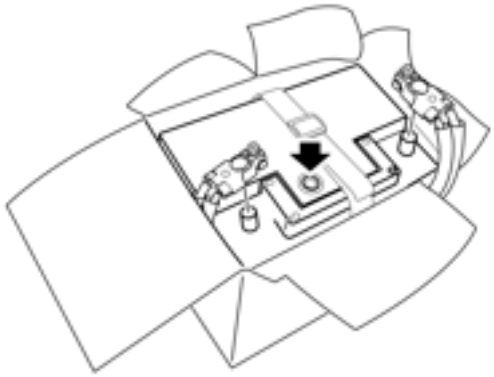

S003092

- Turn off the power system.
- Disconnect the negative battery cable first, and then the positive.
- Wait 10 minutes forSDM back-up power circuit to discharge.

TheSRS system uses energy storage capacitors to keep the system active in the event of electrical supply failure under crash conditions. It is necessary to allow the capacitor sufficient time to discharge (at least 10 minutes) in order to avoid the risk of accidental deployment.

Caution : Disconnect the battery before starting the SRS operation. Disconnect the negative battery cable first. DO NOT disconnect the battery in the reverse order.

Refit

In order to ensure system integrity, it is essential that theSRS is regularly checked and maintained so that it is ready for effective operation in the event of a collision. Carefully inspectSRS components before refit. Do not fit a part that shows signs of being dropped or improperly handled, such as dents, cracks or deformation.

Warning : The integrity of the SRS system is critical for safety reasons.

Ensure the following precautions are always adhered to:

- Never fit usedSRS components from another vehicle or attempt to repair anSRS component.
- Never use theSRS components without a clear identification label.
- Never use an airbagSRS or ECU that has been dropped.
- When repairing anSRS , only use genuine new parts.
- Never apply electrical power to anSRS component unless instructed to do so as part of an approved test procedure.
- Ensure the screws are tightened to the correct torque. Always use new fasteners when replacingSRS components.
- Ensure that theSRS ECU is fitted correctly. There must not be any gap between theSRS ECU and the bracket to

which it is mounted. An incorrectly mountedSRS ECU could cause the system to malfunction.

- Do not supply power to theSRS ECU before allSRS components are connected.

Caution : Ensure SRS components are not contaminated by oil, grease, detergent or water.

Caution : Torque wrenches should be regularly checked for accuracy to ensure that all fasteners are tightened to the correct torque.

Caution : After seat belt pre-tensioner works, the seat belts can still be used as conventional seat belts, but will need to be replaced as soon as possible to re-establish full SRS protection.

Caution : If the SRS component is to be replaced, the bar code of the new component must be recorded.

SRS Component Test Precautions

SRS components are triggered using relatively low operating currents, always adhere to the following precautions:

Warning : Do not use a multi-meter or other general purpose test equipment on SRS system components, or accidental deployment may occur. Only use the recommended diagnostic equipment to diagnose system faults.

Warning : Do not use electrical test equipment on the SRS harness while it is connected to any of the SRS system components. It may cause accidental deployment and personal injury.

Handling and Storage

Always comply with the following handling precautions:

Warning : The SRS components are sensitive and potentially hazardous if not handled correctly; always comply with the following handling precautions:

• SRS ECU and airbag module must be stored in a dry environment at normal temperature not exceeding 85 °C. Ensure heat source, fire source, water and other corrosive chemical substances are kept away from the stored SRS components.

• For safety, inflammable objects shall not be placed around the airbag module.

• New airbag module shall be kept in original packaging state until fitted.

• The storage area must comply with all legal requirements. Enough fire extinguishers or other extinguishing devices must be provided.

• It is forbidden to use the dropped airbag module and SRS ECU at will. An airbag module and SRS ECU dropped on the ground must be scrapped.

• Do not hold the airbag module wire or connector with hands when handling undeployed airbag module.

• It is forbidden to disassemble the undeployed airbag module or damage the sealed airbag module metal case.

• Never carry airbag module or seat belt pre-tensioner in the compartment.

Warning : Never attach anything to an airbag cover or any object to an airbag module. Do not allow anything to rest on top of an airbag module.

Caution : Do not apply grease or cleaning solvents to seat belt pre-tensioner units, otherwise it may cause component failure.

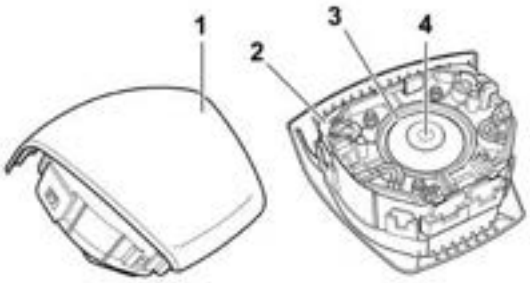

S003082

Warning : Store the airbag module with the deployment side facing up. If it is stored with the deployment side facing down, accidental deployment of airbag will cause personal injury.

Warning : Airbag modules and seat belt pre-tensioners are classified as explosive devices. For overnight and longer term storage, they must be stored in a secure steel cabinet which has been approved as suitable for the purpose and has been registered by the local authority.

Warning : When recycling or handling the seat belt pre-tensioner, DO NOT aim the piston pipe at yourself or others. Keep the pistons facing the ground. Hold the case instead of the seat belt.

Warning : Store the airbag module or seat belt pre-tensioners in a designated storage area.

Caution : Improper handling or storage can internally damage the airbag module, making it inoperative. If you suspect the airbag module has been damaged, fit a new module and refer to the Deployment/Disposal Procedures for disposal of the damaged module.

SRS Harnesses and Connectors

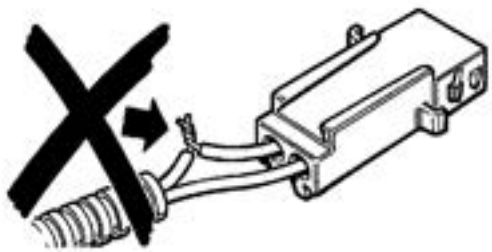

S003005

Always observe the following precautions with regards toSRS harnesses:

- Never attempt to modify, splice or repairSRS harnesses.
- Never fit extra electronic equipment (such as a mobile telephone, two-way radio or in-car entertainment system) in such a way that it could generate electromagnetic interference in the airbag circuit. Seek specialist advice when fitting such equipment.

Note : SRS harness can be identified by a special yellow sleeve which plays the role of protecting the harness (black with yellow stripe protective sleeve is sometimes used).

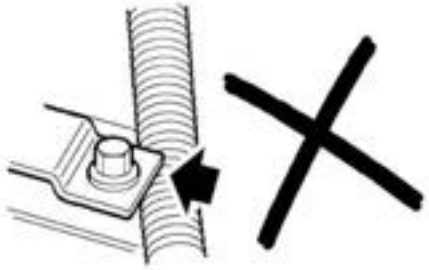

S003006

Warning : Always ensure SRS harness is routed correctly. Be careful to avoid trapping or pinching the SRS harness. Do not leave the connectors hanging loose or allow SRS components to hang from their harnesses. Check for possible points of chafing.

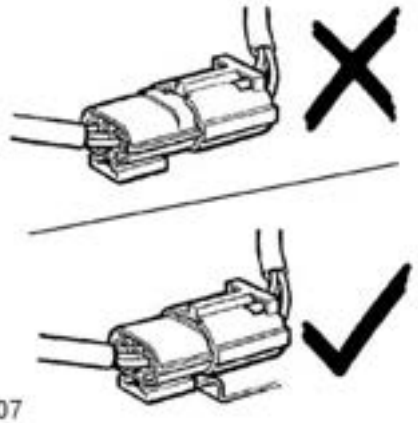

S003007

Precautions for Vehicle Owners

For the airbag to work effectively and protect vehicle owners, follow the precautions listed below.

Driver and passengers must use seat belts correctly. Correctly using the seat belts can protect the body and reduce injuries in the event of an accident.

Never fit any accessory that obstructs or impairs the operation of the seat belt pre-tensioners or airbags.

Do not place any object on the steering wheel or instrument panel that could penetrate an inflating airbag or be a thrown item likely to cause injury.

Never fit cover on seat which fitting side airbag.

Children under 12 years old should not sit in the front seat.

Only genuine accessory parts are allowed to be fitted.

Only authorised people can remove airbag modules,SRS ECU ,SRS harnesses and connectors.

If the airbag and seat belt pre-tensioner are deployed during an accident,SRS must be replaced and discarded.

EverySRS on every car has been paired and identified, illegally adding or modifying theSRS and harnesses could cause injuries.

Modifying the vehicle structure orSRS is strictly prohibited and may cause wrong airbag deployment or failure to deploy when required.

Rotary Coupler Precautions

Caution : Always follow the procedure for fitting and checking the rotary coupler as instructed in the SRS repairs section. Comply with all safety and installation procedures to ensure the system functions correctly.

Observe the following precautions:

- Do not unlock and rotate the rotary coupler when it is removed from the vehicle.
- Do not turn the wheels when the rotary coupler is removed from the vehicle.
- Always ensure the rotary coupler is removed and refitted in its central position and with the front wheels in the straight ahead position - refer to theSRS repair section for the correct removal and refit procedure.
- If a new rotary coupler is being fitted, ensure the locking tab holding the coupler's rotational position is not broken; units with a broken locking tab should not be used.

Warning Labels

Warning labels are displayed at various positions in the vehicle.SRS components have additional warning labels displayed on them to indicate that particular care is needed when handling them. These include airbag modules,SRS ECU , seat belt pre-tensioners and the rotary coupler.

The following warning symbols may be displayed at various locations on the vehicle:

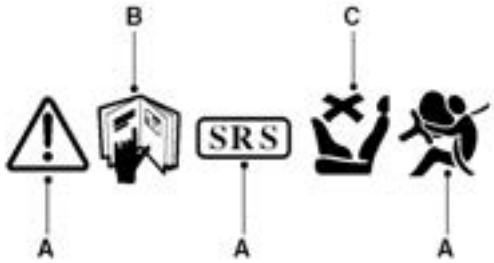

S003008

A. Be careful when working in close proximity toSRS components.

B. Refer to the publication where the procedures, instructions and advice can be found (usually Workshop Manual or Owner's Manual) for working on theSRS .

C. Do not use rear facing child seats in the front passenger seat of vehicles fitted with passenger airbags.

Warning : It is imperative that the appropriate information is read thoroughly before any work is undertaken on the SRS system.

The following figure indicates possible locations and content for warning labels. Exact positions and content may vary dependent on model year, legislation and market trends.

S003009

Do not use rear facing child seats in the front passenger seat of vehicles fitted with passenger airbags.

Rotary Coupler

1. Be careful when working in close proximity toSRS components.
2. Refer to Workshop Manual for detailed instructions.
3. Ensure the wheels are in the straight ahead position before removal and refitting.
4. Bar code. The code number must be recorded if the rotary coupler is to be replaced.

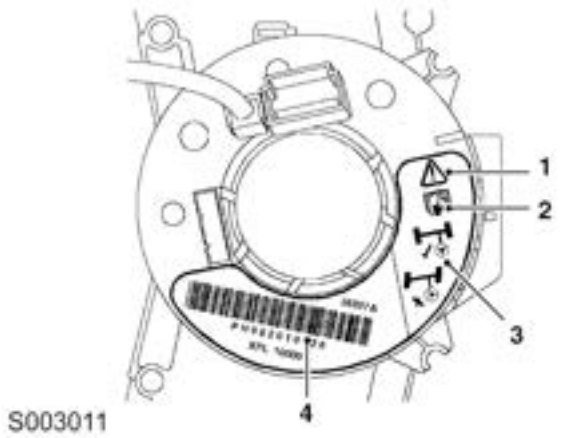

Bar Codes

Bar codes are fitted toSRS components and components which are critically related toSRS operation. The code number(s) must be recorded if the component is to be replaced.

Components featuring bar codes include the following:

- Driver's front airbag module – label attached to rear of airbag module housing.
- Passenger front airbag module – label attached at side of airbag module housing
- SRS ECU – including label on top ofSRS ECU .
- Rotary coupler - several labels on front face.

Roadside Assistance

Traction -SRS component not deployed

Normal towing procedures are unlikely to cause an airbag to deploy. However, as a precaution, turn off the power system and then disconnect both battery poles. Disconnect the negative '-' lead first.

Traction -SRS component not deployed

Once the driver's airbag has been deployed, the vehicle must have a suspended tow. However, as a precaution, turn off the power system and then disconnect both battery poles. Disconnect the negative '-' lead first.

SRS components deployed

If a vehicle is to be scrapped and contains an undeployed airbag module, the module must be manually deployed.

Always observe the following precautions:

Warning : Only personnel who have undergone the appropriate training should undertake deployment of airbag and seat belt pre-tensioner modules.

Warning : A deployed airbag or seat belt pre-tensioner is very hot, which should be cooled down for at least 30 minutes.

Warning : Only use approved deployment equipment, and only deploy SRS components in a well-ventilated area. Ensure SRS components are not damaged or ruptured before deployment.

Warning : Contact with chemicals from deployed and damaged SRS components could present a health hazard; wear protective clothing when handling them. DO NOT eat, drink or smoke when handling SRS components.

Warning : Deployment of airbag modules and seat belt pre-tensioners can cause injury to personnel in the close vicinity of the deploying unit. In case of injury, seek urgent medical advice. Possible sources of injury include:

• Impact - due to component deployment caused by operation on airbag module or seat belt pre-tensioner.

• Hearing damage - due to noise produced by deploying airbag module or seat belt pre-tensioner.

• Burns - due to hot component parts and gases.

• Irritation to eyes and lungs - due to gases or combustion residue during deployment.

Warning : The following precautions MUST be followed:

• Only use approved deployment tool to carry out this operation.

• Before commencing any deployment procedure, ensure the deployment tool functions properly.

• Deployment of any airbag/pre-tensioner modules should be performed in a well ventilated area which has been designated for the purpose.

• Ensure the airbag/pre-tensioner modules are not damaged or ruptured before deployment.

• Notify the relevant authorities of intention to deploy airbag and pre-tensioner units.

• When deploying any airbag and seat belt pre-tensioner units, ensure that all personnel are at least 15 metres away from the deployment zone.

• When deploying seat belt pre-tensioners in the vehicle, ensure the pre-tensioner unit is fully secured to its fixing point.

• When removing deployed airbag and seat belt pre-tensioner modules, wear protective clothing. Use gloves and seal deployed units in a plastic bag.

• After any component of the SRS system is deployed, all SRS components must be replaced. DO NOT re-use or repair any parts of the SRS system.

• Do not lean over airbag modules or seat belt pre-tensioner units when connecting deployment equipment.

SRS Component Replacement Policy

Impacts Which Do Not Deploy the Airbags or Pre-tensioners

Check for structural damage in the area of the impact, paying particular attention to bumpers, longitudinal beams, anti-collision beams and bracketry.

Impacts Which Deploy the Airbags or Pre-tensioners

The replacement and inspection policy is dependent on the type and severity of the crash condition. The following guidelines are the basic precautions for deployment ofSRS components:

Front Seat Side Airbag Deployment (driver and passenger)

If the front seat side airbags are deployed, the following parts must be replaced:

- Driver seat side airbag module
- Passenger seat side airbag module
- Cables connecting front seat airbag modules toSRS harness
- Seat Belt Pre-tensioners
- Driver's seat belt retractor
- Rotary coupler
- SDM

In addition, the following should be inspected for damage and replaced as necessary:

- Front passenger's seat belt retractor (webbing, tongue latching, 'D' loop, body anchorage point)
- Rear seat belt buckles (webbing, buckle covers, body anchorage and tongue latching function)
- Instrument panel adjacent to passenger airbag module
- Steering wheel (if damage is evident)
- Front seat frames and head restraints (if there is evidence of damage to the seat frame or cushion pan)
- Steering column (if adjustment is lost or there are signs of collapse)
- Seat belt height adjusters on 'B' pillar
- Rear seat belt escutcheons in parcel shelf trim

Side (Thorax) Airbags

If the side (thorax) airbags are deployed, the following parts must be replaced, on the side of the vehicle on which the deployment occurred:

- Seat (thorax) airbag module
- Seat cushion foam
- Seat cushion cover
- Front seat belt buckle pre-tensioners
- SDM
- Side impact crash sensors (both sides of vehicle)

In addition, the following should be inspected for damage and replaced as necessary:

- Front seat belts (retractors, webbing, tongue latching, 'D' loop and body anchorage points)
- Rear seat belt buckles (webbing, buckle covers, tongue latching and body anchorage points)
- Front seat frame (if there is evidence of external or airbag deployment damage to seat frame)
- 'B' pillar interior trims and fasteners
- Door casings
- Seat belt height adjusters on 'B' pillar
- Rear seat belt escutcheons in parcel shelf trim

Inflatable Curtain Structure (ICS) Airbag Modules

If theICS airbag modules are deployed, the following parts on the side of the vehicle for which deployment occurred must be replaced:

- ICS Airbag Modules
- Connecting wire between the airbag gas generator and theSRS harness
- Airbag retaining clips above window aperture
- 'A' pillar interior trims
- Front seat belt buckle pre-tensioners
- SDM
- Side impact crash sensors (both sides of vehicle)

In addition, the following should be inspected for damage and replaced as necessary:

- Headlining
- ICS mounting bracket
- Alarm sensor
- Front seat belts (retractors, webbing, tongue latching, 'D' loop and body anchorage points)
- Rear seat belt buckles (webbing, buckle covers, tongue latching and body anchorage points)
- 'B' pillar upper trims and fasteners
- Door casings
- Seat belt height adjusters on 'B' pillar
- Rear seat belt escutcheons in parcel shelf trim

Rear Impacts

Rear impacts may cause the seat belt pre-tensioners to deploy. If this occurs, all pre-tensioner units must be replaced. In addition, the following components should be inspected for damage and replaced as necessary:

- Front seat frames
- Seat belt height adjusters on 'B' pillar

- Front seat belts (retractors, webbing, tongue latching, 'D' loop and body anchorage points)
- Rear seat belt buckles (webbing, buckle covers, tongue latching and body anchorage points)
- Rear seat belt escutcheons in parcel shelf trim
- SDM

Periodic Replacement of SRS Components

The performance of the propellants within airbags and pre-tensioners will deteriorate over a period of time. As a result, it is essential that the airbags and pre-tensioners are periodically replaced to maintain occupant safety. The airbag, seat belt pre-tensioner and rotary coupler shall be replaced every 10 years.

Air Conditioning System Precautions

Overview

The air conditioning system contains fluids and components which could be potentially hazardous to the service engineer or the environment if not serviced and handled correctly. The following guidelines are intended to alert the service engineer to potential sources of danger and emphasise the importance of ensuring the integrity of the air conditioning operating conditions and components fitted to the vehicle.

Where necessary, additional specific precautions are detailed in the relevant sections of this Manual which should be referred to prior to commencing repair operations.

Warning : Servicing must only be carried out by personnel familiar with both the vehicle system, the charging and testing equipment. All operations must be carried out in a well ventilated area away from open flame and heat sources.

Warning : Air conditioning refrigerant is a hazardous liquid, and when handled incorrectly, it can cause serious injury. Suitable protective clothing, consisting of face protection, heat proof gloves, rubber boots and rubber apron or waterproof overalls, must be worn when carrying out operations on the air conditioning system.

Remedial Actions

If an accident involving A/C refrigerant should occur, conduct the following remedial actions:

- If the A/C refrigerant liquid enters the eye, do not rub it. Gently run large quantities of eye wash over affected eye to raise the temperature. If an eye wash is not available, cool clean water may be used to flush the eye. After rinsing, cover the eye with a clean pad and seek immediate medical attention.
- If the A/C refrigerant liquid is splashed onto the skin, run large quantities of water over the affected area to raise the temperature. Implement the same action if the skin comes in contact with discharging cylinders. Wrap the contaminated body parts in blankets (or similar materials) and seek immediate medical attention.
- If the debilitating effects of inhalation of the A/C refrigerant vapour is suspected, seek fresh air. If the affected person is unconscious, move them away from the contaminated area to fresh air and apply artificial respiration and/or oxygen and seek immediate medical attention.

Warning : Due to its low evaporating temperature, air conditioning refrigerant must be handled with care. Air conditioning refrigerant splashed on any part of the body will cause immediate freezing of that area. Also, refrigerant tanks and replenishment trolleys when discharging will freeze skin if skin contacts with discharged fluid.

Service Precautions

Observe the following precautions when handling components used in the air conditioning system:

- Air conditioning units must not be lifted by their hoses, pipes or capillary lines.
- Hoses and lines must not be subjected to any twist or stress; the efficiency of the system will be impaired by kinks or restrictions. Ensure that hoses are correctly positioned before tightening couplings, and ensure that all clips and supports are utilised.
- Flexible hoses should not be positioned close to the hot components (no less than 100 mm) unless protected by heat shielding.
- Completed assemblies must be checked for refrigeration lines touching metal panels. Any direct contact of components and panels may transmit noise and so must be eliminated.
- The appropriate torque wrench must be used when tightening refrigerant connections to the stipulated value. An additional spanner must be used to hold the union to prevent twisting of the pipe when tightening connections.
- Before connecting any hose or pipe, ensure that refrigerant oil is applied to the seat of the new O-rings, BUT NOT to the threads of the connection.
- All air conditioning system components must be stored under seal until immediately prior to connection.
- Ensure components are at room temperature before uncapping, to prevent condensation of moisture from the air that enters it.
- Components must not remain uncapped for longer than 15 minutes. In the event of a delay, the sealing component must be fitted.
- When disconnecting, immediately cap all air conditioning pipes to prevent ingress of dirt and moisture into the system.
- The receiver/drier contains desiccant which absorbs moisture. It must be positively sealed at all times. A receiver/drier that has been left uncapped must not be used, and fit a new unit.
- The receiver/drier should be the last component connected to the system to ensure optimum dehydration and maximum moisture protection of the system.

- Whenever the refrigerant system is opened, the desiccant must be renewed immediately before refilling the refrigerant.
- Use alcohol and a clean lint-free cloth to clean dirty connections.
- Ensure that all new parts fitted are marked for use with A/C refrigerant.

Refrigerant Oil

Refrigerant oil easily absorbs water and must not be stored for long periods. Do not pour unused refrigerant oil back into the container. Always use an approved refrigerant oil.

When replacing components in the A/C system, drain the refrigerant oil from the component being replaced into a graduated container. On assembly, add the quantity of lubricating oil drained to the new component.

Compressor

A new compressor is sealed and pressurized with Nitrogen gas. When fitting a new compressor, slowly release the sealing cap; gas pressure should be heard to vent as the seal is broken.

Warning : Do not open the seal cover prior to connecting the air conditioning pipes to the compressor.

Rapid Refrigerant Discharge

If the air conditioning system is involved in accident damage and the system is punctured, the refrigerant will discharge rapidly. The rapid discharge of refrigerant will also result in the loss of most of the oil from the system. While removing the compressor, drain the remaining oil, and service as instructed in the air conditioning section of this manual.

Precautions for Refrigerant Recovery, Recycling and Recharging

When the air conditioning system is recharged, any existing refrigerant is first recovered from the system and recycled. The system is then charged with the required weight of refrigerant and volume of refrigerant oil.

Warning : Refrigerant must always be recycled before re-use to ensure that the purity of the refrigerant is high enough for safe use in the air conditioning system.

Warning : Recycling should always be carried out with equipment whose design is certified for compliance with SAE J1991. Other equipment may not recycle refrigerant to the required level of purity.

Warning : Air conditioning refrigerant Recovery Recycling Recharging Station shall not use any other type of refrigerant.

Warning : Air conditioning refrigerant from domestic and commercial sources shall not be used in motor vehicle air conditioning systems.

Warning : The system refrigerant must be evacuated immediately before recharging commences. Delay between evacuation and recharging is not permitted.

General Information

Air Conditioning Compressor Replacement

Replacement Instructions

A new compressor is supplied filled with a full charge of refrigerant oil. The new compressor must be drained and a calculated quantity of oil added before fitting. To calculate the quantity of oil to be added, carry out the following procedure:

1. Remove the filler/drain plug from the old compressor.
2. Invert the compressor and gravity drain the oil into a calibrated measuring cylinder. Ensure that the compressor is completely drained.
3. Record the quantity of oil drained, discard the oil.
4. Remove the filler/drain plug from the new compressor.
5. Invert the compressor and gravity drain the oil into a calibrated measuring cylinder. Ensure that the compressor is completely drained.
6. Add the same amount of oil drained from the old compressor to the new compressor.
7. Discard the remaining fluid drained from the new compressor.
8. Fit and tighten the compressor filler/drain plug.

Controller Maintenance Precautions

Warning : Please strictly follow the service manual and diagnostic tool's tips. In order to ensure the normal function of the vehicle, it must be ensured that the controller module is successfully refreshed before delivery.

Lifting and Towing

Lifting

Lifting Description

Before lifting the vehicle, note the followings:

- The vehicle shall be parked on a level and firm ground.
- Put the hand brake in place.
- Select P or N gear.

To avoid damage to the underbody parts, please follow the procedures below:

Do not put the jack or axle bracket under the following components:

- Body Structural Parts
- Bumper
- Fuel Pipeline
- Brake Pipeline
- Front Suspension Arm
- Steering Connecting Mechanism
- Rear Suspension Arm
- Fuel Tank
- Engine Oil Housing
- Transmission Housing
- Front Towing Eye

Note：Jacking and supporting the front of the vehicle should only be done under the customer front jacking points and/or the jacking bracket on the front section of the front subframe.

Front/Rear Supporting Point of the Vehicle

The jack of the vehicle is only applied to replace wheels in emergency. Do not use it for other purposes.

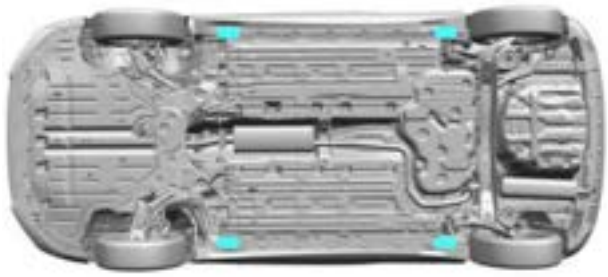

S0000495

If using the jack to replace wheels, ensure that the jack is placed on a solid level ground and under the supporting point near the wheel to be removed. Note: the round head of the jack must be in the corresponding slot on the baseplate.

Warning：Do not work on or under a vehicle supported only by a jack. Always support the vehicle on safety stands.

Warning：Do not commence work on the underside of the vehicle until suitable safety supports have been positioned under the sill reinforced brackets.

Lifting and Vehicle Supporting

Put the head of the jack at the lifting point of the front/rear door sill of the vehicle.

Caution：Do not jack or support the vehicle on any points other than those indicated, otherwise it may cause damage to the body or chassis components.

Warning：Do not commence work on the underside of the vehicle until suitable safety supports have been positioned under the sill reinforced brackets.

Warning：Always chock the wheels when jacking.

Hydraulic Jack

The hydraulic jack to be used must have a bearing capacity of at least 1,500kg (3,300lbs).

Column Lifter

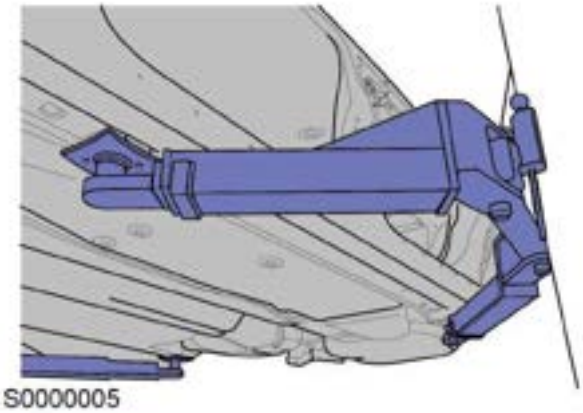

S0000005

Put the mat of the lifting arm of the lifter under the jacking point on the sill.

Roadside Assistance

Vehicle Towing

Towing Eye

Warning : DO not use a tow rope that is twisted - or the towing hook may be unscrewed.

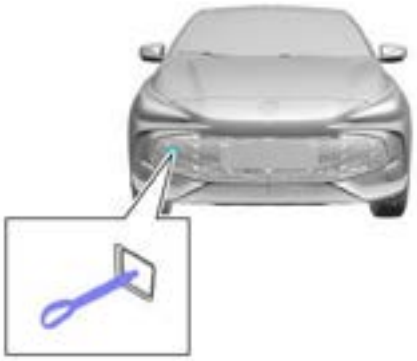

S0000492

Your vehicle has a towing hole at the front to fit the towing eye located in the toolbox, which is placed under the trunk carpet. Before fitting the front towing eye, remove the small cover on the bumper, and then pass the towing eye through the small hole and screw it into the threaded hole on the bumper beam. Ensure that the towing eye is fully tightened.

When a breakdown or accident occurs, you can use the towing eye as a towing point to tow your vehicle. However, you cannot use your vehicle to tow other vehicles. The vehicle can be towed by using a soft rope, but a hard rod is preferred.

Towing

Warning : If, due to an electrical fault, potential safety hazards may exist, it is not allowed to put the start switch in 'ON' position.

Warning : DO not suddenly start the towing car with great acceleration or accelerate to avoid damaging the car.

Warning : The towing speed of the vehicle shall not exceed 30km/h, the towing distance shall not exceed 50km.

Suspended Towing

If your vehicle needs to be towed, the best way is suspended towing. The driving wheels shall be off the ground during suspension, otherwise the transmission may be damaged. Meanwhile, the parking brake shall be released, the hazard warning lamps shall be switched on, and no passengers shall be left in the vehicle being towed.

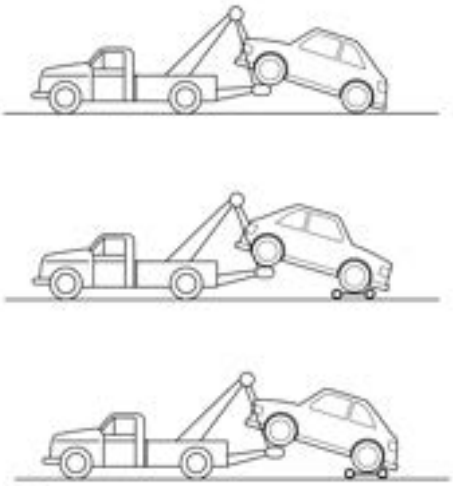

S0000424

Four-Wheel Touchdown Towing

If the vehicle is towed with four wheels on the ground, pay attention to the following:

1. Turn the start switch to "ON" position, so that the brake lamps, wipers and direction indicator lamps can be used.
2. Place the shift lever in Neutral position for manual transmission. Place the shift lever in "N" position for automatic transmission.
3. Release the parking brake.
4. Turn on the hazard warning lamp.
5. If the transmission is damaged or lack of lubricating oil, DO NOT tow the vehicle with four wheels on the ground.
6. Do not tow backwards.

Without the engine running, greater effort will be required to operate the brake pedal and turn the steering wheel. Longer braking distance will also be experienced.

Vehicle Shipping

If your vehicle needs to be shipped, a special transporter is recommended. The vehicle must be fixed on the transporter as follows:

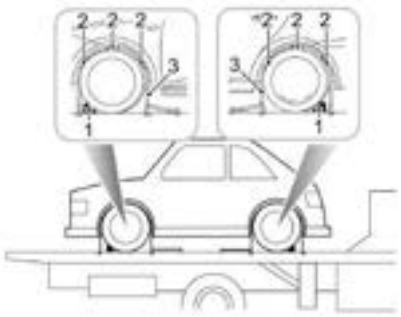

S0000423

- Apply the parking brake, and place the shift lever in Neutral position for manual transmission, or in "P" position for automatic transmission.
- Place the wheel chocks (1) as shown, and place the anti-slip rubber pads (2) around the tyres. Apply the parking brake, and place the shift lever in Neutral position for manual transmission, or in "P" position for automatic transmission.
- Fit the lashing straps (3) around the wheels and secure to the trailer. Tighten the straps to secure the vehicle.

Identification Number

Vehicle Identification Number

Vehicle Identification Number (VIN)

Example: LSJWP4392PS991500

Digit	Code	Description
1-3	LSJ	Manufacturer's Identifier
4-5	WP	Vehicle Model/ Type
6	4	Vehicle Body Structural Characteristics, 4 = Hatchback, 5 Doors
7	3	Engine, 3 = 1.5L Gasoline Engine
8	9	3 = Seat Belt, Front Airbags for Driver and Front Passenger 6 = Seat Belt, Front Airbags and Seat Side Airbags for Driver and Front Passenger 9 = Seat Belt, Front Airbags and Seat Side Airbags for Driver and Front Passenger, and Front/Rear Side Curtain Airbags
9	2	Check Bit (represented by any figure from 0 to 9 or letter X)
10	P	Model Year P= 2023
11	S	Assembly Plant, S = Lingang (Shanghai)
12-17	XXXXXX	6 figures = Serial number

VIN is also printed in the following locations:

On a plate behind the lower left corner of the windscreen.

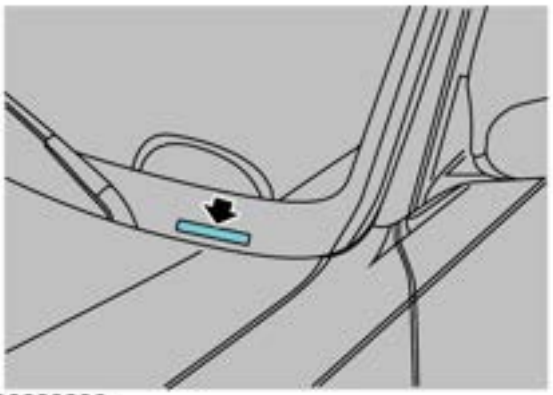

S0000006

On the floor below the right seat.

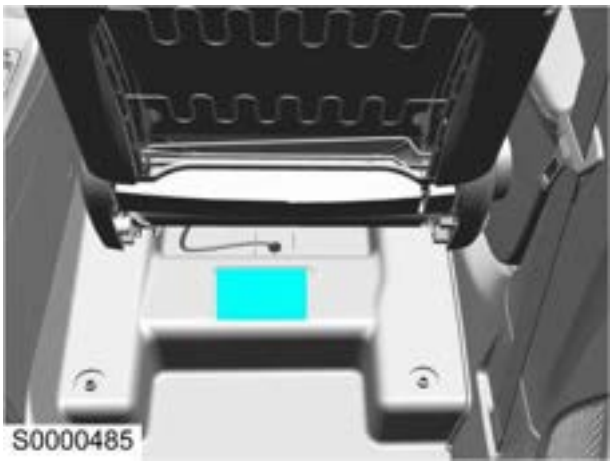

S0000485

Location of Vehicle Identification Plate

The VIN plate is located at the lower side of the right B pillar. For details, please refer to the specific VIN plate.

S0000557

Position of Other Signs

Engine Number (1.5L Engine - GS62H)

Printed on the front right part of the engine, as shown by the arrow.

Dual motor hybrid Transmission - HT11

Printed on the top surface of the front part of the transmission housing, as shown by the arrow.

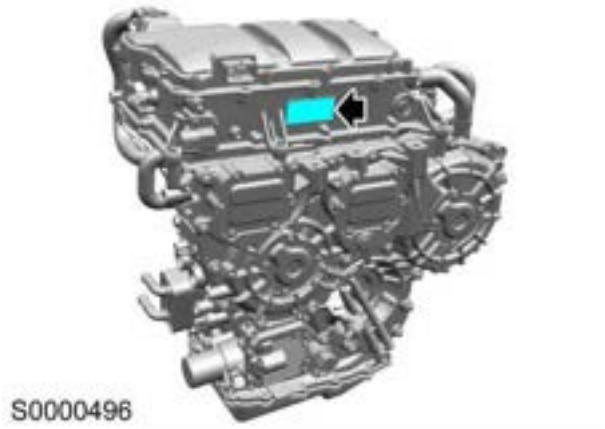

Maintenance & Lubrication

Capacity

Liquid Capacity

The following capacity values are merely approximate values for the corresponding system.

Component/System	Capacity
Fuel Tank:	36L/45L
Engine Oil	
Refill from Dry State:	4.5L
Refill during After-sales Maintenance:	4.0L
HT11 Transmission	
Refill from Dry State:	1.5L
Engine coolant：	6.4L
Drive motor coolant：	3.4L
Brake System Brake Fluid:	0.8L
Windscreen Washer Fluid:	2.L

Fluids

Fuel

Following recommended fluids must be applied:

Gasoline Engine - 1.5L

RON 95 # and above gasoline is recommended.

Coolant

Please be sure to use the coolant recommended and approved by SAIC Motor. Glycol (OAT) coolant is recommended.

In an emergency, a small amount of clean water may be added to the coolant reservoir. However, it should be noted that this will weaken the freeze and corrosion protection function and reduce the service life of the coolant. DO NOT refill the cooling system with anti-freeze of different formulations.

Adding additives that are not suitable for the vehicle to the coolant may damage the parts that need to be cooled. It is recommended to use additives approved by SAIC Motor.

Brake Fluid

Use brake fluid DOT 4 only.

Lubricating Fluids

Overview

The engine and other lubrication systems are filled with high-performance lubricating fluid to extend the service life.

Caution : Always use a high quality oil of the correctviscosity range in the engine. The use of oil of theincorrect specification can lead to high oil and fuelconsumption and ultimately to damaged components.

The use of the engine oil of recommended specifications containing additives may decrease the corrosive acid caused by combustion and prevent formation of residues. These residues may block the oil passage. Other engine oil additives should not be used. Repair and maintenance must be carried out within the specified interval.

Engine Oil

1.5L engines use oils that conform to C5&SP 0W-20 specification.

The engine oil viscosity/temperature range refers to the following table:

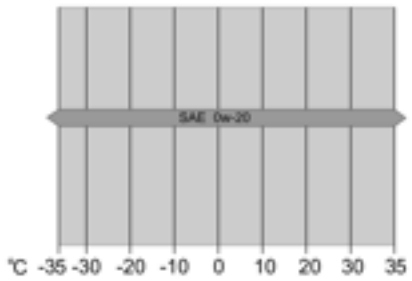

Transmission Fluid

Failure to use the specified transmission fluid may result in serious damage to the transmission.

Refill or fill up with Castrol BOT794 oil.

General Lubricating Grease

Use FN745/94 lubricating grease produced by Fuchs.

Bonnet Lock Body

Use FN745/94 lubricating grease produced by Fuchs.

Lock, Lock Body and Hinge

Do not apply any lubricating grease on the fixing end of the torsion bar spring, however, Kluber Isoflex Topas L32CN lubricating grease is recommended for its rotating end.

Washer Fluid

Use Original MG Motor windscreen washer fluid.

Engine Mechanical GS62H

Specification

Torque

Description	Value
Nut-Three Way Catalytic Converter to Middle Exhaust Pipe	19-25Nm
Bolt-Low Voltage Harness to PEU	7-10Nm
Nut-Earthing Wire to Body	7-10Nm
Bolt-Air Conditioning Line to Compressor	19-25Nm
Bolt-Lower Tie Rod Bracket to Transmission	(63-77) Nm+ (85-95) °
Bolt-Lower Tie Rod Bracket to Lower Tie Rod	(81-99) Nm+ (85-95) °
Bolt-Transmission Mount to Transmission	(63-77) Nm+ (85-95) °
Bolt-Transmission Mount to Body	(63-77) Nm+ (85-95) °
Nut-Transmission Mount to Body	54-66Nm
Bolt-Engine Mount to Engine	(63-77) Nm+ (85-95) °
Bolt-Engine Mount to Body	90-110Nm
Nut-Engine Mount to Body	55-65Nm
Bolt-Flywheel to Engine	(23-77) Nm+ (66-74) °
Stud	8-12Nm
Bolt-Cylinder Head to Cylinder Block	(37-43) Nm+ (236-244) °
Bolt-Oil Nozzle to Cylinder Block	8-12Nm
Bolt-Main Bearing Bush to Engine	30Nm+90°
Bolt-Connecting Rod Big Head Tile Cover to Connecting Rod Big Head	15Nm+ (86-94) °
Bolt-Crankshaft Oil Baffle to Engine	8-12Nm
Bolt-Oil Pan to Cylinder Block	8-12Nm
Bolt-Camshaft Cover to Engine	8-12Nm
Bolt-Exhaust Pipe Of Exhaust Gas Recirculation Module to Camshaft Cover	8-12Nm
Bolt-Differential Pressure Sensor Bracket to Camshaft Cover	8-12Nm
Nut-Engine Cooling Overflow Pipe Bracket to Camshaft Cover	8-12Nm
Screw-Upstream Oxygen Sensor Bracket to Camshaft Cover	8-12Nm
Bolt-Crankshaft Pulley to Engine	(95-105) Nm+ (146-154) °
Screw-Oil Ruler Pipe to Timing Front Cover	8-12Nm
Bolt-Timing Front Cover to Engine	27-33Nm
Screw-Oil Chain Cover to Timing Chain Cover	8-12Nm
Bolt-Right Guide Rail Of Timing Chain	8-12Nm
Bolt-Left Guide Rail Of Timing Chain	22-28Nm
Camshaft Phase Adjustment Actuator	(48-52) Nm+ (23-27) °
Bolt-Timing Chain Tensioner to Engine	8-12Nm
Bolt-Oil Pump Chain Tensioner to Engine	8-12Nm
Screw-Camshaft Bracket to Camshaft Cover	8-12Nm
Bolt-Intake Manifold to Engine	22-28Nm

Description	Value
Bolt-Connecting Rod Big Head Tile Cover to Connecting Rod	15Nm+ (85-95) °
Bolt-Oil Pump to Engine	8-12Nm
Bolt-Oil Pump Sprocket to Oil Pump	22-28Nm
Bolt-Oil Pump Control Valve Harness to Engine	8-12Nm
Bolt-Engine Coolant Overflow Pipe Bracket to Engine	8-12Nm
Nut-Engine Coolant Overflow Pipe Bracket to Engine	8-12Nm
Bolt-Oil Cooler to Engine	10-14Nm
Bolt-Water Pump to Engine	22-28Nm
Oil Filter Stud	36-44Nm
Oil Filter	23-29Nm
Drain Plug	50-55Nm
Bolt-Oil And Gas Separator to Engine	8-12Nm
Double Stud-Oil And Gas Separator to Engine	8-12Nm
Bolt-Engine Harness Ground Wire to Cylinder Block	11-15Nm
Bolt-Engine Harness Ground Wire to Camshaft Cover	7-10Nm
Nut-Engine Harness to Front Fuse Box	3.5-5.5Nm
Bolt-Engine Water Inlet to Engine	22-28Nm

Parameters

GS62 1.5L - Main Block

Model	1.5 L gasoline engine, with 16 valves, dual overhead camshaft, variable intake/exhaust cam timing
Cylinder Arrangement	4-cylinder, in-line, transverse, 1st cylinder at the front end of engine
Cylinder Bore Diameter	73.5mm
Stroke	88.1mm
Displacement	1495cm³
Ignition Sequence	1-3-4-2
Compression Ratio	12.2:1
Direction of Rotation	Clockwise when viewed from the front end of engine
Rated Power	90kW@6000rev/min
Maximum Torque	158Nm@4500rev/min
Idle Speed	720±50rev/min
Max. Engine Speed	6700rev/min
Weight	106.8kg

GS62 1.5L - Crankshaft

Crankshaft	
Crankshaft Axial Clearance Service Limit	0.205 ± 0.1mm 0.34mm
Main Bearing Bore Diameter: Grade A Grade B	53.690-53.700mm 53.680-53.690mm
Main Journal Tolerance: Grade 0 Grade 1 Crankshaft Connecting Rod Journal Diameter Max. Out-of-Roundness	49.993-50.000mm 49.992-49.984mm 43.000-42.984mm 0.005mm
Main Bearing Shell:	
Quantity	5 pieces each up and down
Model	Steel backed, alloy steel and top half bearing shell has oil passages.
Thrust Washer	Two halves of thrust washer on the left and right at the third main bearing shell, sticks to the thrust surface.
Thrust Washer Thickness	2.810-2.855mm
Bearing Clearance	0.026-0.070mm

GS62 1.5L - Cylinder Block and Piston

Cylinder Block:	
Material Type of Cylinder Liner Cylinder Liner Diameter	Cast Iron, HT250 No cylinder liner, honing process of spiral bevel gear motion 74.985-75.000mm
Cylinder Block Size Correction:	
Connecting Rod:	
Model Distance Between Centres	Fractured Connecting Rod, Material C70S6 143.7 ± 0.05mm
Piston Pin Model Fitted Connecting Rod Length	Full-floating type Clearance 44.8-45mm
Connecting Rod Bearing Shell:	
Clearance Axial Endplay	0.020-0.071mm 0.100-0.246mm
Piston:	
Model Piston Diameter: Tolerance in Piston Pin Bore Max. Ovality	Aluminum alloy, graphite finish, NANO anti-friction coated skirt surface, offset to piston pin during thermal expansion 74.941-74.959mm 0.005-0.013mm 0.002mm
Piston Ring:	
Model: Top Compression Ring Second Compression Ring Oil Ring	2 compression rings, 1 oil ring Half-barrel faced excircle, PVD treated surface Nose shaped, phosphate coated surface Three-piece oil ring, PVD treated blade
Tolerance between Piston Ring and Ring Groove: Top Compression Ring	0.040-0.080mm
Second Compression Ring Oil Ring	0.030-0.070mm 0.03-0.16mm
Piston ring gap clearance (measured at 20mm from cylinder liner bore): Top Compression Ring Second Compression Ring Oil Ring	0.20-0.30mm 0.40-0.60mm 0.20-0.70mm
Width of piston ring: Top Compression Ring Second Compression Ring Oil Ring	0.970-0.990mm 0.970-0.990mm 1.870-1.980mm

GS62 1.5L - Cylinder Head and Valve

GS62 1.5L - Cylinder Head and Valve	
Material	Aluminum Alloy
Cylinder Head Height: New Flatness	118.95-119.05mm 0.08mm
Camshaft:	
Model	Double overhead camshaft directly acted on mechanical tappet
Bearing	5 for each camshaft, in-line
Drive	Chain drive at crankshaft gear
Camshaft Axial Clearance: Service Limit	0.06-0.19mm 0.30mm
Bearing Clearance: Service Limit	First gear 0.025-0.066mm, last four gears 0.03-0.07mm 0.15mm
Mechanical Tappet:	
Model	Mechanical tappet, DLC coated surface, directly driven by camshaft
Outside Diameter of Mechanical Tappet	f 29.964mm-f 29.980mm
Valve Timing:	
Intake Valve: ON OFF Max. Lift	20.5°ATDC 78.5°BTDC 9.2mm
Exhaust Valve: ON OFF Max. Lift	54.5°BBDC 21°ATDC 8.1mm
Valve: Valve Stem Diameter: Intake Valve Exhaust Valve	f 4.967-f 4.981mm f 4.957-f 4.971mm
Clearance Between Valve Stem and Valve Guide: Intake Valve Exhaust Valve	0.019-0.053mm 0.029-0.063mm
Valve Stem Fit Height: New Intake Valve New Exhaust Valve Service Limit	50.033-50.893mm 49.948-50.808mm 0.26mm
Valve Head Diameter: Intake Valve Exhaust Valve	f 30.02-f 30.18mm f 25.6-f 25.8mm

Valve Seat Width Intake Valve Exhaust Valve Valve seat surface angle - intake valve & exhaust valve	1.1mm-1.3mm 1.369mm-1.828mm Intake 150°, 90°, 65° Exhaust 90°, 60°
Valve Surface Angle - Intake Valve & Exhaust Valve	45°
Valve Clearance	Intake Valve: 0.17-0.23mm Exhaust Valve: 0.27-0.33mm
Valve Spring: Free Length Mounting Length Assembly Load (L1=17mm) Intake Valve Open Load (L2=28mm)	44.7mm Intake side 33.6mm; Exhaust side 33.1mm Intake side 115±9.2Nm; Exhaust side 125±10Nm 297±14.8 N m
Exhaust Valve Open Load (L2=28mm)	291±14.6Nm

GS62 1.5L - Lubrication System

Oil Pump Model: Driving Type Oil Pump Axial Clearance Oil Pump Radial Clearance Free Length of Pressure Relief Valve Spring	Chain Drive 0.03-0.08mm 0.03-0.1mm 67.95±1mm
Oil Filter Model	Rotary Full-flow Oil Filter

Description and Operation

System Layout

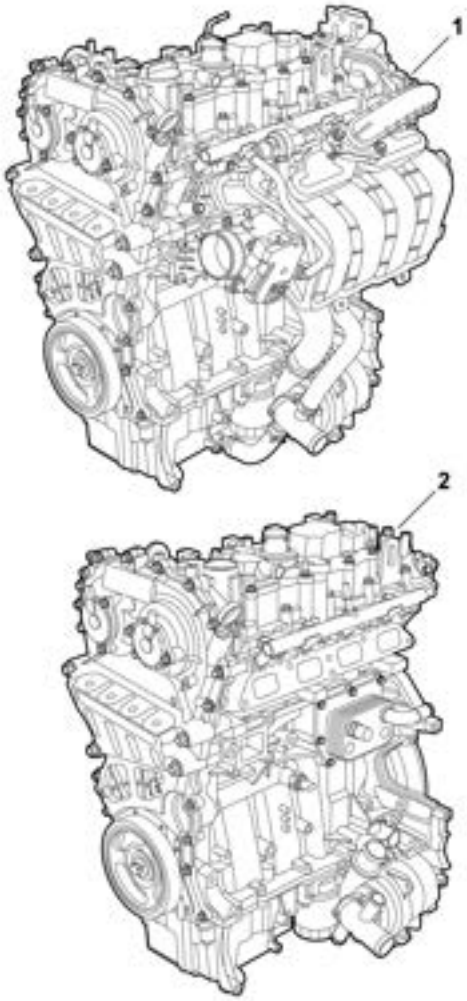

1. Engine Assembly
2. Short Engine Assembly

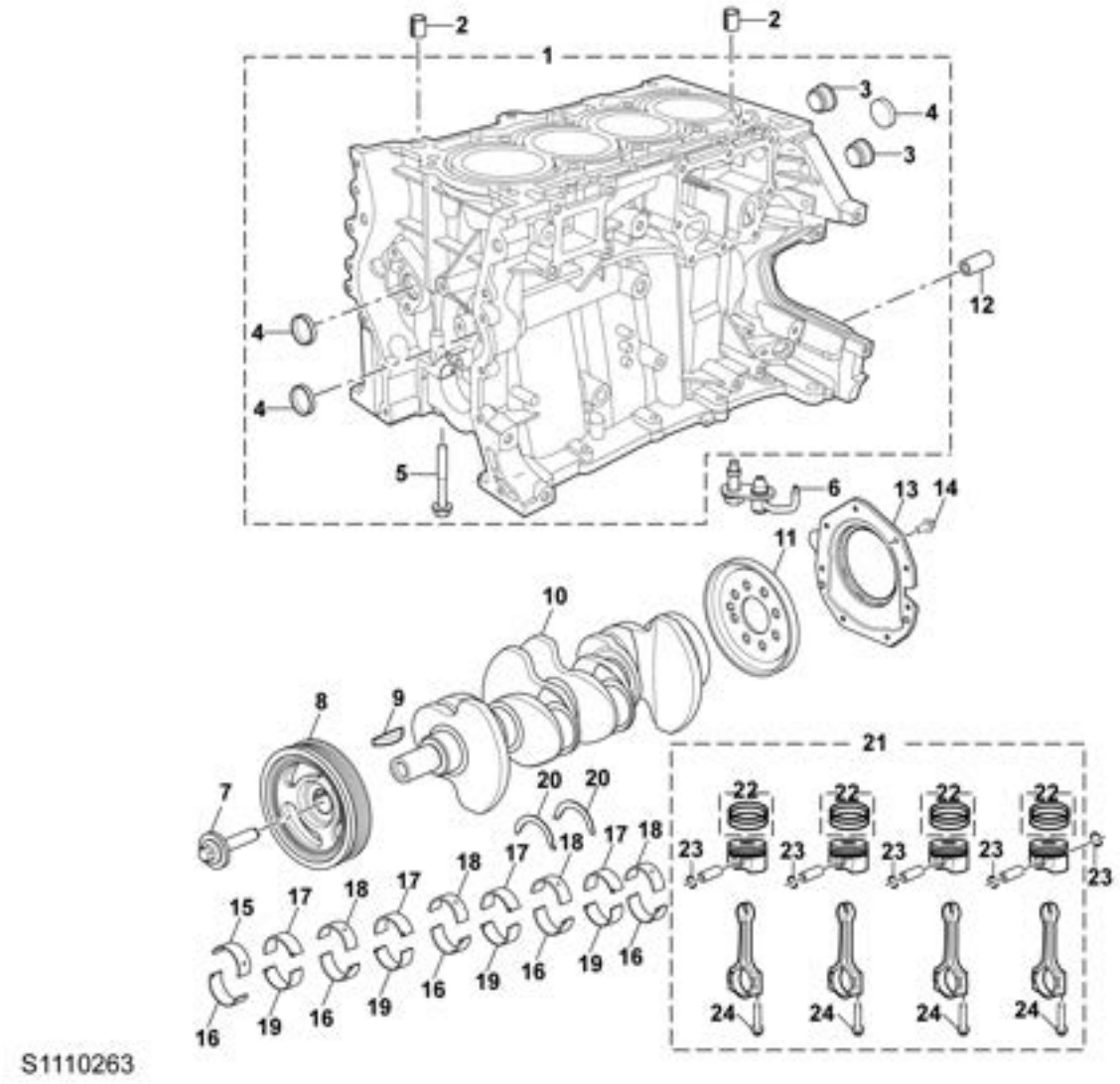

1. Cylinder Block Assembly
2. Locating Pin - Cylinder Head
3. Plug - Cylinder Block Oil Passage
4. Plug - Cylinder Block Oil Passage
5. Screw - Main Bearing Cap
6. Piston Cooling Nozzle Assembly
7. Bolt - Crankshaft Torsional Shock Absorber
8. Crankshaft Torsional Shock Absorber Assembly
9. Crankshaft Key
10. Crankshaft Machining
11. Crankshaft Signal Wheel
12. Locating Pin - Transaxle
13. Rear Crankshaft Oil Seal Assembly
14. Screw - Rear Crankshaft Oil Seal
15. 1st Crankshaft Main Bearing Upper Shell
16. 1st Crankshaft Main Bearing Lower Shell
17. Engine Connecting Rod Upper Bearing Shell
18. Crankshaft Main Bearing Upper Shell
19. Engine Connecting Rod Lower Bearing Shell
20. Crankshaft Thrust washer
21. Piston Connecting Rod Assembly
22. Piston Ring After-sales Package
23. Circlip - Piston Pin
24. Bolt - Engine Connecting Rod

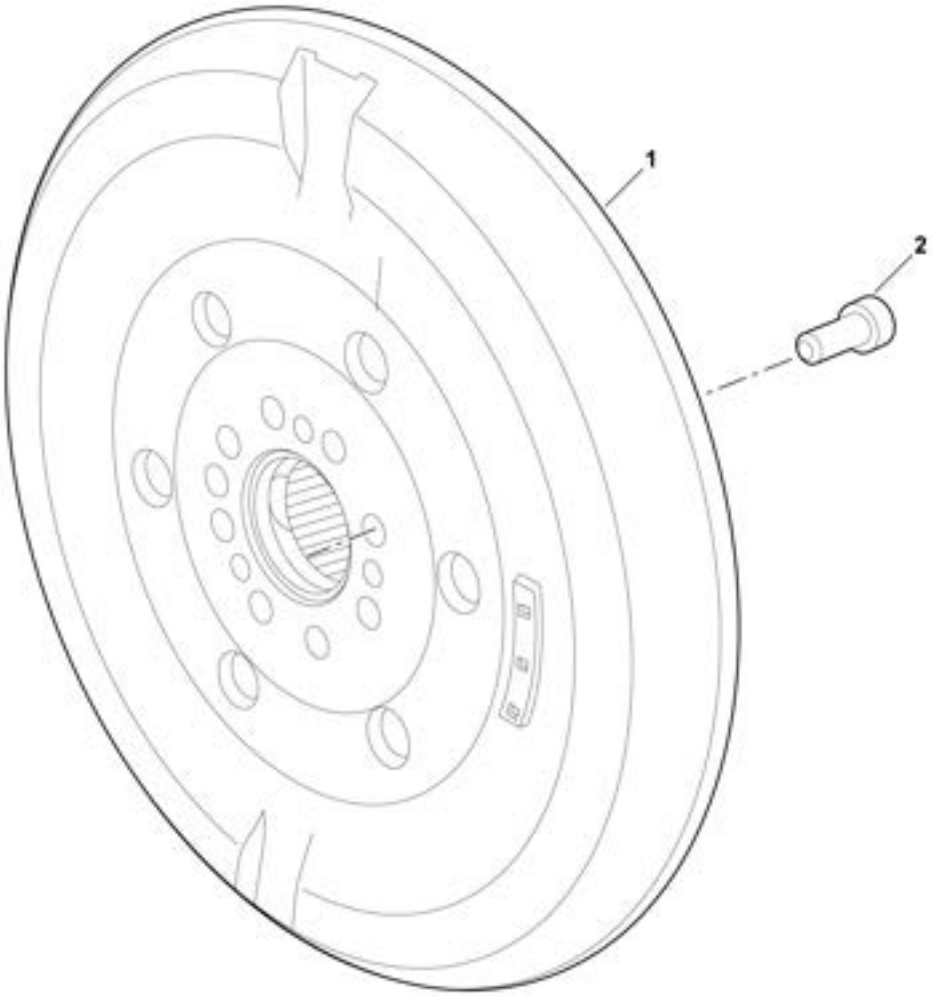

1. Dual Mass Flywheel Assembly
2. Bolt - Dual Mass Flywheel

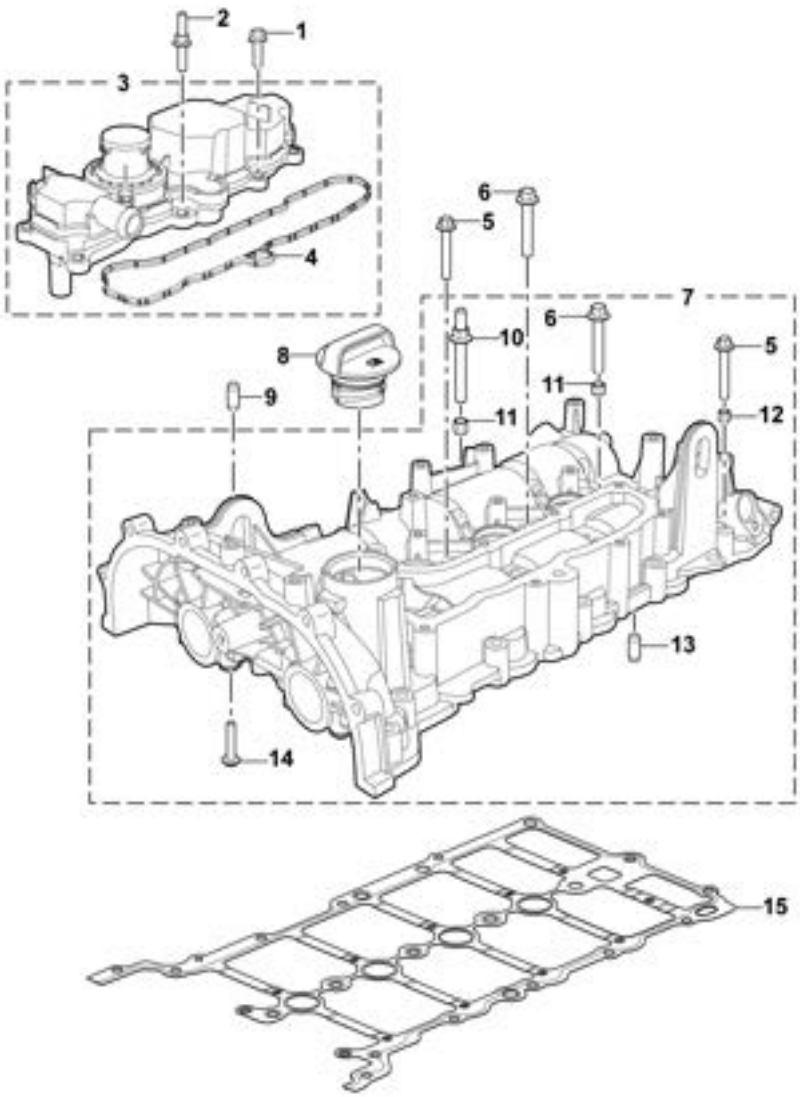

1. Bolt - Oil Separator Cover
2. Bolt - Oil Separator Cover
3. Oil Separator Assembly
4. Seal Ring - Crankcase Ventilation Assembly
5. Bolt - Camshaft Cover
6. Bolt - Camshaft Cover
7. Camshaft Cover Assembly
8. Oil Filler Cap Assembly
9. Locating Pin - Camshaft Cover
10. Bolt - Camshaft Cover
11. Camshaft Cover Bolt Fixing Sleeve
12. Camshaft Cover Bolt Fixing Sleeve
13. Locating Pin - Camshaft Bracket
14. Bolt - Camshaft Bracket
15. Camshaft Cover Gasket

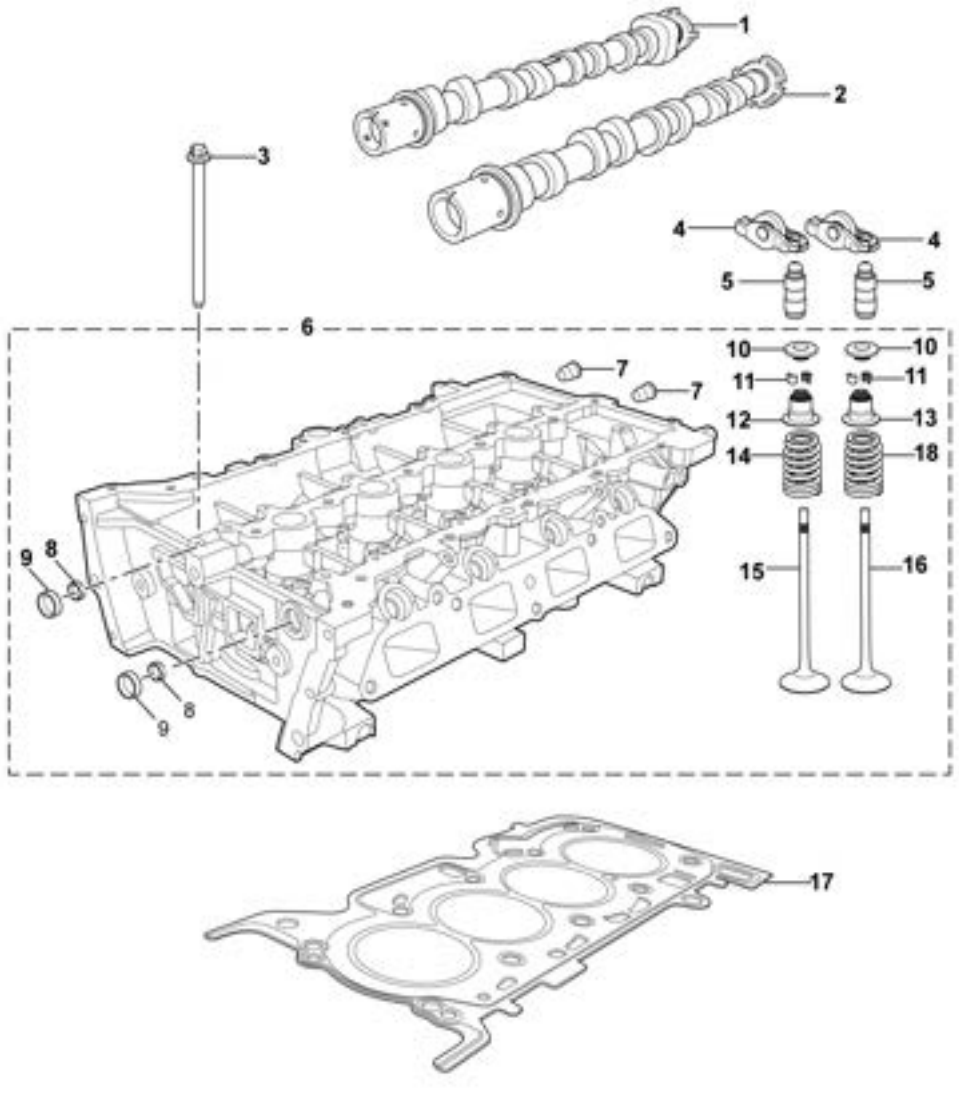

1. Exhaust Camshaft Assembly
2. Intake Camshaft Assembly
3. Bolt - Cylinder Head
4. Engine Rocker Arm Assembly
5. Valve Tappet Assembly
6. Cylinder Head Valve Fitting Assembly
7. Plug - Cylinder Head Oil Channel
8. Plug - Cylinder Head
9. Plug - Cylinder Head Oil Channel
10. Valve Spring Cap
11. Valve locking clip
12. Valve Stem Oil Seal
13. Valve Stem Oil Seal
14. Exhaust Valve Spring
15. Exhaust Valve
16. Intake Valve
17. Gasket - Cylinder Head

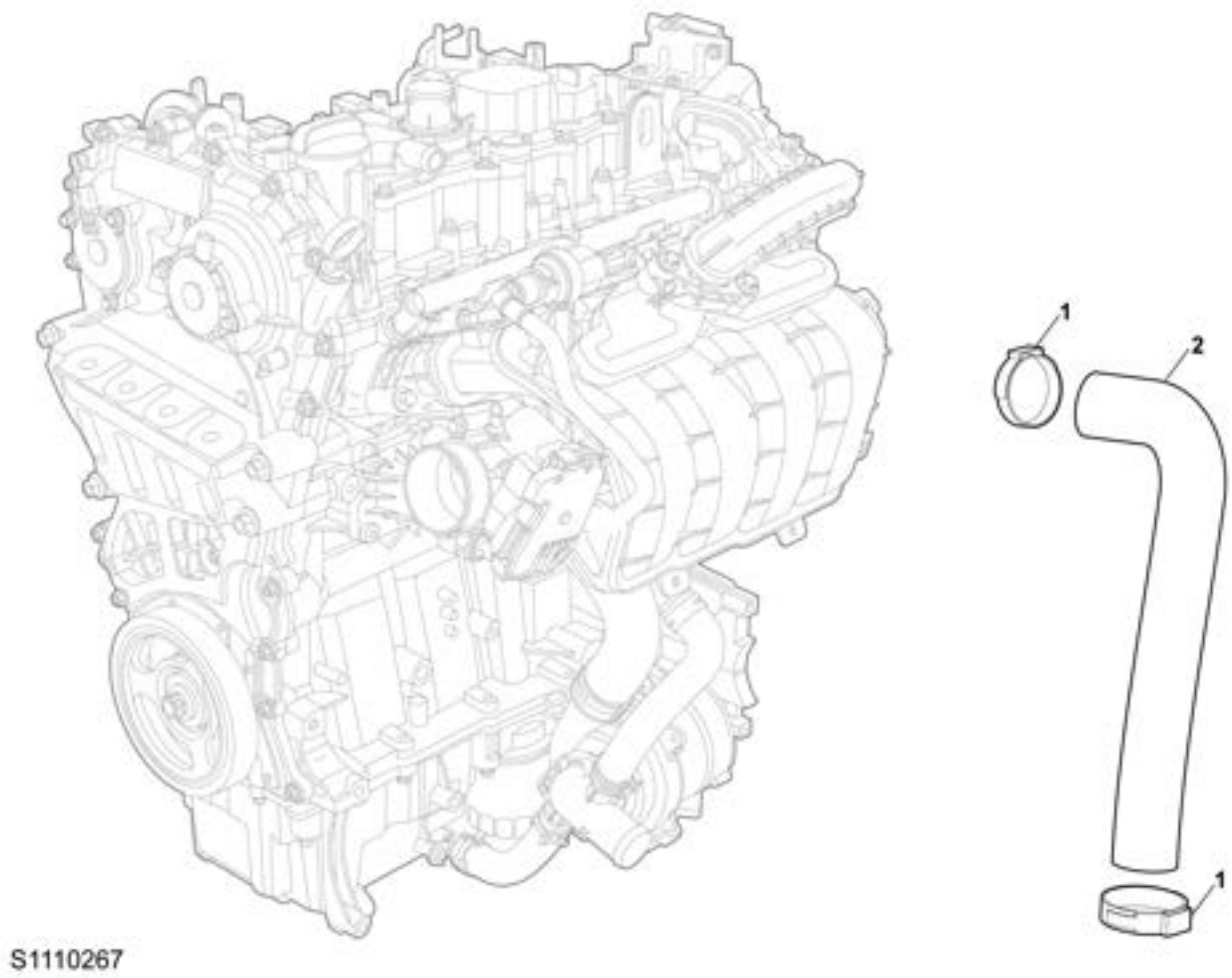

1. Pipe Clamp - Crankcase Full Load Breather Pipe
2. Crankcase Full Load Breather Hose Assembly

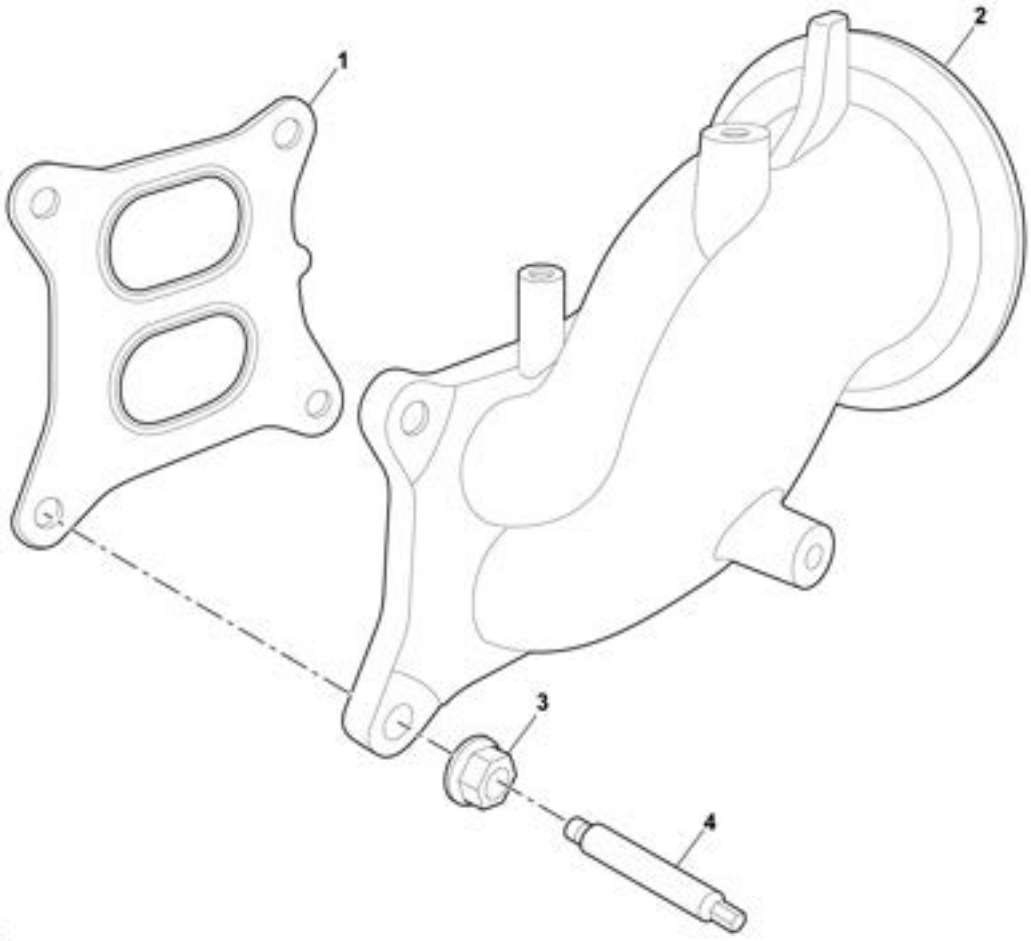

S1110268

1. Exhaust Manifold Gasket
2. Exhaust Manifold
3. Nut - Exhaust Manifold
4. Stud - Exhaust Manifold

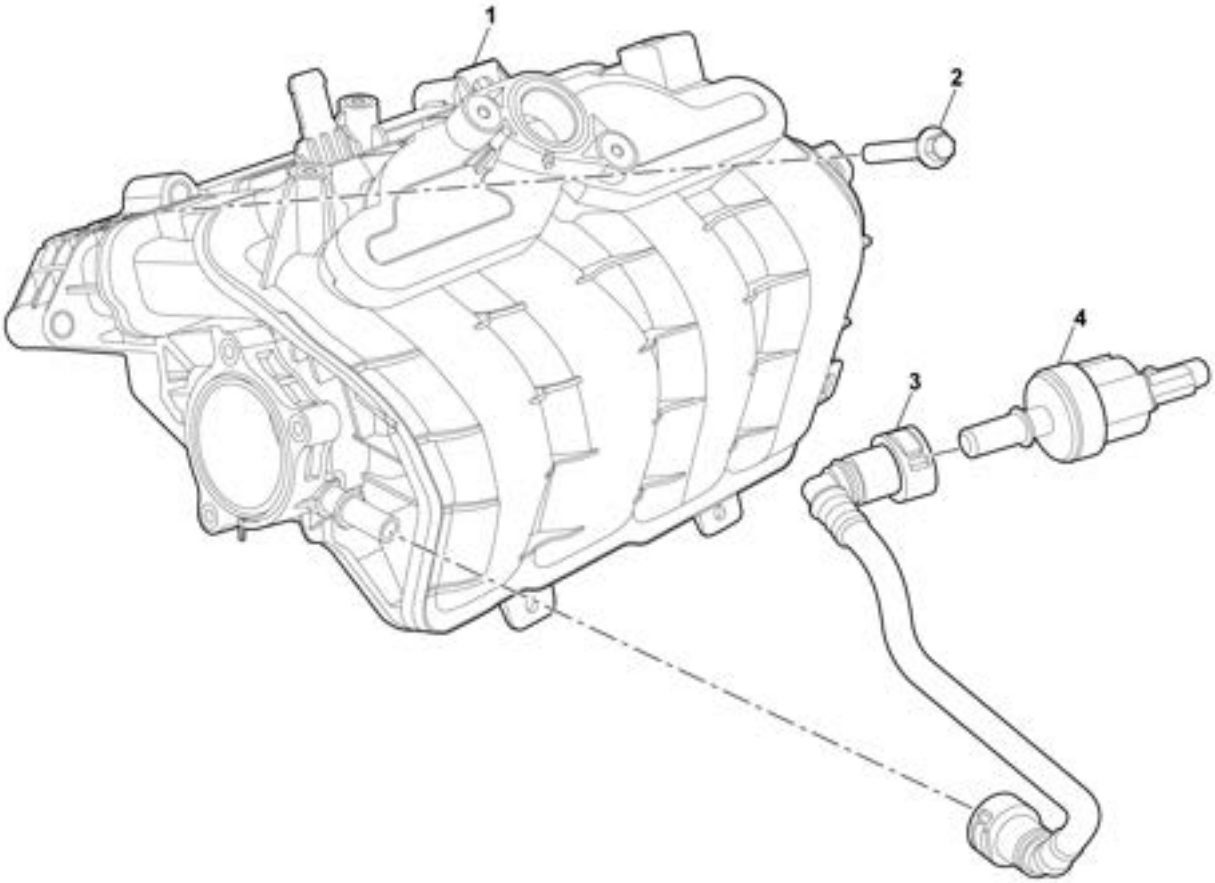

S1110269

1. Intake Manifold Assembly
2. Stud - Exhaust Manifold
3. Pipeline Assembly - Canister Control Valve to Manifold
4. Canister Desorption Control Valve Assembly

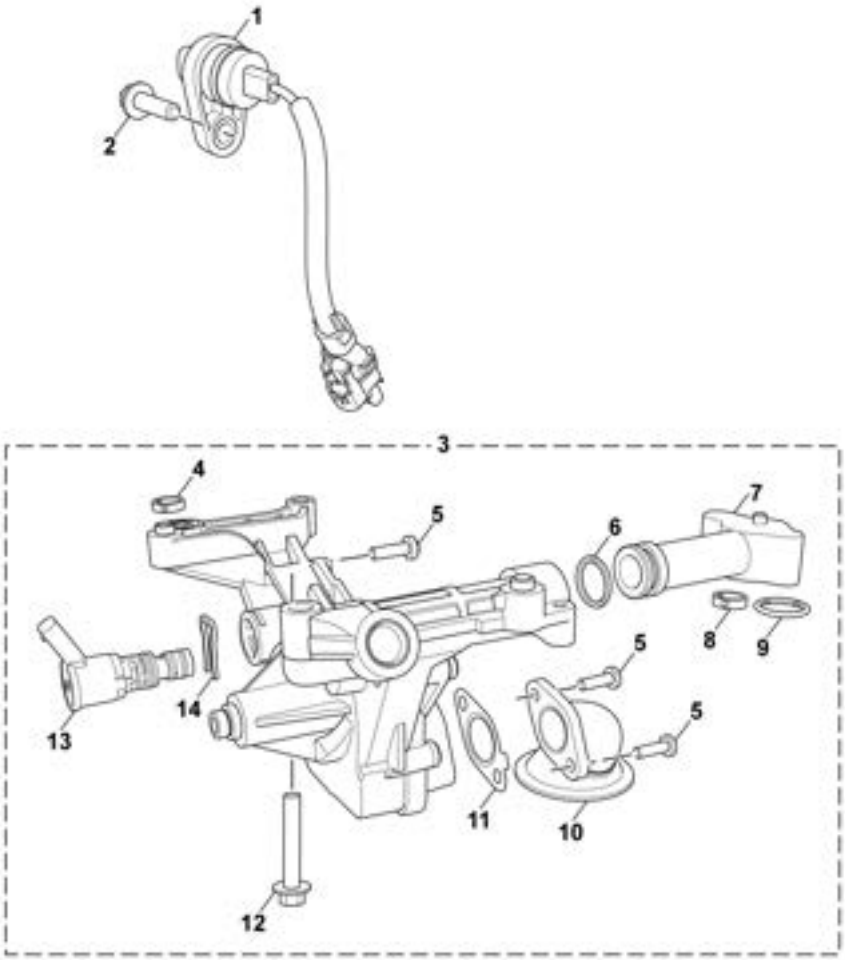

1. Oil Control Valve Harness Assembly
2. Bolt - Oil Control Valve Harness
3. Oil Pump Assembly (with strainer)
4. O-ring - Engine Oil Pump
5. Screw - Oil Pump Suction Pipe
6. O-ring - Engine Oil Pump
7. Oil Pump Connecting Pipe
8. O-ring - Engine Oil Pump
9. O-ring - Engine Oil Pump
10. Oil Pump Suction Pipe Assembly
11. Gasket - Oil Pump Suction Pipe
12. Bolt - Oil Pump
13. Oil Pump Flow Control Valve
14. Fastener - Oil Pump Flow Control Valve

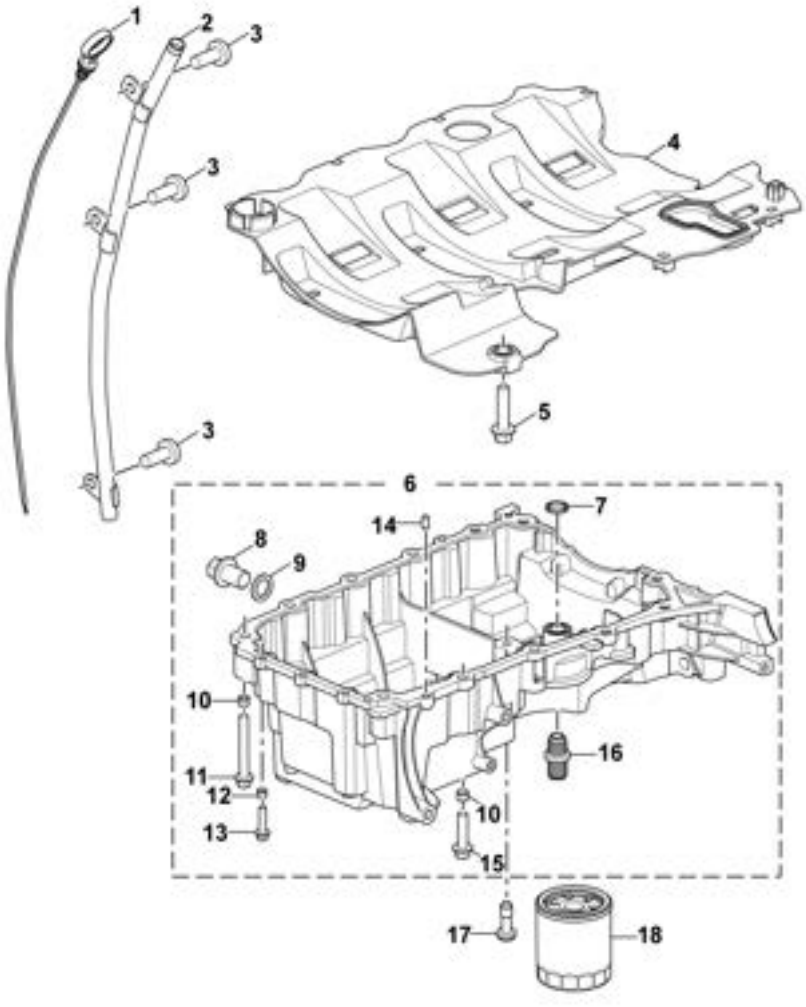

1. Oil Level Indicator Assembly
2. Engine Oil Scale Pipe Assembly
3. Bolt - Engine Oil Scale Pipe
4. Lower Crankcase Oil Baffle Assembly
5. Bolt - Lower Crankcase Oil Baffle
6. Oil Pan Assembly
7. O-ring - Oil Pan
8. Oil Pan Drain Plug Assembly
9. Washer - Oil Drain Plug
10. Oil Pan Bolt Fixing Sleeve
11. Bolt - Oil Pan
12. Oil Pan Bolt Fixing Sleeve
13. Bolt - Oil Pan
14. Locating Pin - Oil Pan
15. Bolt - Oil Pan
16. Stud - Oil Filter
17. Bolt - Oil Pan
18. Oil Filter Assembly

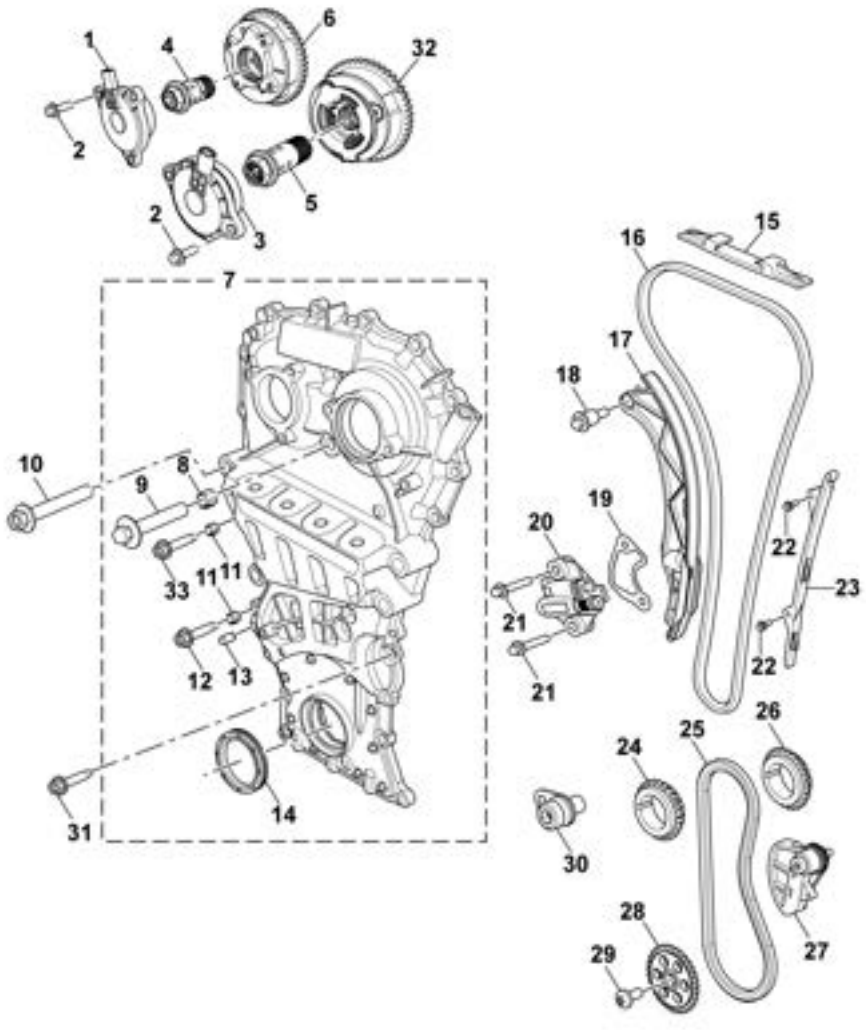

1. Exhaust Camshaft Phase Modulator Solenoid Valve Magnet
2. Bolt - Camshaft Phase Modulator Solenoid Valve Magnet
3. Intake Camshaft Phase Modulator Solenoid Valve Magnet
4. Exhaust Camshaft Phase Modulator Solenoid Valve Body
5. Intake Camshaft Phase Modulator Solenoid Valve Body
6. Exhaust Phase Modulator
7. Timing Chain Cover (With Front Crankshaft Oil Seal)
8. Timing Chain Cover Bolt Fixing Sleeve
9. Bolt - Timing Chain Cover
10. Bolt - Timing Chain Cover
11. Timing Chain Cover Bolt Fixing Sleeve
12. Bolt - Timing Chain Cover
13. Locating Pin - Timing Chain Cover
14. Front Crankshaft Oil Seal
15. Timing Chain Upper Guide Rail
16. Timing Drive Chain Assembly
17. Timing Chain Tensioner Rail
18. Bolt - Timing Chain Tensioner Rail
19. Gasket - Timing Chain Tensioner
20. Timing Chain Hydraulic Tensioner Assembly
21. Bolt - Timing Chain Tensioner
22. Bolt - Timing Chain Side Guide Rail
23. Timing Chain Side Guide Rail
24. Timing Chain Crankshaft Sprocket
25. Oil Pump Drive Chain Assembly
26. Oil Pump Chain Crankshaft Sprocket
27. Oil Pump Chain Mechanical Tensioner Assembly
28. Oil Pump Sprocket
29. Bolt - Oil Pump Sprocket
30. Timing Chain Fuel Injector Assembly
31. Bolt - Timing Chain Cover
32. Intake Phase Modulator
33. Bolt - Timing Chain Cover

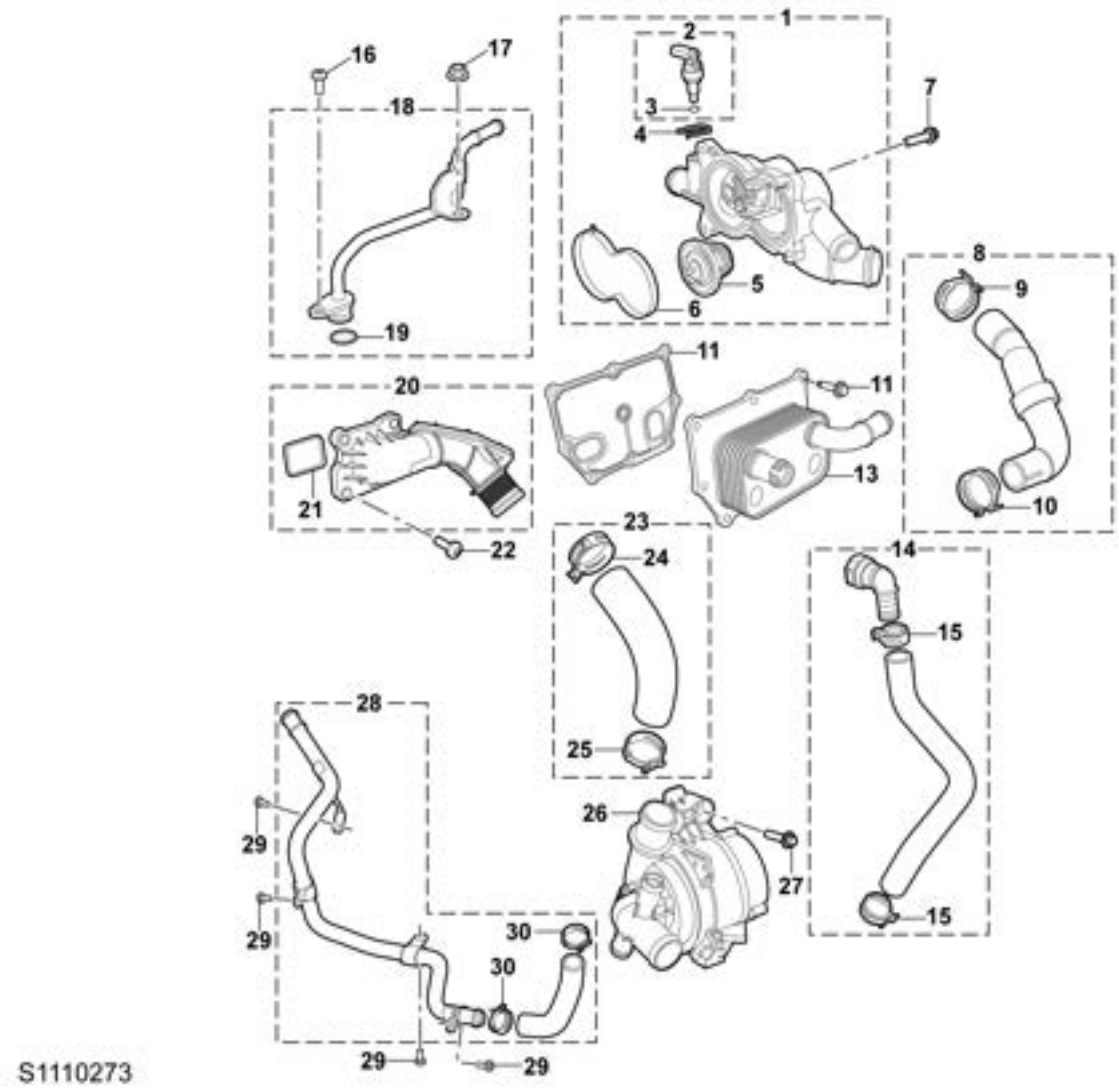

1. Thermostat and Housing Assembly
2. Water Temperature Sensor Assembly
3. Seal Ring - Water Temperature Sensor
4. Clamp - Water Temperature Sensor
5. Thermostat Assembly
6. Seal Ring - Thermostat Housing
7. Bolt - Thermostat Housing
8. Oil Cooler Water Inlet Pipe Assembly
9. Clamp - Oil Cooler Water Inlet Pipe
10. Clamp - Oil Cooler Water Inlet Pipe
11. Gasket - Oil Cooler
12. Screw - Oil Cooler
13. Oil Cooler Assembly
14. Oil Cooler Water Outlet Pipe Assembly
15. Clamp - Oil Cooler Water Outlet Pipe
16. Bolt - Engine Cooling Overflow Pipe
17. Nut - Engine Cooling Overflow Pipe
18. Engine Cooling Overflow Pipe Assembly
19. Seal - Engine Cooling Overflow Pipe
20. Engine Water Inlet Assembly
21. Seal Ring - Engine Water Inlet
22. Bolt - Engine Water Inlet
23. Water Pump Inlet Pipe Assembly
24. Pipe Clamp - Engine Water Outlet Pipeline
25. Pipe Clamp - Engine Water Outlet Pipeline
26. Engine Electronic Main Water Pump
27. Bolt - Water Pump Housing
28. Pipeline Assembly - Heater Water Outlet Pipe to Water Pump
29. Bolt - Heater Water Outlet Pipe to Water Pump Pipeline
30. Clamp - Heater Water Outlet Pipe

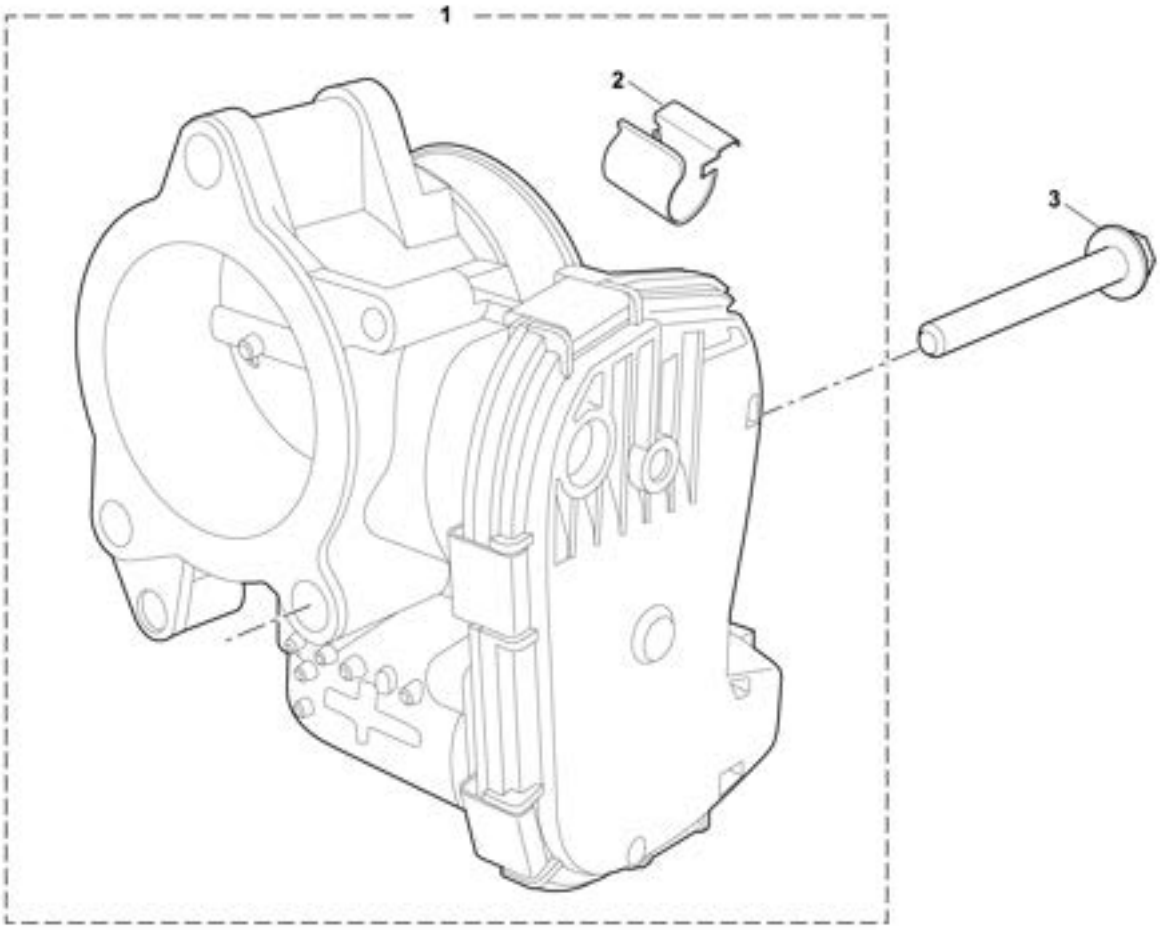

S1110274

1. Throttle Body Assembly
2. Screw - Throttle Body
3. Throttle Body Bracket

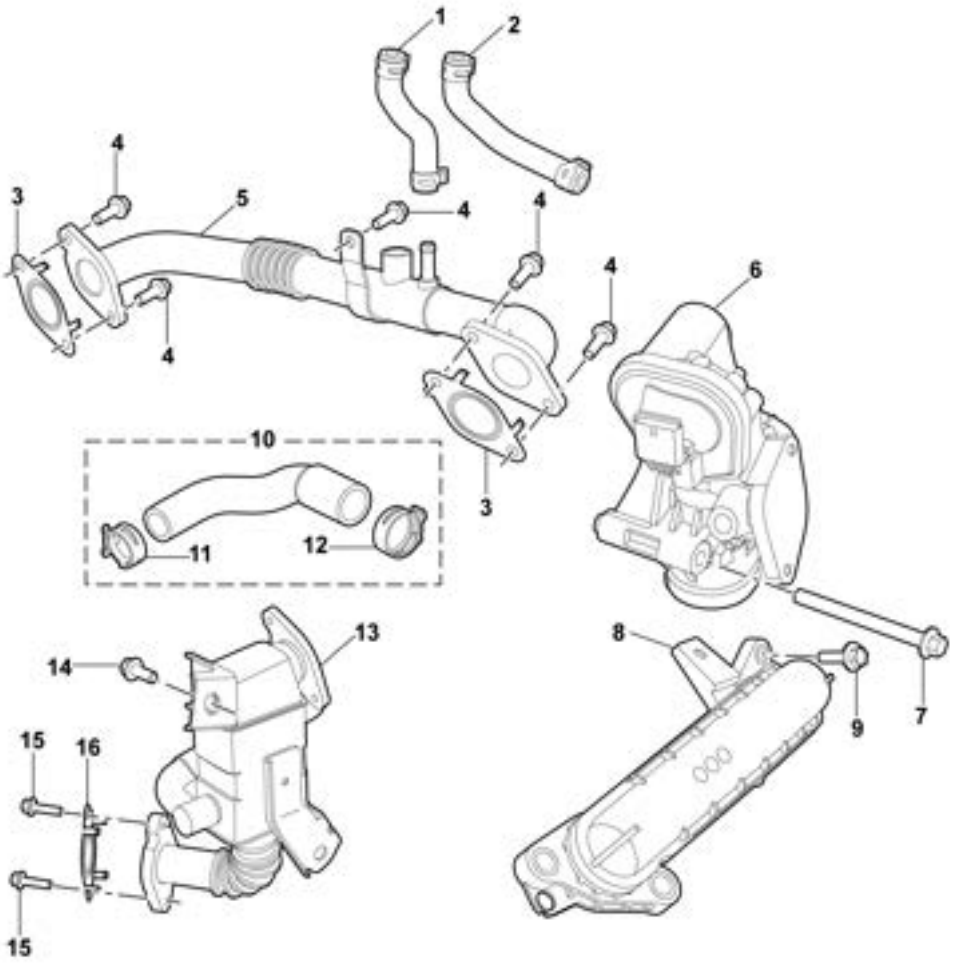

1. Differential Pressure Sensor Air Inlet Hose
2. Differential Pressure Sensor Air Outlet Hose
3. Gasket - EGR Cooler Outlet Pipe
4. Bolt - EGR Cooler Outlet Pipe
5. EGR Cooler Outlet Pipe
6. EGR Valve
7. Bolt - EGR Valve
8. EGR Valve Outlet Pipe
9. Bolt - EGR Valve Outlet Pipe
10. EGR Cooler Water Inlet Pipe Assembly
11. Clamp - EGR Cooler Water Inlet Pipe
12. Clamp - EGR Cooler Water Inlet Pipe
13. EGR Cooler
14. Bolt - EGR Module
15. Bolt - EGR Module Inlet Pipe
16. Gasket - EGR Cooler Inlet Pipe

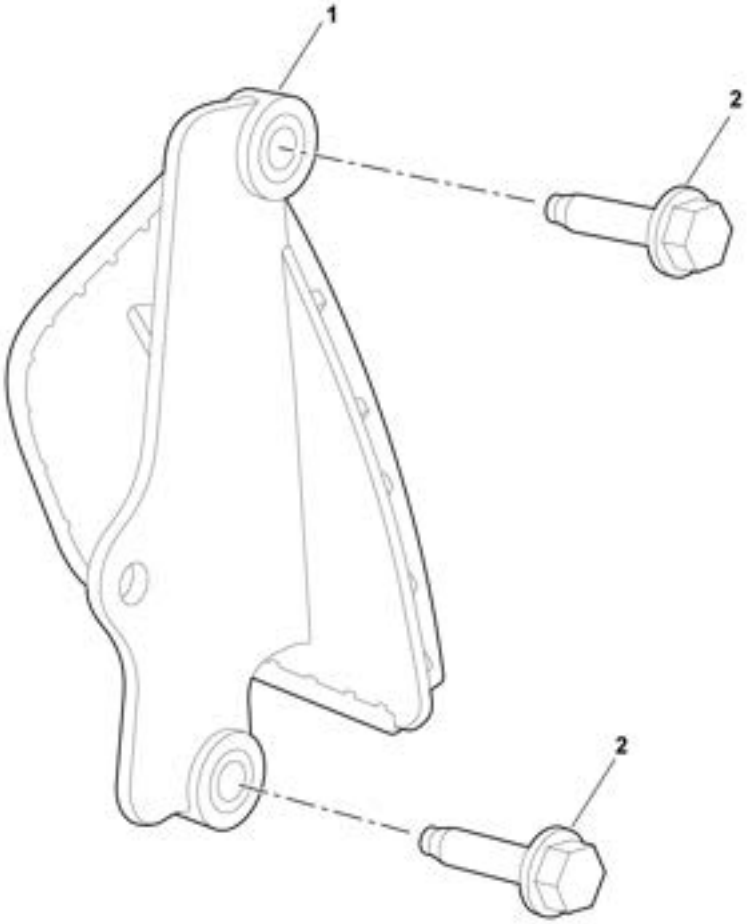

S1110276

1. Starter Motor Hole Cover Plate
2. Bolt - Starting Motor Hole Cover Plate

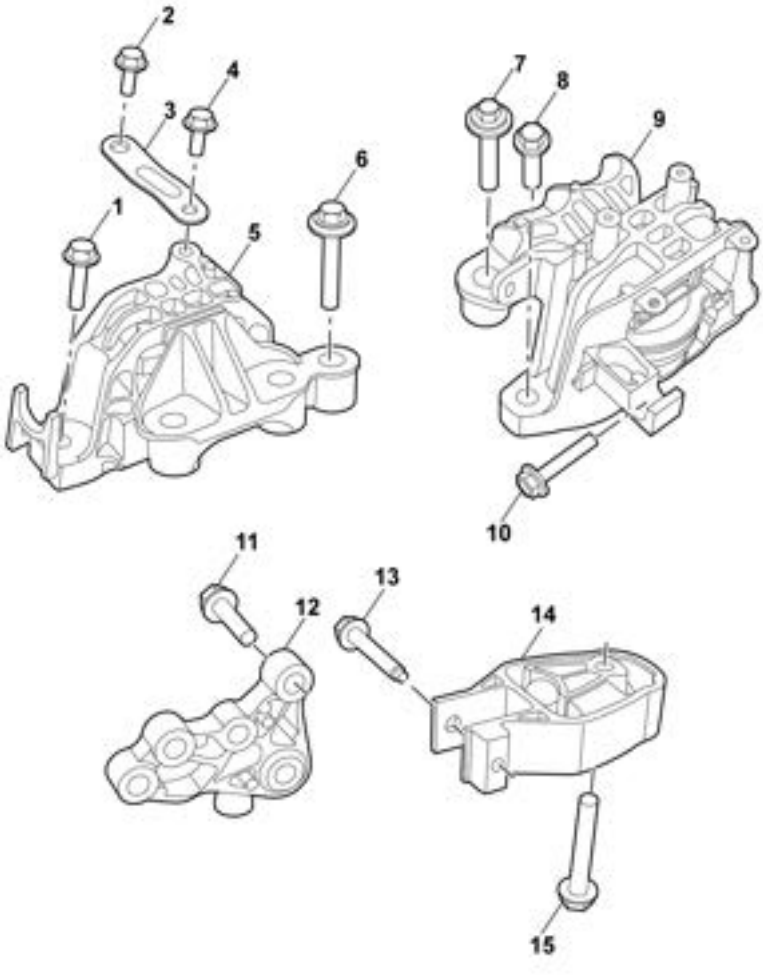

1. Bolt - Engine Mount (Body Side)
2. Bolt - Engine Mount Lateral Bracket (Body Side)
3. Engine Mount Lateral Bracket
4. Bolt - Engine Mount Lateral Bracket (Mount Side)
5. Engine Suspension
6. Bolt - Engine Mount (Engine Side)
7. Bolt - Transmission Mount Bracket (Mount Side)
8. Bolt - Transmission Mount (Body Side)
9. Transmission Mount Assembly
10. Bolt - Transmission Mount (Body Side)
11. Bolt - Rear Mount Bracket (Transmission Side)
12. Lower Tie Rod Bracket
13. Bolt - Rear Lower Tie Rod Bracket (Bracket Side)
14. Rear Lower Tie Rod
15. Bolt - Rear Lower Tie Rod (Subframe Side)

Description

Overview

GS62H engine features in-line 4-cylinder, 16-valve, DOHC and timing chain drive.

The engine is mainly composed of the camshaft, cylinder head, cylinder block, crankshaft, piston connecting rod, oil pan, etc.

Camshaft

The camshaft drives the roller rocker arm, one end of which is supported by the hydraulic tappet and the other end is supported by the valve stem. The valve is driven by the rocker arm torque. The valve clearance can be automatically compensated by the hydraulic tappet. The valve stem oil seal is press-fitted on the cylinder head oil seal seat and can be used as the lower valve spring seat to support the valve spring.

The tail end of the camshaft is equipped with a camshaft signal wheel to provide camshaft position signals for camshaft position sensor.

There are 4 oil holes in the camshaft journal, all of which are used as oil ducts. The oil enters the inner hole of camshaft journal and the OCV body through the oil hole.

Two OCV electromagnets are fitted on the front end cover, fixed by bolts and sealed by O-rings. The transmission ends of the intake and exhaust camshafts are provided with phase adjusters, which are fixed by threads contained in the OCV body. The phase modulator has two hydraulic chambers, respectively for advance and delay purposes.

The electromagnet and the valve body work together to achieve three-position four-way control function, including an oil inlet, an oil return port and two oil ducts connected with the phase modulator hydraulic chamber. According to the working condition of the engine, ECU outputs the duty ratio signal to control the OCV electromagnets, so as to control the stroke of the electromagnet push rod, which is transferred to the valve core position of the OCV body to change the oil flow direction to the phase modulator camber. Finally, the camshaft phase is adjusted to obtain the optimal gas distribution effect.

Cylinder Head

The cylinder head is made of cast aluminum material and connected with the cylinder block through multi-layer cylinder gaskets by using 10 high-strength bolts, providing high overall strength and reliable structure.

The cylinder head adopts 4 valves per cylinder structure with a spark plug mounted at the centre of the combustion chamber. Due to adoption of overhead valve structure, powerful whirlpool will be formed in the combustion chamber to make the mixed gas evenly distributed, which is good for transmission of flame to improve combustion condition, so as to enhance the fuel economy, power performance and emission performance of the engine.

For the metal cylinder gasket in a multi-layer structure, the sealing at cylinder opening is enhanced, and global coating technology is adopted to ensure the sealing performance.

Cylinder Block

The cylinder block is composed of cast aluminum material, providing high overall strength and difficult deformation.

Crankshaft

The axial movement of the crankshaft is controlled by the thrust plates on both sides of the 4th bearing of the cylinder block. The radial clearance of the main bearing shell is controlled through the selection of the main bearing shell. Reasonable radial clearance is achieved by selecting main bearing shell with three different wall thicknesses.

The oil is supplied to the bearing shell of the connecting rod big end through the oil groove of the upper main bearing shell and the oil hole on the crankshaft journal. The radial clearance of the connecting rod bearing shell is controlled through the selection of the connecting rod bearing shell. Reasonable radial clearance of the connecting rod bearing shell is achieved by selecting connecting rod bearing shell with three different wall thicknesses.

Piston Connecting Rod

The aluminum alloy thermal expansion piston is provided with a full floating piston pin fit to the clearance of the small end of connecting rod, and both ends of the piston pin are fixed by circlips. Each piston is provided with two compression rings and one oil ring.

The forging steel connecting rod has an H-section structure. The big end of the connecting rod moves on the crankshaft journal. The connecting rod adopts forging+cracking process.

Oil Pan

The aluminum oil pan is connected with the cylinder block, and the mating face between the oil pan and the block is sealed with sealant. The oil pump is assembled to the bottom of the cylinder block, and the oil passes through the oil strainer with screen and then the oil filter after pressurized through the oil pump. Clean oil free from impurities is distributed to the main bearing and cylinder head via the main oil duct of the engine block to lubricate the crankshaft, connecting rod and camshaft, etc.

Crankcase Ventilation

The ventilation system redirects the exhaust gas escaped to the crankcase back into the intake system with the help of intake system vacuum level, then sends it to the cylinder for combustion, so as to reduce the air pollution.

Blow-by of crankcase enters into the oil-gas separator in the camshaft cover via the internal channel of engine, then oil and gas in the crankcase are separated, and oil flows back to the oil pan. According to the working condition of the engine, the separated oil and gas enter into the intake manifold through the

part load passage and then into the cylinder for combustion; or enter into the intake manifold through the full load breather pipe after flowing through the pipeline passing through the air filter, then enter into the cylinder for combustion.

Operation

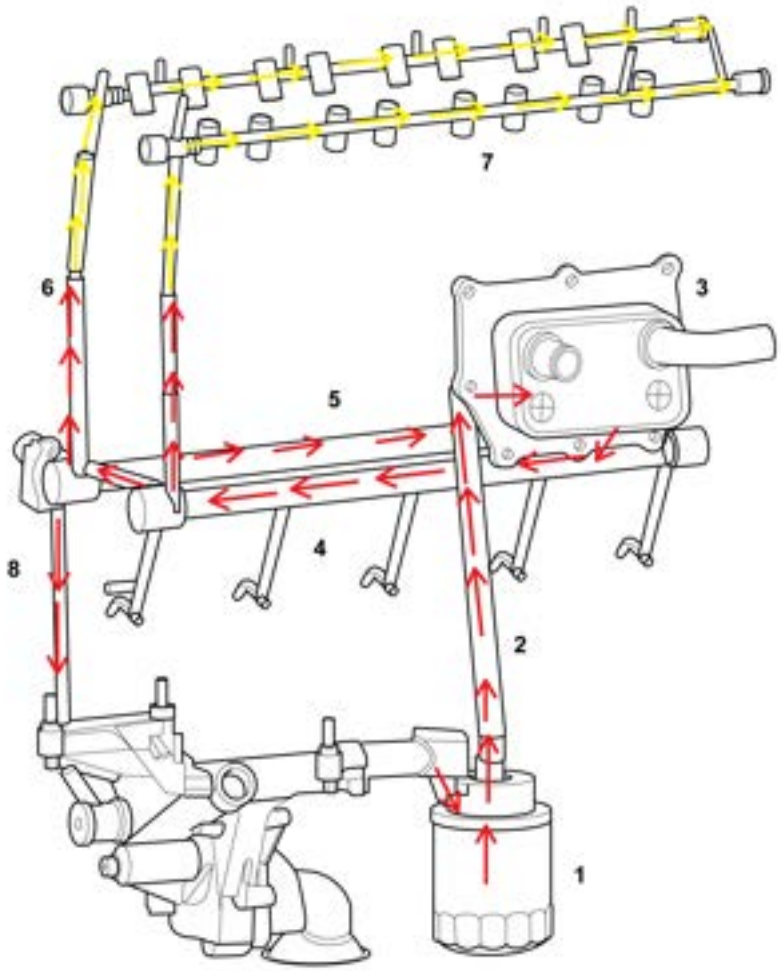

S1115268

1. Oil Filter
2. Oil Filter Oil Outlet Passage
3. Oil Cooler
4. Crankshaft (Bearing Shell)/Connecting Rod Big End (Bearing Shell)
5. Piston Cooling Nozzle
6. Timing Chain Nozzle/Timing Chain Tensioner
7. Camshaft (Bearing Shell)/Phase Modulator and Valve Body
8. Engine Oil Pressure Feedback Oil Duct

The lubrication system is a full-flow filtration, forced oil supply system. Oil is drawn from the oil pan through the oil strainer by the oil pump, and the oil strainer is equipped with a screen which can prevent impurities from entering the oil pump.

The secondary variable displacement oil pump with an On/Off solenoid valve is driven by the crankshaft by using the oil pump chain. According to the needs of different working conditions of the engine, the high and low pressure modes can be switched through the switch control of the solenoid valve, and the displacement of the oil pump can be adjusted in real time according to the actual working conditions of the engine, so that the engine can achieve the preset oil pressure under the two modes, which ensures that the engine runs under the ideal oil pressure.

The oil flows out from the oil pump outlet to the oil filter through the oil pan oil duct, then into the main oil duct of engine block, and the oil is distributed to the crankshaft, piston cooling nozzle and timing chain cooling nozzle. The grooves around each upper main bearing supplies oil to the drilled crankshaft channel, and the connecting rod bearing is supplied with oil by the channel connecting the crankshaft main journal and rod journal.

The oil enters into each oil supply hole of the camshaft through the cylinder head. The drilled channel supplies oil to the surface of each camshaft bearing. The oil flows back to the oil pan through the cast channel in the cylinder head. The timing chain lubricant is discharged into the oil pan directly.

All other moving parts can be lubricated through gravity flow or splash. The engine oil pressure sensor is fitted on the main oil duct of the cylinder block behind the oil cooler to monitor the oil pressure of the engine main oil duct.

Service Guide

Powertrain GS62H

Remove

1. Remove the manual service disconnect.

Manual Service Disconnect (MSD) Remove

2. Drain the coolant.

Coolant Drain - ENG Refill - ENG Drain Refill

3. Drain the engine oil.

Oil Filter Remove

4. Drain the electric drive unit fluid.

Electric Drive Unit Fluid Drain and Refill

5. Recover the refrigerant.

Refrigerant Refrigerant Recovery Air Conditioning System Drain A/C System Lubricating Oil Refill and Supplementation Refrigerant Refill

6. Remove the air filter assembly.

Air Filter Assembly

7. Remove the expansion tank bracket.

Expansion Tank Bracket Remove - Transmission

8. Remove the front compartment fuse box.

Front Compartment Fuse Box Remove

9. Disconnect the engine harness from the engine control module (1).
10. Disconnect the engine harness from the front compartment harness (2).

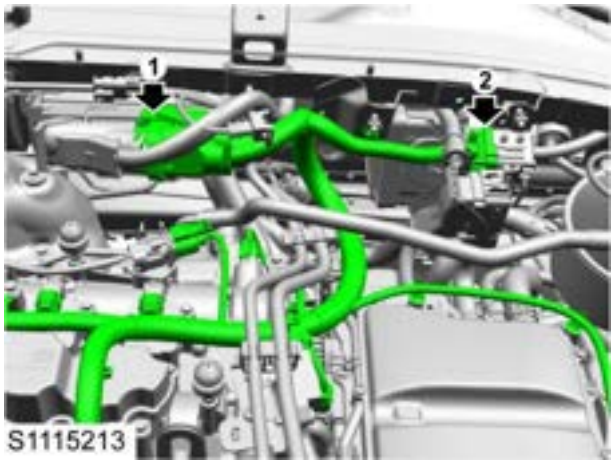

11. Disconnect the pipeline from the coolant expansion tank.

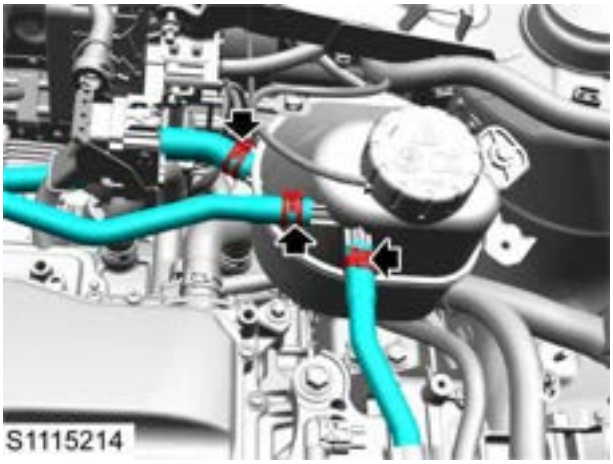

12. Disconnect the pipeline from the A/C box.

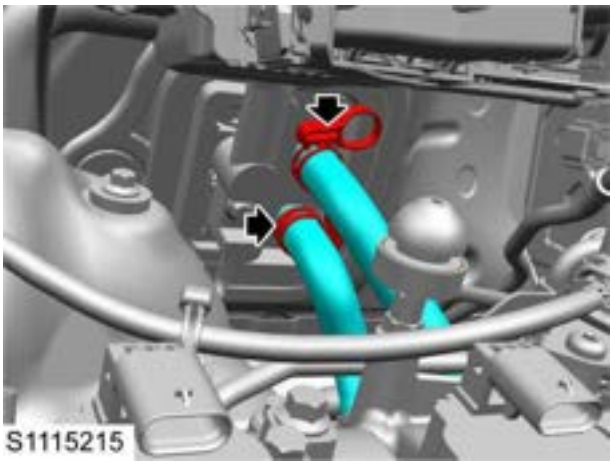

13. Disconnect the pipeline (1) from the fuel rail.
14. Disconnect the pipeline (2) from the canister solenoid valve.

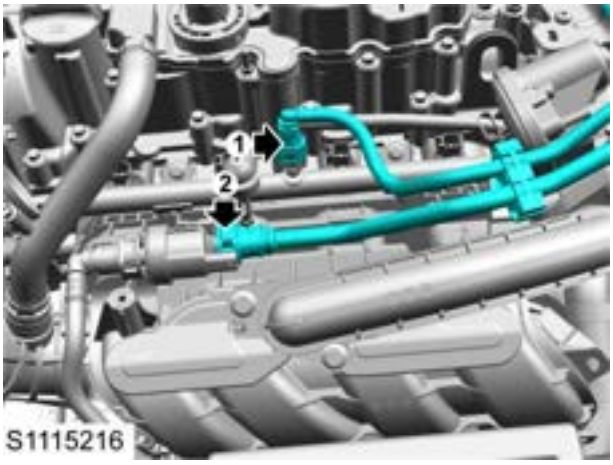

15. Disconnect all harnesses from the electric drive unit.
16. Disconnect the pipeline (1) from the electric drive unit.
17. Disconnect the pipeline (2) from the radiator.

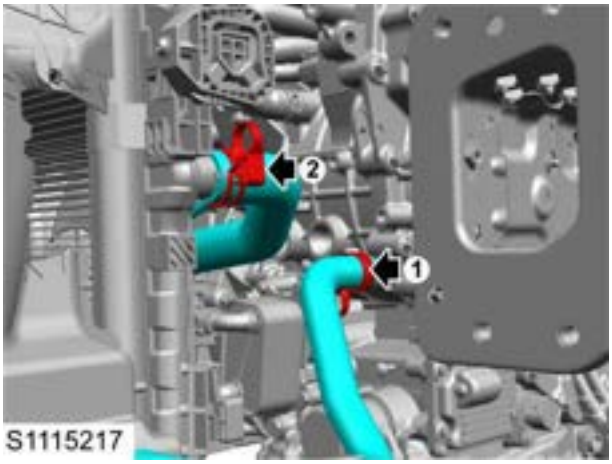

18. Disconnect the pipeline from the electric water pump.

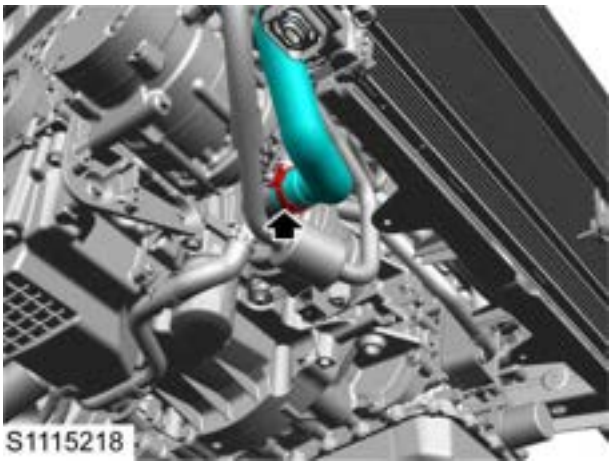

19. Remove 2 bolts fixing the A/C pipeline to the compressor.

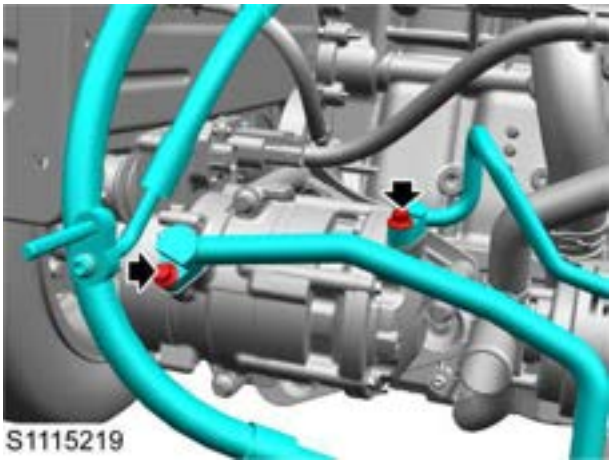

20. Remove 1 nut fixing the engine ground wire to the body.

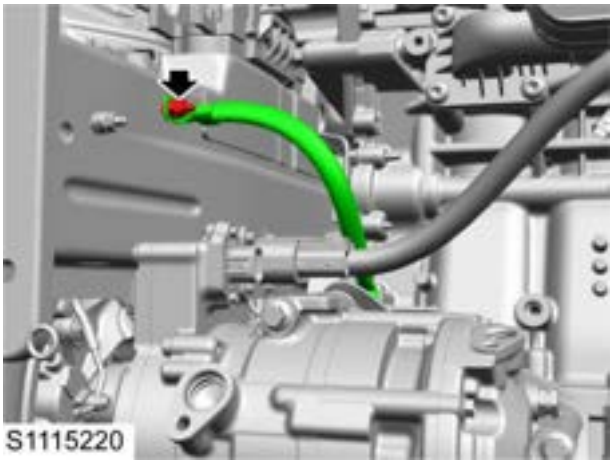

21. Disconnect the high voltage harness (1) from the PEU.
22. Remove 1 bolt (2) fixing the low voltage harness to the PEU.

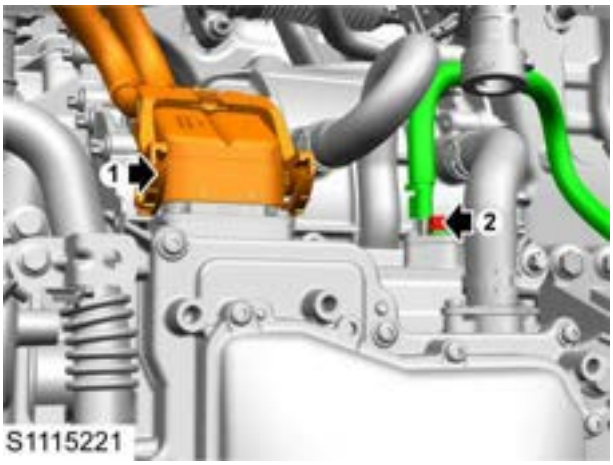

23. Disconnect the harness from the rear oxygen sensor.

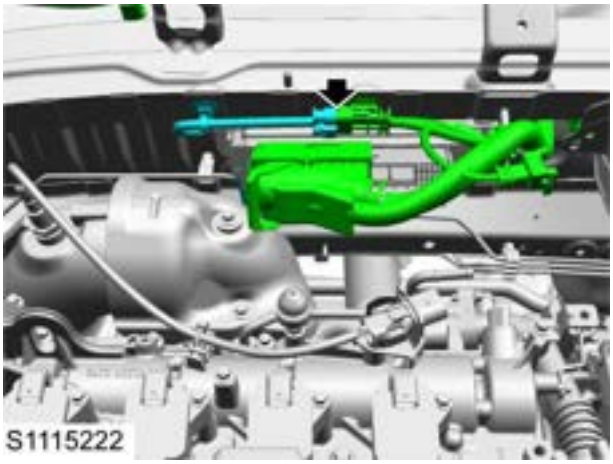

24. Remove the front left/right axle shaft assembly.

☞**Front Left Axle Shaft Assembly Remove - Front Right Remove - Front Left**

☞**Front Right Axle Shaft Assembly Remove - Front Right Remove - Front Left**

25. Remove 2 nuts fixing the three-way catalytic converter to the middle exhaust pipe and discard the gaskets.

26. Remove the powertrain mount.

Powertrain Mount Remove

27. Remove the powertrain slowly.

Refit

1. Move the powertrain slowly to the front compartment.
2. Fit the powertrain mount.

Powertrain Mount Refit

3. Fit 2 nuts and new gaskets fixing the three-way catalytic converter to the middle exhaust pipe, tighten them to **19-25Nm** and check the torque.
4. Fit the front left & right axle shaft assembly.

Front Left Axle Shaft Assembly Refit - Front Right Refit - Front Left

Front Right Axle Shaft Assembly Refit - Front Right Refit - Front Left

5. Connect the harness to the rear oxygen sensor.
6. Fit 1 bolt fixing the low voltage harness to the PEU, tighten it to **7-10Nm** , and check the torque.
7. Connect the high voltage harness to the PEU.
8. Fit 1 nut fixing the engine ground wire to the body, tighten it to **7-10Nm** , and check the torque.
9. Fit 2 bolts fixing the A/C pipeline to the compressor, tighten them to **19-25Nm** and check the torque.
10. Connect the pipeline to the electric water pump.
11. Connect the pipeline to the radiator.
12. Connect the pipeline to the electric drive unit.
13. Connect all the harnesses to the electric drive unit.
14. Connect the pipeline to the canister solenoid valve.
15. Connect the pipeline to the fuel rail.
16. Connect the pipeline to the A/C box.
17. Connect the pipeline to the coolant expansion tank.
18. Connect the engine harness to the front compartment harness.
19. Connect the engine harness to the engine control module.
20. Fit the front compartment fuse box.

Front Compartment Fuse Box Refit

21. Fit the expansion tank bracket.

Expansion Tank Bracket Refit - Transmission

22. Fit the air filter assembly.

Air Filter Assembly

23. Refill the refrigerant.

Refrigerant Refrigerant Recovery Air Conditioning System Drain A/C System Lubricating Oil Refill and Supplementation Refrigerant Refill

24. Refill the electric drive unit fluid.

Electric Drive Unit Fluid Drain and Refill

25. Refill the engine oil.

Oil Filter Refit

26. Refill the coolant.

Coolant Drain - ENG Refill - ENG Drain Refill

27. Fit the manual service disconnect.

Manual Service Disconnect (MSD) Refit

Powertrain Mount
Remove

1. Remove the air filter assembly.

☞Air Filter Assembly

2. Remove the coolant expansion tank bracket.

☞Coolant Expansion Tank Bracket Remove - ENG Remove - Transmission

3. Lift the powertrain with the special tools TEN00070 and T10007 .

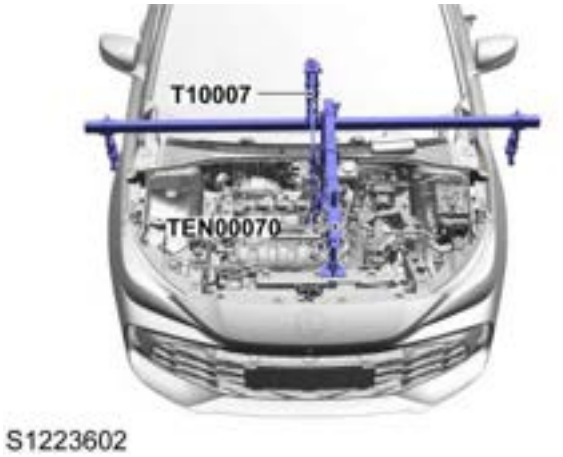

4. Remove and discard 1 nut (1) fixing the engine mount to the body.
5. Remove and discard 2 bolts (2) fixing the engine mount to the body.
6. Remove and discard 3 bolts (3) fixing the engine mount to the engine.

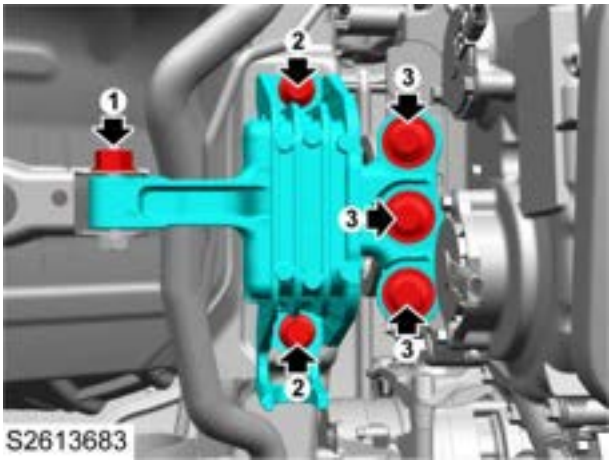

7. Remove and discard 1 nut (1) fixing the transmission mount to the body.
8. Remove and discard 3 bolts (2) fixing the transmission mount to the body.
9. Remove and discard 3 bolts (3) fixing the transmission mount to the transmission.

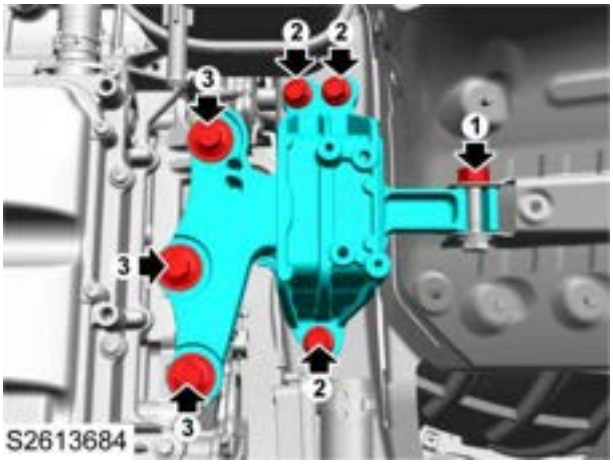

10. Remove and discard 1 bolt (1) fixing the lower tie rod to the lower tie rod bracket.
11. Remove and discard 3 bolts (2) fixing the lower tie rod bracket to the transmission.

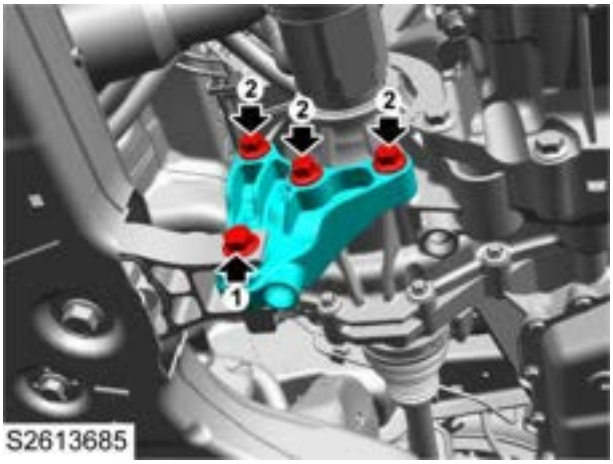

Refit

1. Fit 3 new bolts fixing the lower tie rod bracket to the transmission, tighten them to **(63-77) Nm+ (85-95) °** , and check the torque.
2. Fit 1 new bolt fixing the lower tie rod bracket to the lower tie rod bracket, tighten it to **(81-99) Nm+ (85-95) °** , and check the torque.
3. Fit 3 new bolts fixing the transmission mount to the transmission, tighten them to **(63-77) Nm+ (85-95) °** , and check the torque.
4. Fit 3 new bolts fixing the transmission mount to the body, tighten them to **(63-77) Nm+ (85-95) °** , and check the torque.
5. Fit 1 new nut fixing the transmission mount to the body, tighten it to **54-66Nm** , and check the torque.
6. Fit 3 new bolts fixing the engine mount to the engine, tighten them to **(63-77) Nm+ (85-95) °** , and check the torque.
7. Fit 2 new bolts fixing the engine mount to the body, tighten it to **90-110Nm** , and check the torque.
8. Fit 1 new nut fixing the engine mount to the body,

tighten it to **55-65Nm** , and check the torque.

9. Remove the special tools TEN00070 and T10007 .
10. Fit the coolant expansion tank bracket.

☞**Coolant Expansion Tank Bracket Refit - ENG Refit - Transmission**

11. Fit the air filter assembly.

☞**Air Filter Assembly**

Flywheel-HT11

Remove

1. Remove the electric drive unit assembly.

☞Electric Drive Unit Assembly Remove

2. Remove the plug from the timing hole of engine block.
3. Rotate the drive plate; when the flywheel mounting pin hole of the crankshaft is horizontally aligned with the air intake side, the flywheel timing pin hole is aligned with the pin hole of the engine block.
4. Insert the flywheel timing pin special tool TEN00002 into the drive plate pin hole through the engine block timing hole to lock the flywheel.

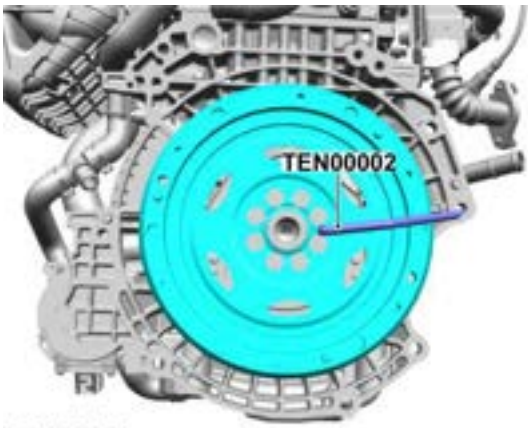

S1115223

5. Remove and discard 8 bolts fixing the flywheel to the engine.

S1115224

6. Remove the flywheel from the crankshaft.
7. Remove the flywheel timing pin special tool TEN00002 .

Refit

1. Use a saw to make two saw cuts on the bolt removed from the flywheel at an angle of 45° to the bolt shank, and clean the bolt hole on the crankshaft with the sawed bolt.
2. Clean the junction surface of the flywheel and the crankshaft.
3. Fit the flywheel to the crankshaft.
4. Fit the new glue bolts, but do not tighten them.
5. Fit 8 new bolts fixing the flywheel to the engine in the sequence shown, tighten them to **(23-77) Nm+ (66-74) °** , and check the torque.

S1115338

6. Fit the electric drive unit assembly.

☞Electric Drive Unit Assembly Refit

Cylinder Head

Remove

1. Drain the engine oil.

Engine Oil Filter Remove

2. Drain the coolant.

Coolant

3. Remove the hydraulic tappet.

Hydraulic Tappet Remove

4. Remove the fuel rail.

Fuel Rail

5. Remove the intake manifold.

Intake Manifold Remove

6. Remove the exhaust manifold.

Exhaust Manifold

7. Remove the EGR module.

EGR Module

8. Remove the thermostat housing.

Thermostat Housing Remove

9. Remove the timing chain.

Timing Chain Remove

10. Remove and discard 10 bolts fixing the cylinder head to the cylinder block.

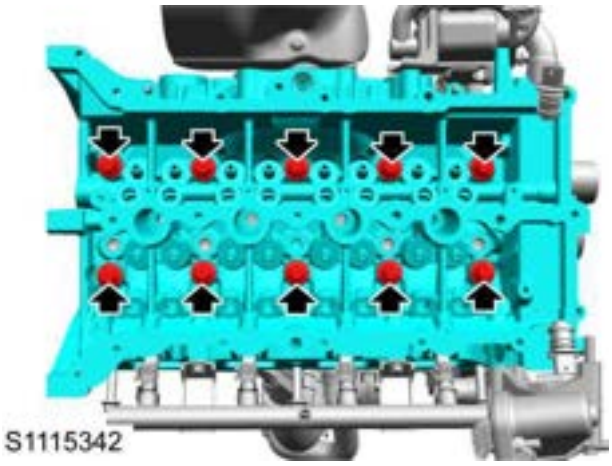

S1115342

11. Remove and discard the cylinder head gasket.

S1115343

12. Remove 4 studs from the cylinder head.

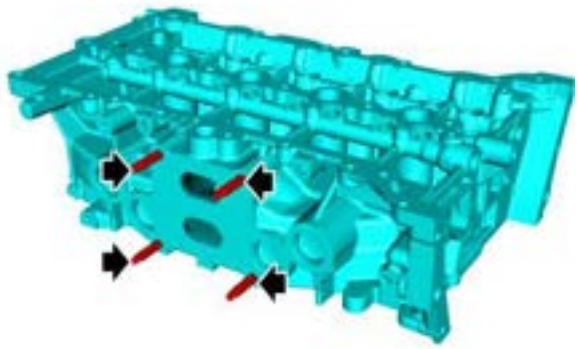

S1115097

Refit

1. Check and clear the cylinder head.

Cylinder Head Valve Spring Cleaning and Check

2. Fit the stud to the cylinder head, tighten it to **8-12Nm** , and check the torque.
3. Check the locating pins between the cylinder head and the cylinder block, the protruding height of which is (5.8-7.8)mm. If any of them is missing, refit it.
4. Clean the surface of the cylinder block to ensure that there are no foreign matters.
5. Apply sealant at the front end on the intake and exhaust sides of the cylinder block. The diameter of the sealant beads is not less than 6mm, the centre of the sealant beads is about 5mm away from the inner edge of the cylinder block, and the sealant beads are tangent to the front end of the cylinder block.

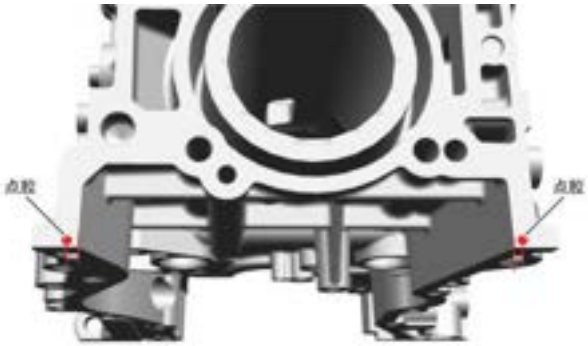

S1115366

6. Fit a new cylinder head gasket.
7. Apply sealant at the front end on the intake and exhaust sides of the cylinder gasket according to Step 5. The size and position of the sealant beads are the same as those in Step 5.

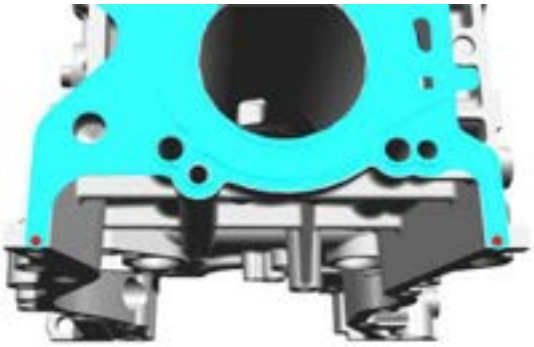

S1115367

8. Fit 10 bolts fixing the cylinder head to the cylinder block in the sequence shown, tighten them to **(37-43) Nm+ (236-244) °** , and check the torque.

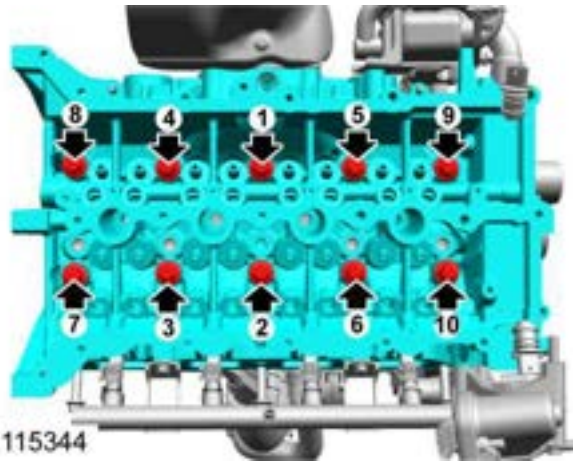

S1115344

9. Remove excessive sealant from the front end of the cylinder block/cylinder head.
10. Fit the timing chain.

☞**Timing Chain Refit**

11. Fit the thermostat housing.

☞**Thermostat Housing Refit**

12. Fit the EGR module.

☞**EGR Module**

13. Fit the exhaust manifold.

☞**Exhaust Manifold**

14. Fit the intake manifold.

☞**Intake Manifold Refit - GS62**

15. Fit the fuel rail.

☞**Fuel Rail**

16. Fit the hydraulic tappet.

☞**Hydraulic Tappet Refit**

17. Refill the coolant.

☞**Coolant**

18. Refill the engine oil.

☞**Engine Oil Filter Refit**

Cylinder Block

Remove

1. Remove the cylinder head.

Cylinder Head Remove

2. Remove the crankshaft.

Crankshaft Remove

3. Remove the knock sensor.

Knock Sensor

4. Remove the oil pressure sensor.

Oil Pressure Sensor

5. Remove the timing chain tensioner.

Timing Chain Tensioner Remove

6. Remove the oil cooler.

Oil Cooler Remove

7. Remove 4 bolts fixing the oil nozzle to the cylinder block.

8. Check 2 locating pins of the crankcase, and replace them if damaged.

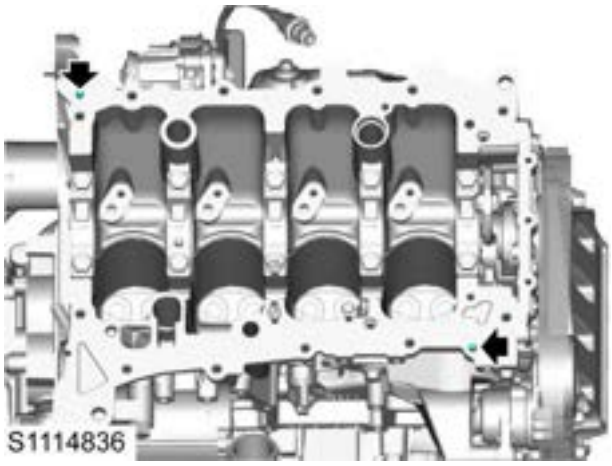

9. Check 2 locating pins of the cylinder head, and replace them if necessary.

10. Check 2 locating pins of the transmission, and replace them if necessary.

S1114838

11. Check the oil passage for blockage, and replace it if necessary.

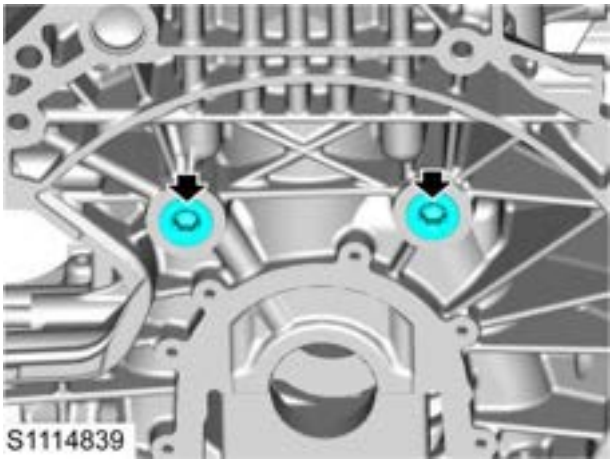

Refit

1. Clean the sealing joint surface, cooling passage, oil passage, bearing seat, threaded hole, etc. of the cylinder block to ensure that there are no foreign matters.
2. Check the cylinder block.

Cylinder Block Cylinder Block Check Cylinder Diameter Measurement Cylinder Bore Taper Measurement Cylinder Bore Out-of-Roundness Measurement Top Surface Flatness Check

3. Fit 2 locating pins of the transmission.

4. Fit 2 locating pins of the cylinder head.
5. Fit 2 locating pins of the crankcase.
6. Fit 4 bolts fixing the oil nozzle to the cylinder block, tighten them to **8-12Nm** , and check the torque.
7. Fit the oil cooler.

Oil Cooler Refit

8. Fit the timing chain tensioner.

Timing Chain Tensioner Refit

9. Fit the oil pressure sensor.

Oil Pressure Sensor

10. Fit the knock sensor.

Knock Sensor

11. Fit the crankshaft.

Crankshaft Refit

12. Fit the cylinder head.

Cylinder Head Refit

Crankshaft

Remove

1. Remove the crankshaft sprocket.

☞ Crankshaft Sprocket Remove

2. Remove the rear crankshaft oil seal.

☞ Rear Crankshaft Oil Seal Remove

3. Remove the oil pump.

☞ Oil Pump Remove

4. Remove the lower crankcase oil baffle.

☞ Lower Crankcase Oil Baffle Remove

5. Rotate the crankshaft so that the piston connecting rod assembly is at the bottom dead centre of the cylinder.
6. Remove and discard 8 bolts fixing the connecting rod big end shell covers to the connecting rod.

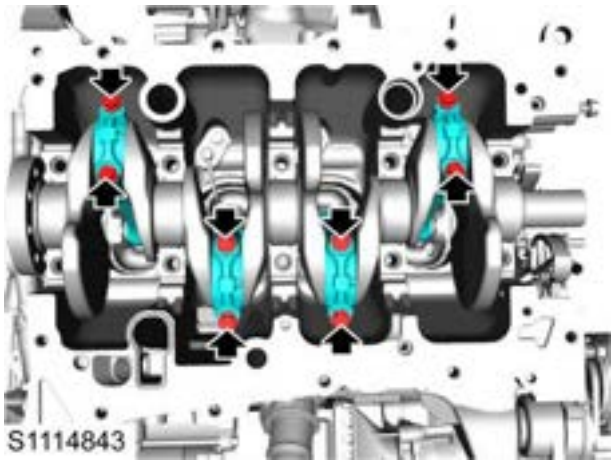
S1114843

7. Remove the connecting rod big end shell cover, and push the piston connecting rod assembly to the top edge of the cylinder.
8. Remove and discard 10 bolts fixing the main bearing shell to the engine.

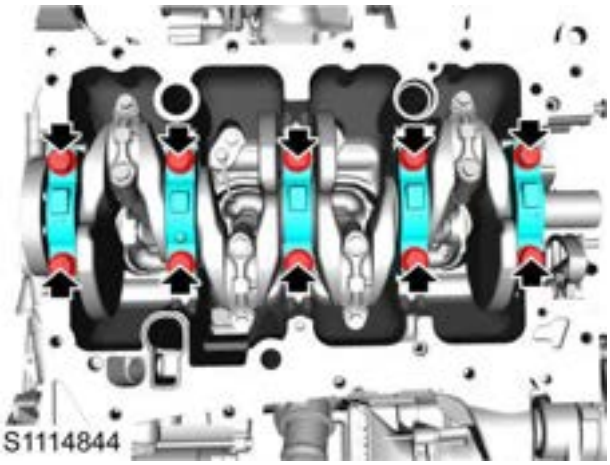
S1114844

9. Remove the crankshaft, and remove the other half piece of the main bearing shell from the cylinder block.

S1114845

Refit

1. Clean the junction surface between the cylinder block and the bearing seat.
2. Read the main bearing bore group from the position shown.

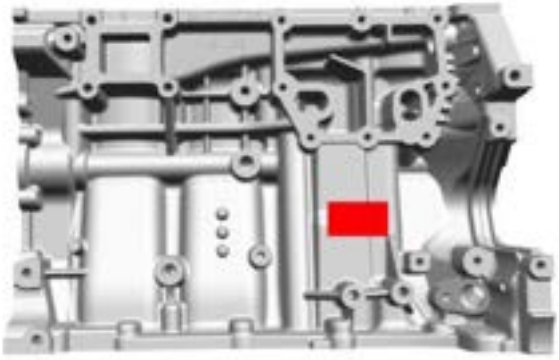
S1115368

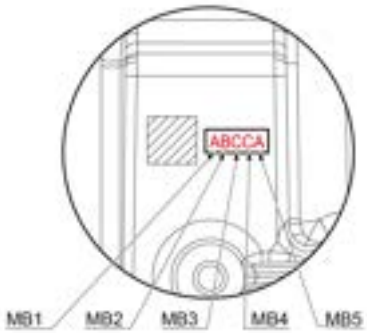

S1114982

3. Read the group of main bearing bore (red) of the crankshaft from the area shown.

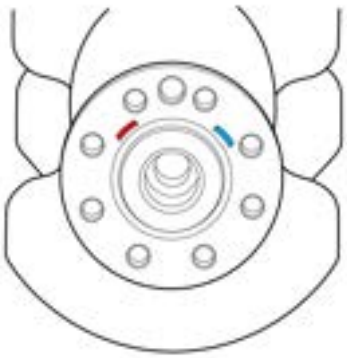

S1114983

4. According to the cylinder block bearing bore group and the crankshaft journal group, select the corresponding upper and lower bearing shells from the selection table.

Main Bearing Shell Selection Table					
			Main Bearing Journal Group		
			1	2	3
Main Bearing Bore Group	A	Upper	Yellow	Yellow	Yellow
		Lower	Green	Black	Yellow
	B	Upper	Black	Black	Black
		Lower	Green	Black	Yellow
	C	Upper	Green	Green	Green
		Lower	Green	Black	Yellow

5. Fix the main bearing shell to the cylinder block bearing seat, and ensure that the bearing shell oil hole is aligned with the bearing seat oil hole.
6. After the thrust plates are coated with lubricant, fit two thrust plates into both sides of the cylinder block thrust gear respectively, with the alloy surface of the thrust plates away from the mounting surface of the cylinder block.
7. Apply clean engine oil to the bearing shell.
8. Fit the crankshaft.
9. Place the 5th gear main bearing cap on the engine block bearing gear. Pay attention to the arrow and numbers on the main bearing cap. The arrow points to the front end of the engine block, and the numbers correspond to the sequence of the engine block bearing gears.
10. Fit 10 new bolts fixing the main bearing shell to the engine, tighten them to **30Nm+90°** , and check the torque.
11. Rotate the crankshaft so that the crankshaft connecting rod journal is at the bottom dead centre.
12. Push the piston connecting rod assembly to the bottom dead centre of the cylinder liner, so that the connecting rod big end fits the crankshaft connecting rod journal. Check the connecting rod selection table.

Piston Connecting Rod Piston Check Piston Measurement Piston Ring Measurement Connecting Rod Check Connecting Rod Measurement

13. Fit the bearing shell to the connecting rod big end shell cover, fix the connecting rod big end shell cover to the connecting rod big end, fit 2 bolts, tighten them to **15Nm+ (86-94) °** , and check the torque.

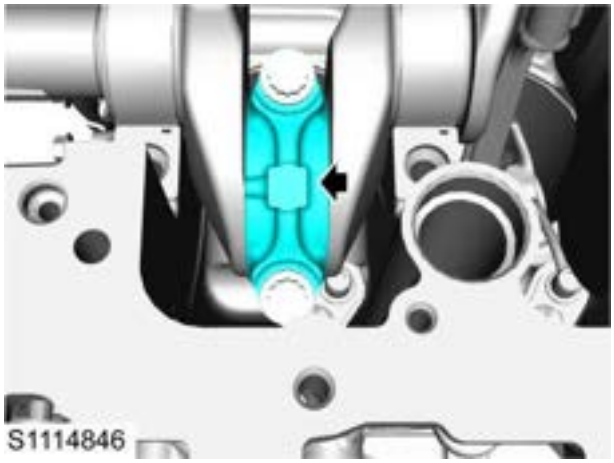

S1114846

14. Turn the crankshaft to ensure that the crankshaft connecting rod rotates freely without sticking.
15. Fit the lower crankcase oil baffle.

Lower Crankcase Oil Baffle Refit

16. Fit the oil pump.

Oil Pump Refit

17. Fit the rear crankshaft oil seal.

Rear Crankshaft Oil Seal Refit

18. Fit the crankshaft sprocket.

Crankshaft Sprocket Refit

Remove
Refit

Lower Crankcase Oil Baffle Assembly

Remove

1. Remove the oil pan.

☞Oil Pan Remove

2. Remove 1 bolt fixing the lower crankcase oil baffle to the engine, remove the oil baffle, and discard the oil baffle assembly.

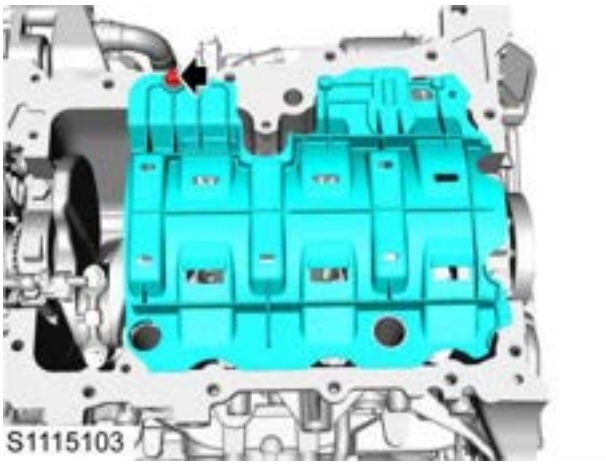

Refit

1. Use a new oil baffle assembly.
2. Fit 1 bolt fixing the lower crankcase oil baffle to the engine, tighten it to **8-12Nm** , and check the torque.
3. Fit the oil pan.

☞Oil Pan Refit

Oil Pan

Remove

1. Remove the engine oil filter.

☞ **Engine Oil Filter Remove**

2. Remove the compressor.

☞ **Compressor Remove**

3. Remove the rear crankshaft oil seal.

☞ **Rear Crankshaft Oil Seal Remove**

4. Remove 2 bolts fixing the pipeline to the oil pan.

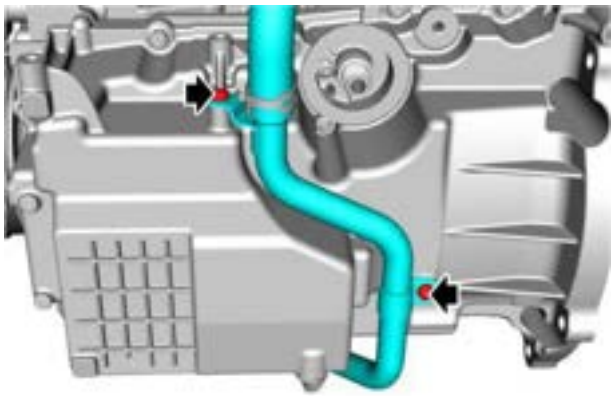

S1115100

5. Remove 15 bolts (1) fixing the oil pan to the cylinder block.
6. Remove and discard 2 bolts (2) fixing the oil pump to the oil pan.

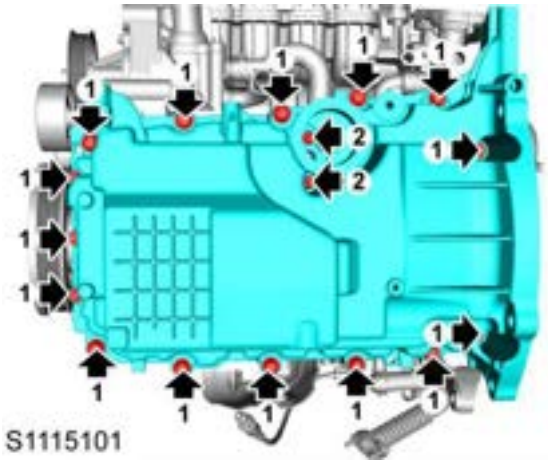

S1115101

7. Remove the seal ring from the oil pan, and discard the seal ring.

Refit

1. Clean the sealant surface of the oil pan and skirt rack with a clean non-woven cloth, and confirm that the junction surface is clean without defects, oil stains, water stains, debris and cleaning residues, etc.
2. Apply sealant (Loctite 5970) to the surface of the oil pan parts as shown with a width of 4-5mm, and complete the assembly within 8 minutes.

S1115102

3. Fit 15 large bolts fixing the oil pan to the cylinder block, tighten the bolts (1) in the figure to **8-12Nm** , tighten the bolts (2) in the figure to **22-28Nm** , tighten the bolts (3) in the figure to **13-17Nm** , and check the torque.

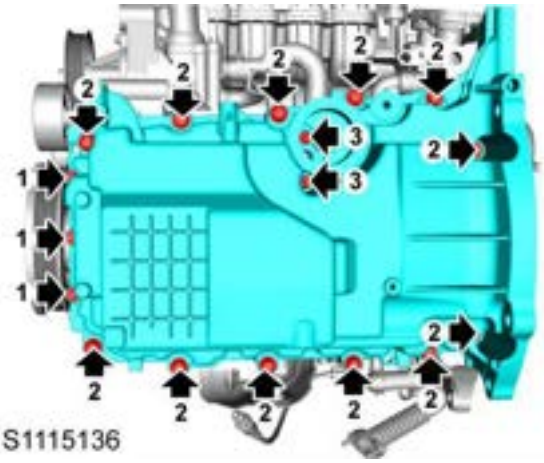

S1115136

4. Fit the rear crankshaft oil seal.

☞ **Rear Crankshaft Oil Seal Refit**

5. Fit the compressor.

☞ **Compressor Refit**

6. Fit the engine oil filter.

☞ **Engine Oil Filter Refit**

Camshaft Cover GS62

Remove

1. Remove the ignition coil.

☞ Ignition Coil

2. Remove the oil separator assembly.

☞ Oil Separator Assembly Remove

3. Remove the intake/exhaust camshaft position sensor.

☞ Camshaft Position Sensor

4. Remove the oil filler cap.
5. Remove the upstream oxygen sensor from the bracket.
6. Remove 1 screw (1) fixing the upstream oxygen sensor bracket to the camshaft cover.
7. Remove 1 nut (2) fixing the engine coolant overflow pipe assembly bracket to the camshaft cover.

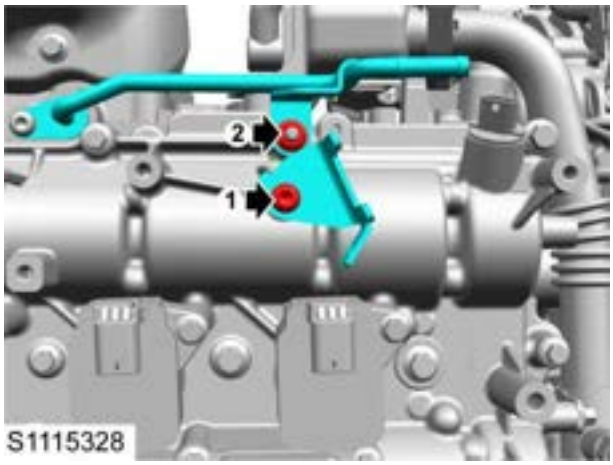

8. Remove 1 bolt fixing the EGR module outlet pipe to the camshaft cover.

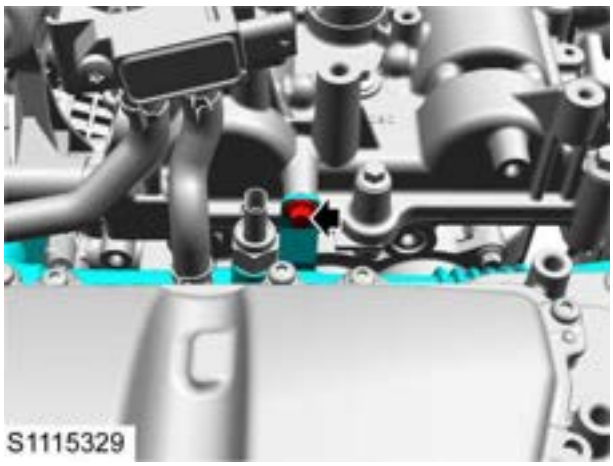

9. Remove 2 screws fixing the differential pressure sensor bracket to the camshaft cover.

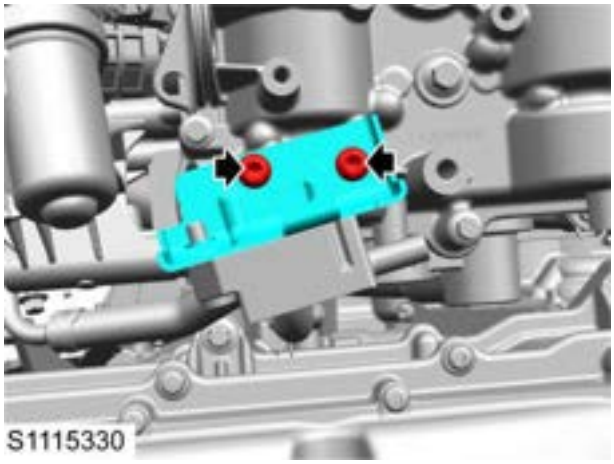

10. Remove the timing chain.

☞ Timing Chain Remove

11. Remove 18 bolts (1) fixing the camshaft cover to the cylinder head.
12. Remove 1 stud (2) fixing the camshaft cover to the cylinder head.

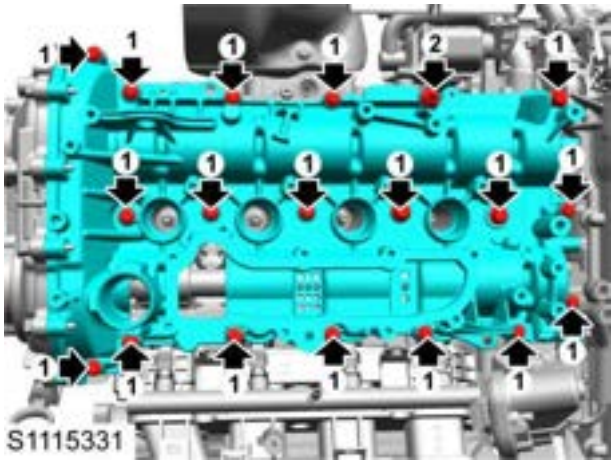

13. Remove and discard the camshaft cover gasket.

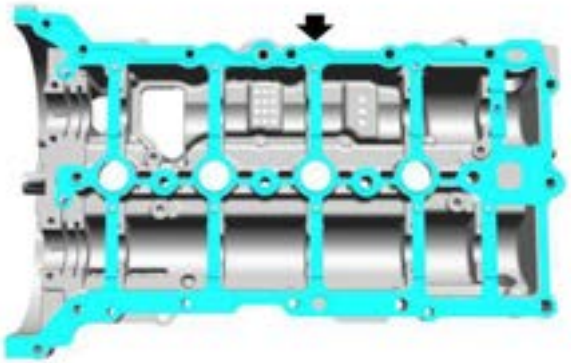

14. If the camshaft should be removed, refer to the Camshaft section.

☞ Camshaft Remove

Refit

1. If the camshaft should be assembled, refer to the Camshaft section.

Camshaft Refit

2. Fit a new gasket.
3. Fit the camshaft cover in place with the special tool TPT00308 .
4. Fit 1 stud and 18 bolts fixing the camshaft cover to the cylinder head in the sequence shown.
5. Tighten the studs 3, 4, 10 and 12 in the figure to **8-12Nm** , tighten the bolts 7, 8, 13 and 17 in the figure to **22-28Nm** , tighten the remaining bolts to **8-12Nm** , and check the torque.
6. Fit the timing chain.

Timing Chain Refit

7. Fit 1 bolt fixing the EGR module outlet pipe to the camshaft cover, tighten it to **8-12Nm** , and check the torque.
8. Fit 2 screws fixing the differential pressure sensor bracket to the camshaft cover, tighten them to **8-12Nm** , and check the torque.
9. Fit 1 nut fixing the engine coolant overflow pipe assembly bracket to the camshaft cover, tighten it to **8-12Nm** , and check the torque.
10. Fit 1 screw fixing the upstream oxygen sensor bracket to the camshaft cover, tighten it to **8-12Nm** , and check the torque.
11. Fit the upstream oxygen sensor to the bracket.
12. Fit the oil filler cap.
13. Fit the intake/exhaust camshaft position sensor.

Camshaft Position Sensor

14. Fit the oil separator assembly.

Oil Separator Assembly Refit

15. Fit the ignition coil.

Ignition Coil

Crankshaft Vibration Damper

Remove

1. Fix the crankshaft pulley with the special tool TEN00135 .

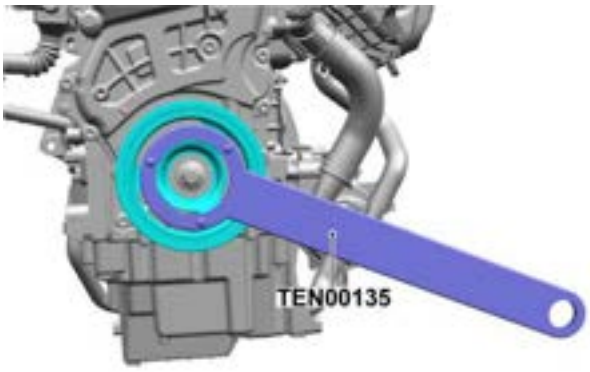

S1115339

2. Remove and discard 1 bolt fixing the crankshaft pulley to the engine.

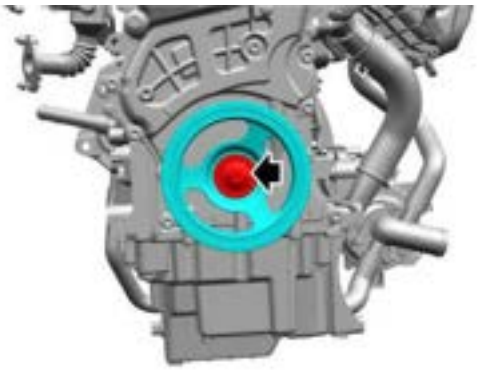

S1115340

3. Remove the crankshaft pulley.

Refit

1. Push the crankshaft pulley to the crankshaft sprocket.
2. Fix the crankshaft pulley with the special tool TEN00135 .

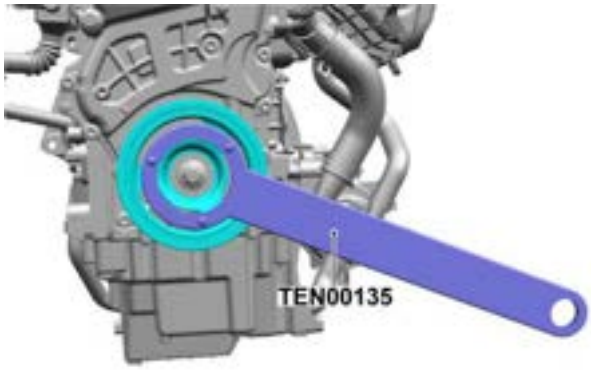

S1115339

3. Fit 1 new bolt fixing the crankshaft pulley to the engine, tighten it to **(95-105) Nm+ (146-154) °** , and check the torque.
4. Remove the special tool TEN00135 .

Front Timing Cover

Remove

1. Disconnect the negative battery cable.
2. Drain the engine oil.

☞Engine Oil Filter Remove

3. Remove the camshaft phase adjustment solenoid valve magnet.

☞Camshaft Phase Adjustment Solenoid Magnet

4. Remove the oil pan.

☞Oil Pan Remove

5. Remove the engine mount.

☞Powertrain Mount Remove

6. Remove 5 large bolts fixing the timing chain cover to the engine.

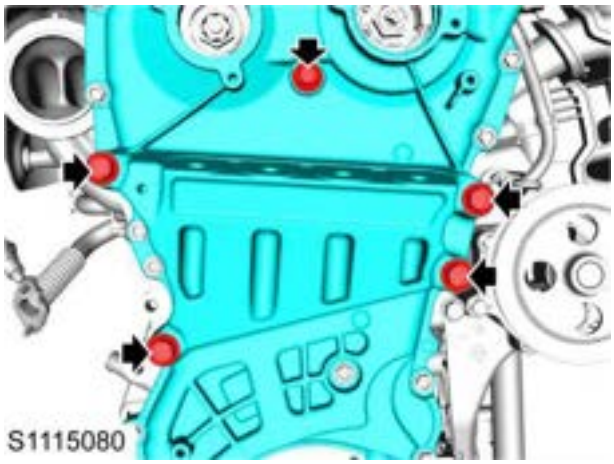

7. Remove 21 bolts fixing the timing chain cover to the engine.

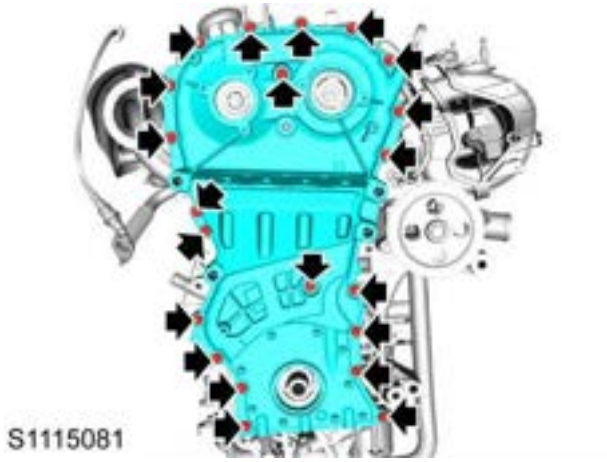

8. Remove 3 screws fixing the oil dipstick tube to the timing chain cover.

Refit

1. Clean the junction surface of timing cover on the engine body side with a clean non-woven cloth, and confirm that the junction surface is clean without defects, oil stains, water stains, debris and cleaning residues, etc.
2. Apply sealant to the junction surface. Apply sealant (Loctite 5970) as shown with a width of 4-5mm, and complete the assembly within 8 minutes.

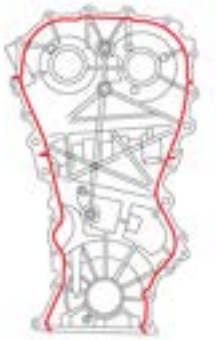

3. Fit 3 screws fixing the oil dipstick tube to the timing chain cover, tighten them to **8-12Nm** , and check the torque.
4. Fit 26 bolts fixing the front timing cover to the engine in the sequence shown, tighten the bolts numbered 5 in the figure to **27-33Nm** , tighten the bolts numbered 1/2/3/4 in the figure to **55-65Nm** , tighten the remaining bolts to **13-17Nm** , and check the torque.

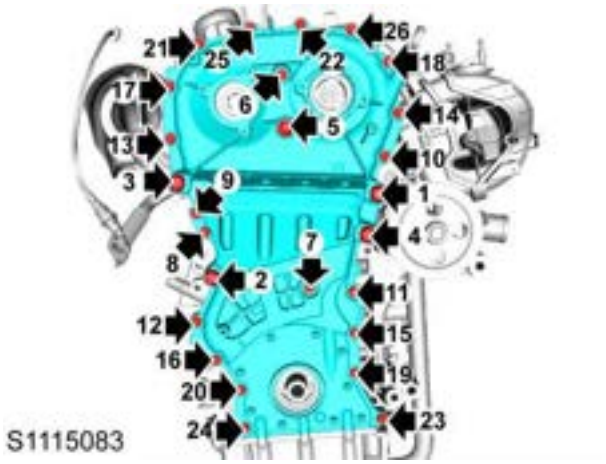

5. Fit the engine mount.

☞**Powertrain Mount Refit**

6. Fit the oil pan.

☞**Oil Pan Refit**

7. Fit the camshaft phase adjustment solenoid valve magnet.

☞**Camshaft Phase Adjustment Solenoid Magnet**

8. Refill the engine oil.

☞**Engine Oil Filter Refit**

9. Fit the negative battery cable.

Remove

1. Remove the front timing cover.

☞**Front Timing Cover Remove**

2. Remove 3 screws fixing the oil dipstick tube to the front timing cover.

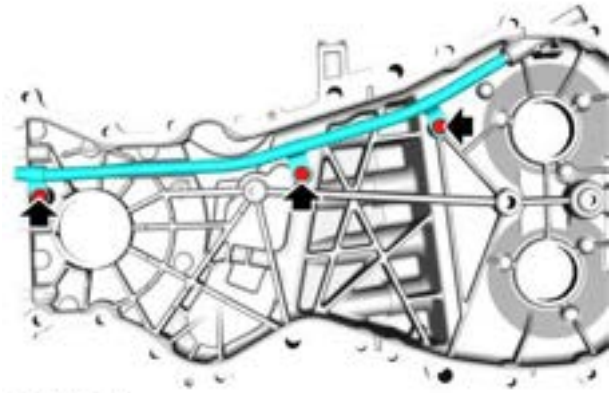

S1114864

Refit

1. Fit 3 screws fixing the oil dipstick tube to the front timing cover, tighten them to **8-12Nm** , and check the torque.
2. Fit the front timing cover.

☞**Front Timing Cover Refit**

Intake and Exhaust Valves

Remove

1. Remove the cylinder head.

☞Cylinder Head Remove

2. With a viscous magnet, remove 16 rocker arms from the cylinder head, and store them in the order they were removed.

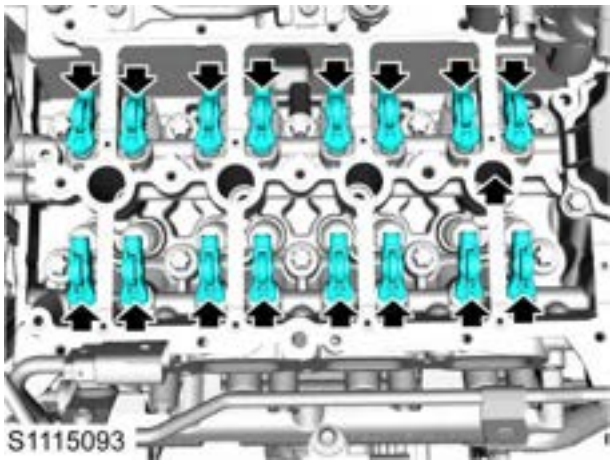

3. Compress the valve spring with the valve spring remover and installer, remove the lock plate, loosen the valve spring, and remove the valve remover and installer.

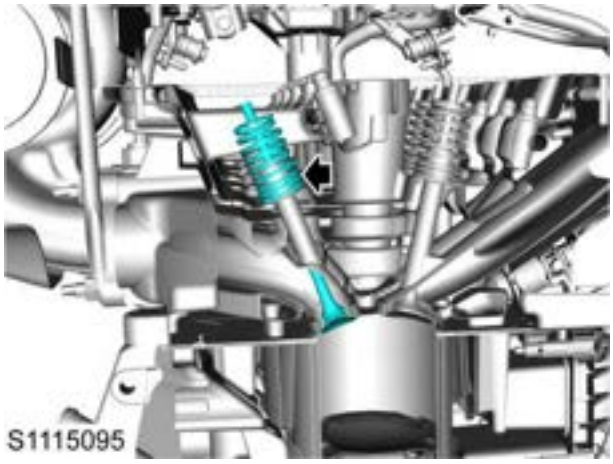

4. Check the valve oil seal and replace it if necessary.

Refit

1. Check the valve mechanism.

☞Valve Valve Check Valve Guide Measurement Overview of Valve Measurement and Reconditioning Measurement Procedure for Valve Seat Width Measurement Procedures for Valve Head Outer Diameter and Chamfer Measurement Procedure for Valve-to-Valve Seat Concentricity Reconditioning Procedure for Valve and Valve Seat Measurement Procedure for Valve Stem Height

2. Make sure that the valve, valve spring, spring cap and lock clamp are clean.
3. Lubricate the valve and valve stem oil seals.
4. Fit the valve stem oil seal to the valve guide, and use a suitable tool to tap the valve oil seal until the bottom surface fits the cylinder head. Note that the force applied during the press fitting should be parallel to the axial direction of the valve guide.
5. Fit the valve spring and valve spring cap, and fix the valve remover and installer to the valve and compression spring.
6. Compress the valve spring with the valve remover and installer, fit the valve lock clamp, and remove the valve remover and installer.
7. Fit the cylinder head.

☞Cylinder Head Refit

Timing Chain

Remove

1. Remove the front timing cover.

☞Front Timing Cover Remove

2. Fully press the timing chain tensioner, and block it with a stop pin.
3. Remove 1 bolt (1) fixing the timing chain left guide rail to the engine.
4. Remove 2 bolts (2) fixing the timing chain right guide rail to the engine.

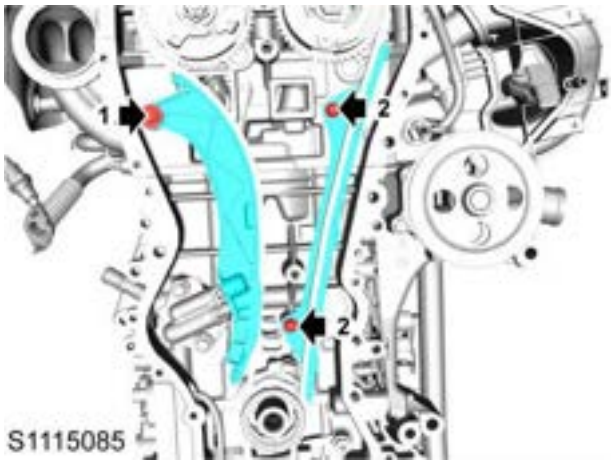

5. Remove the timing chain.
6. Check the chain upper guide rail and replace it if necessary.

Refit

1. Rotate the intake/exhaust camshaft clockwise to the horizontal left/right position marked on the cover plate of the intake/exhaust phase modulator.

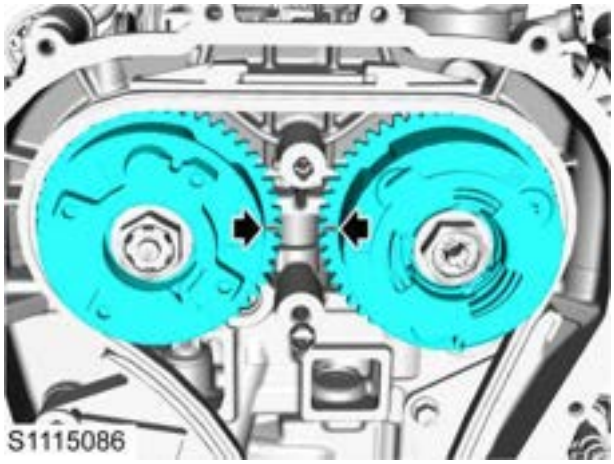

2. Fix the intake/exhaust phase modulator timing position with the special tool TPT00315 .

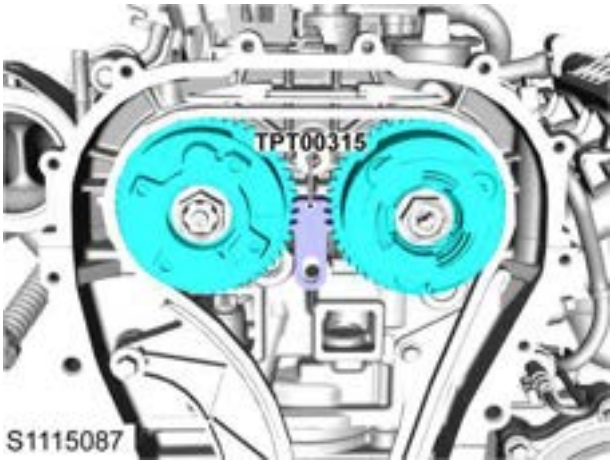

3. Align the dot on the intake/exhaust phase modulator with the painted part of the timing chain.

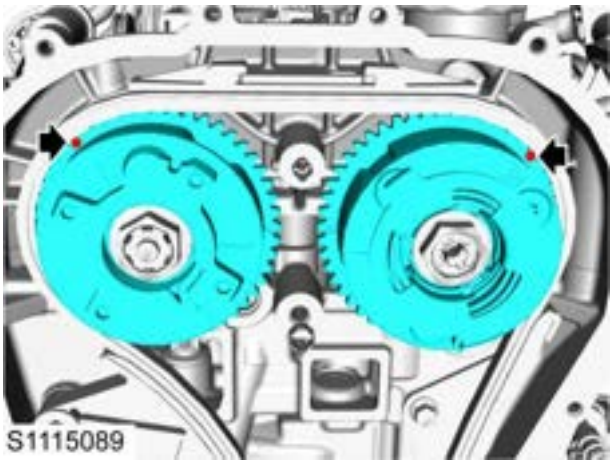

4. Rotate the crankshaft to align the dot mark of the crankshaft sprocket with the painted part of the timing chain.

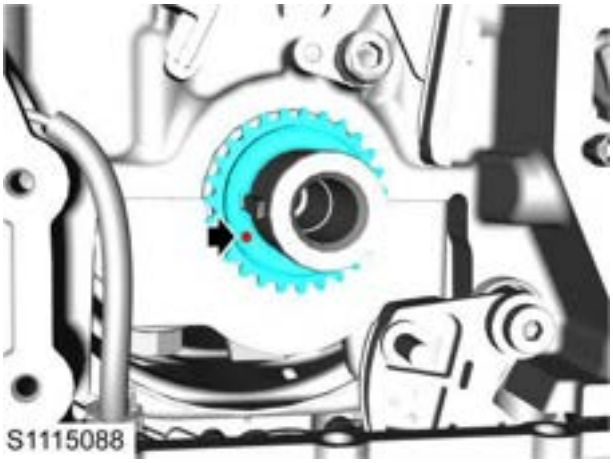

5. Fit 2 bolts fixing the timing chain right guide rail to the engine, tighten them to **8-12Nm** , and check the torque.
6. Fit 1 bolt fixing the timing chain left guide rail to the engine, tighten them to **22-28Nm** , and check the torque.
7. Remove the special tool TPT00315 .
8. Fit the front timing cover.

☞Front Timing Cover Refit

Camshaft Phase Adjustment Actuator

Remove

1. Remove the camshaft.

Camshaft Remove

2. Clamp the fixing point on the camshaft with the special tool TPT00317 , clamp the special tool with a bench vise, and remove the solenoid valve body fixing the phase adjustment actuator (the valve body is also used as a bolt). Discard the valve body fixing the phase modulator.

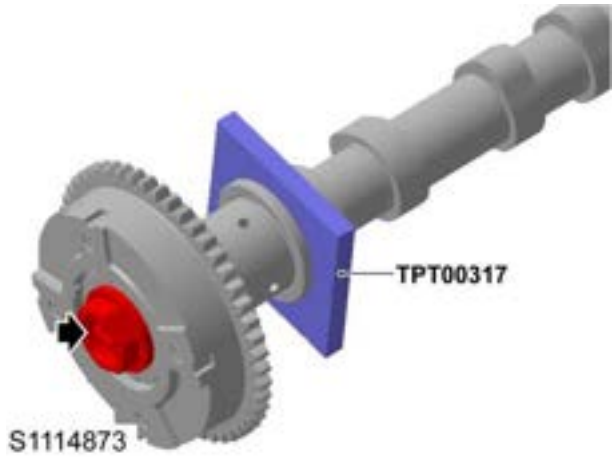

Refit

1. Check all parts for bumps, oil stains, rust or impurity before assembly. Do not use the parts with bumps. Wipe off the oil stains if any.
2. Fit the exhaust camshaft phase adjustment actuator to the exhaust camshaft, and the intake camshaft phase adjustment actuator to the intake camshaft respectively. Align the actuator with the locating pin hole at the front end of camshaft and push it in, screw and pretighten the phase adjustment actuator fixing valve.
3. Clamp the fixing point on the camshaft with the special tool TPT00317 , clamp the special tool with a bench vise, tighten the intake phase adjustment actuator fixing valve to **(48-52) Nm+ (23-27) °** , tighten the exhaust phase adjustment actuator fixing valve to **(48-52) Nm+ (23-27) °** , and check the torque.
4. Fit the camshaft.

Camshaft Refit

Timing Chain Tensioner

Remove

1. Remove the front timing cover.

☞Front Timing Cover Remove

2. Remove 2 bolts fixing the timing chain tensioner to the engine.

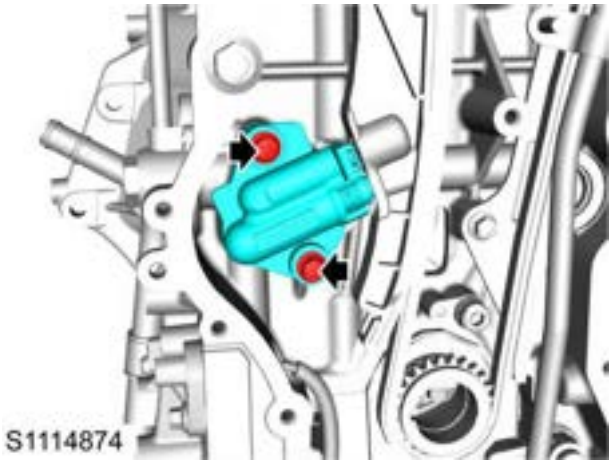

Refit

1. Refer to the Timing Chain section to recalibrate the timing.
2. Rotate the intake/exhaust camshaft clockwise roughly to the horizontal left/right position marked on the cover plate of the intake/exhaust phase modulator.

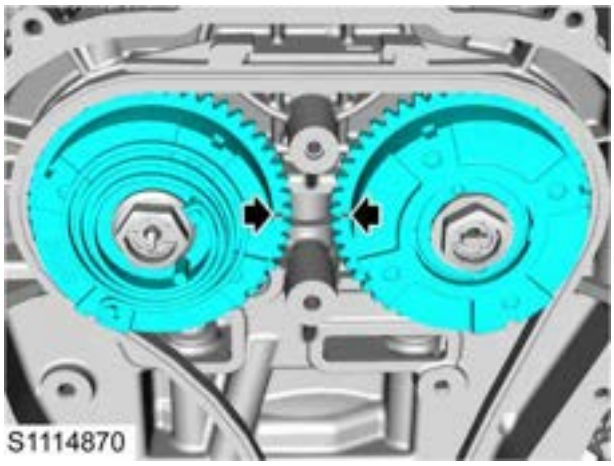

3. Fix the intake/exhaust phase modulator timing position with the special tool TPT00315 .

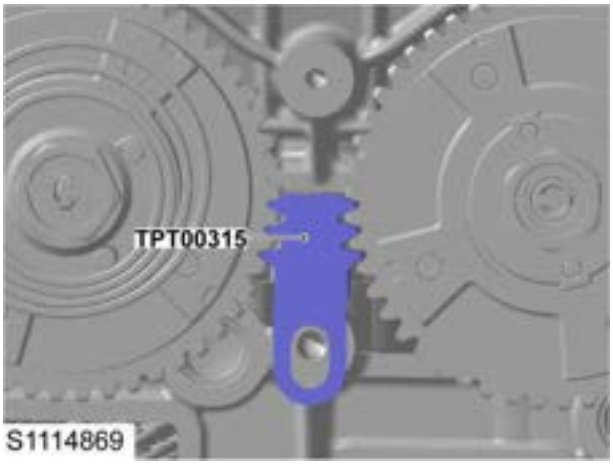

4. Align the dot on the intake/exhaust phase modulator with the painted part of the timing chain.

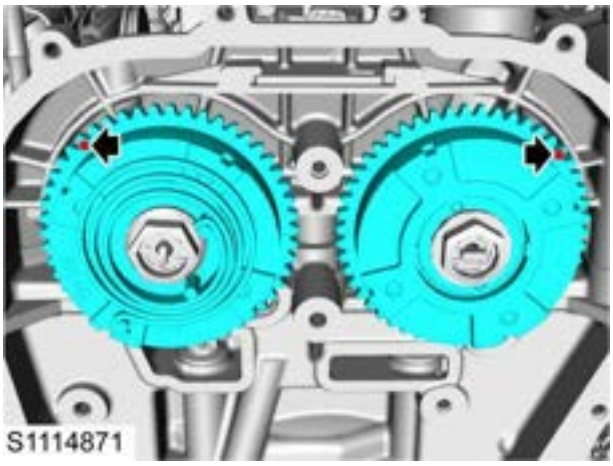

5. Rotate the crankshaft to align the dot mark of the crankshaft sprocket with the painted part of the timing chain.

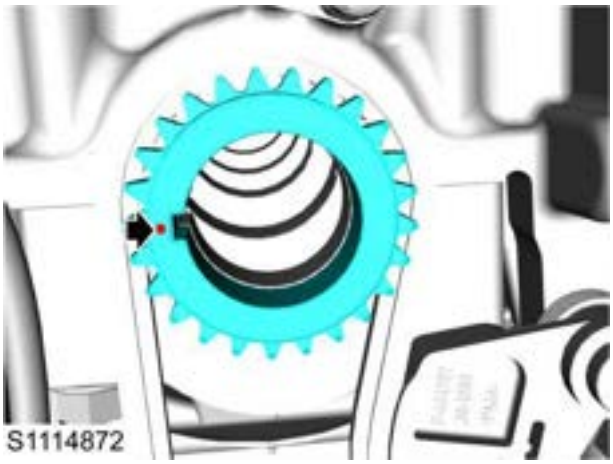

6. Fit 2 bolts fixing the timing chain tensioner to the engine, tighten them to **8-12Nm** , and check the torque.
7. Fit the front timing cover.

☞Front Timing Cover Refit

Crankshaft Sprocket (to Camshaft)

Remove

1. Remove the timing chain.

Timing Chain Remove

2. Remove the crankshaft sprocket.

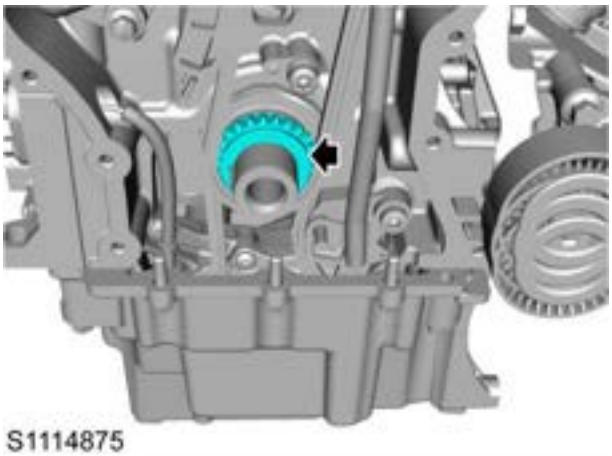

Refit

1. Fit the crankshaft sprocket.
2. Fit the timing chain.

Timing Chain Refit

Remove

1. Remove the oil pan.

☞Oil Pan Remove

2. Remove the crankshaft sprocket.

☞Crankshaft Sprocket Remove

3. Remove 1 bolt fixing the oil pump chain tensioner to the engine.

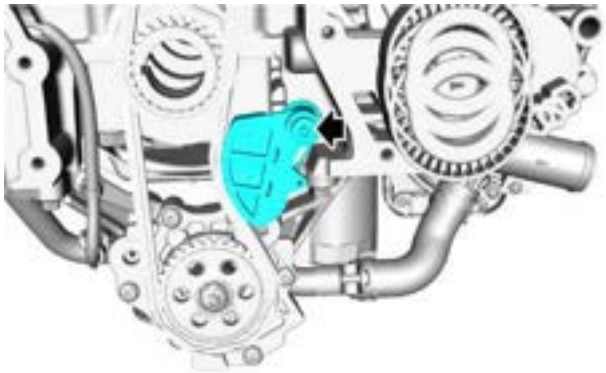

S1114876

4. Remove the oil pump chain, and then remove the crankshaft sprocket.

S1114877

Refit

1. Fit the crankshaft sprocket. Note that the side with the boss faces the operator.
2. Fit 1 bolt fixing the oil pump chain tensioner to the engine, tighten them to **8-12Nm** , and check the torque.
3. Fit the crankshaft sprocket.

☞Crankshaft Sprocket Refit

4. Fit the oil pan.

☞Oil Pan Refit

Camshaft

Remove

1. Remove the front timing cover.

☞Front Timing Cover Remove

2. Remove the camshaft cover.

☞Camshaft Cover Remove

3. Remove 24 screws fixing the camshaft bracket to the camshaft cover.

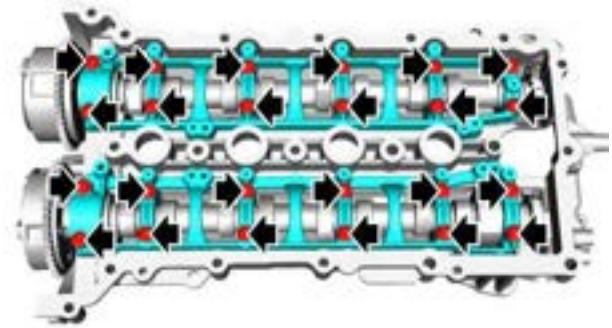

S1115090

4. Fit bolts in the specified positions as shown to push out the camshaft bracket. Do not pry out the camshaft bracket directly, otherwise the camshaft bearing support will be damaged. If the camshaft fixing bracket is deformed, it must be replaced.

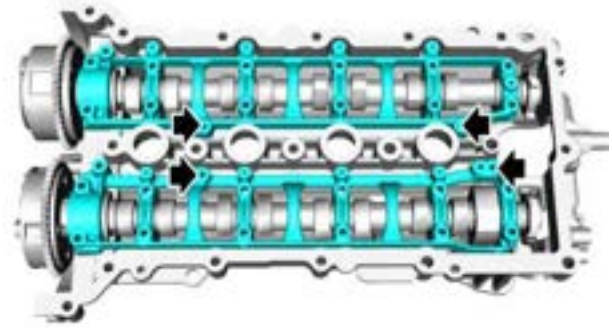

S1115091

5. If the camshaft phase adjustment actuator should be removed, refer to the Camshaft Phase Adjustment Actuator section.

☞Camshaft Phase Adjustment Actuator Remove

Refit

1. If the camshaft phase adjustment actuator should be fitted, refer to the Camshaft Phase Adjustment Actuator section.

☞Camshaft Phase Adjustment Actuator Refit

2. Before assembly, check all parts for bumps, oil stains, rust, and dirt. Do not use the parts with bumps. Wipe off the oil stains if any.
3. Apply a small amount of oil evenly to all bearing bores and thrust surfaces on the intake side of the camshaft cover.
4. Place the intake camshaft in the cover, align the camshaft thrust plate with the camshaft cover slot, and make the camshaft dihedron in the vertical direction and the cam lobe of Cylinder 1 face the exhaust side.
5. Place the exhaust camshaft in the cover, align the camshaft thrust plate with the camshaft cover slot, make the front timing slot close to the 6 o'clock direction, and apply a small amount of oil evenly to the camshaft journal and camshaft.
6. Align the front and rear locating pins, and fit the camshaft bracket.
7. Fit 24 screws fixing the camshaft bracket to the camshaft cover in the sequence shown, tighten them to **8-12Nm** , and check the torque.

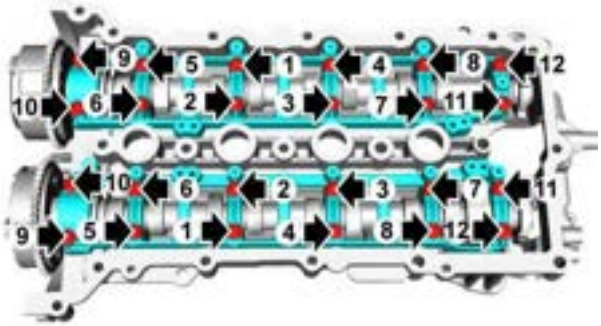

S1115092

8. Fit the camshaft cover.

☞Camshaft Cover Refit

9. Rotate the intake/exhaust camshaft clockwise to the horizontal left/right position marked on the cover plate of the intake/exhaust phase modulator.

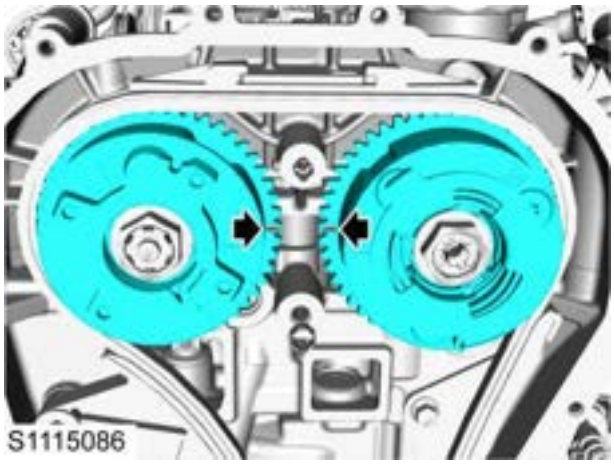

S1115086

10. Fix the intake/exhaust phase modulator timing position with the special tool TPT00315 .

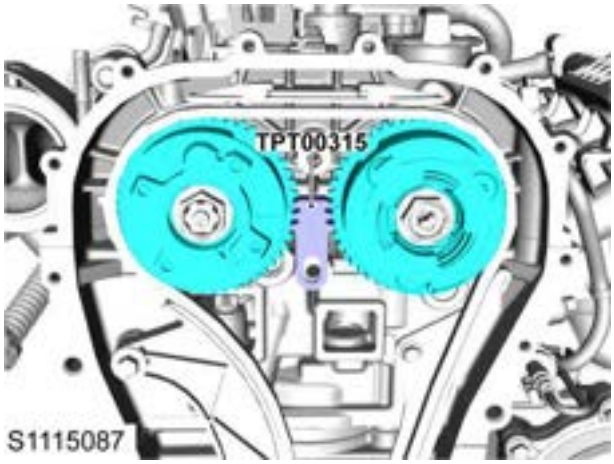

11. Align the dot on the intake/exhaust phase modulator with the painted part of the timing chain.

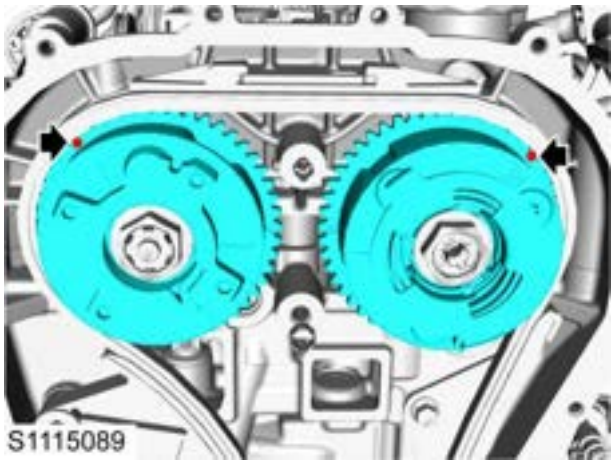

12. Rotate the crankshaft to align the dot mark of the crankshaft sprocket with the painted part of the timing chain.

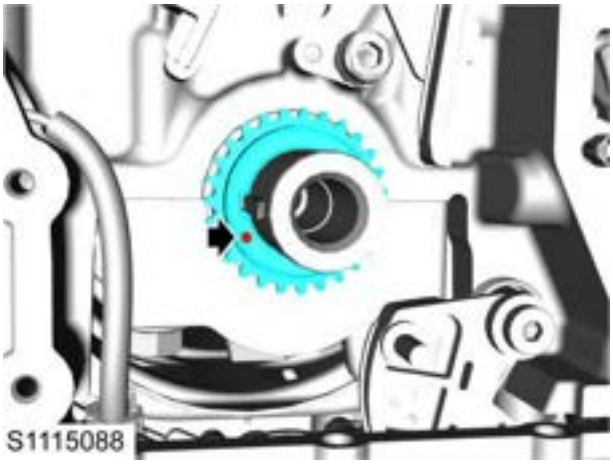

13. Fit the front timing cover.

☞**Front Timing Cover Refit**

Hydraulic Tappet

Remove

1. Remove the camshaft.

☞Camshaft Remove

2. Remove the rocker arm.

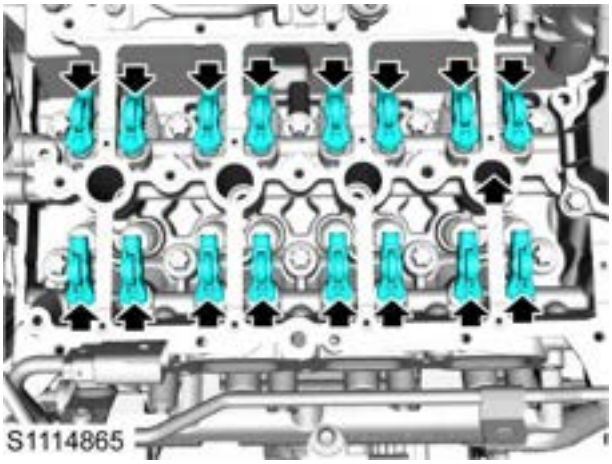

3. Remove the hydraulic tappet.

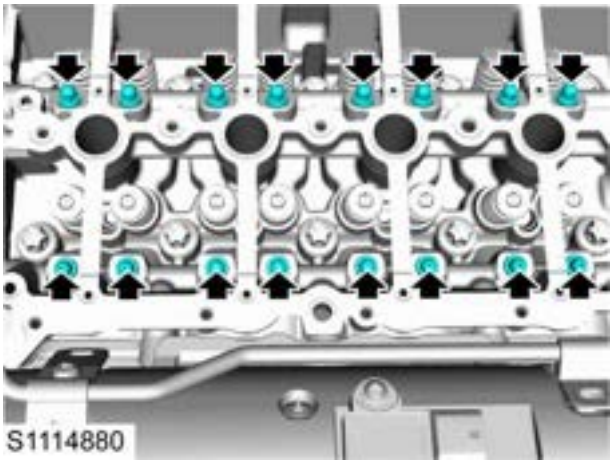

Refit

1. Clean the valve drive rocker arm, valve hydraulic tappet and seat hole, and apply clean lubricating oil.
2. Fit the valve hydraulic tappet to the seat hole in the cylinder head.
3. Fit the valve drive rocker arm to the valve stem tip and valve hydraulic tappet.
4. Fit the camshaft.

☞Camshaft Refit

Remove

1. Remove the EGR valve outlet pipe.

☞EGR Valve Outlet Pipe

2. Remove the manifold pressure/temperature sensor.

☞Manifold Pressure/Temperature Sensor

3. Remove the canister solenoid.

☞Canister Solenoid

4. Remove the electronic throttle.

☞Electronic Throttle

5. Remove the harness clips from the intake manifold.
6. Remove 5 bolts fixing the intake manifold to the engine.

7. Remove the intake manifold and discard the intake manifold gasket.

Refit - GS62

1. Fit the new intake pipe gasket.
2. Fit 5 bolts fixing the intake manifold to the engine, tighten them to **22-28Nm** , and check the torque.
3. Fit the harness clips to the intake manifold.
4. Fit the electronic throttle.

☞Electronic Throttle

5. Fit the canister solenoid valve.

☞Canister Solenoid Valve

6. Fit the manifold pressure/temperature sensor.

☞Manifold Pressure/Temperature Sensor

7. Fit the EGR valve outlet pipe.

☞EGR Valve Outlet Pipe

Piston Connecting Rod Assembly

Remove

1. Remove the cylinder head.

☞ Cylinder Head Remove

2. Remove the lower crankcase oil baffle.

☞ Lower Crankcase Oil Baffle Remove

3. Rotate the crankshaft so that the piston connecting rod assembly is at the bottom dead centre of the cylinder.
4. Remove and discard 8 bolts fixing the connecting rod big end shell covers to the connecting rod.

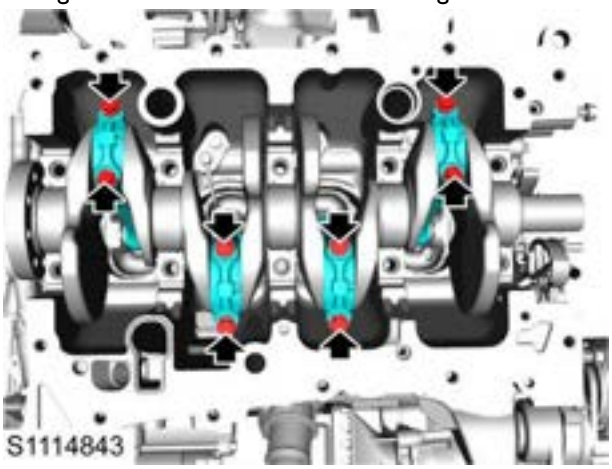

5. Remove the connecting rod big end shell covers, pay attention to the front marking, and place them in order.

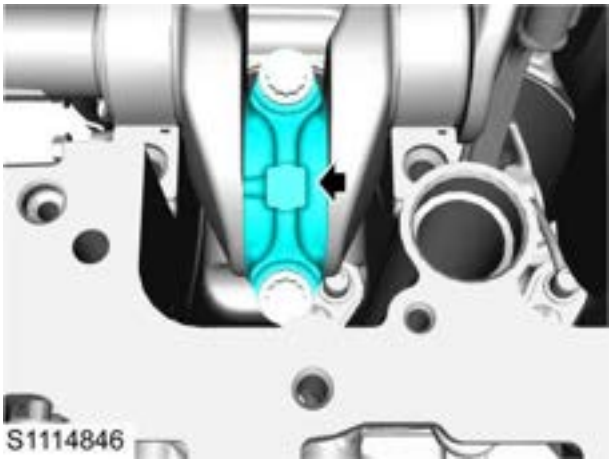

6. Remove the connecting rod upper and lower bearing shells.

7. Remove and discard the piston pin circlip.

8. Remove the top compression ring (1), secondary compression ring (2) and oil ring (3) from the piston.

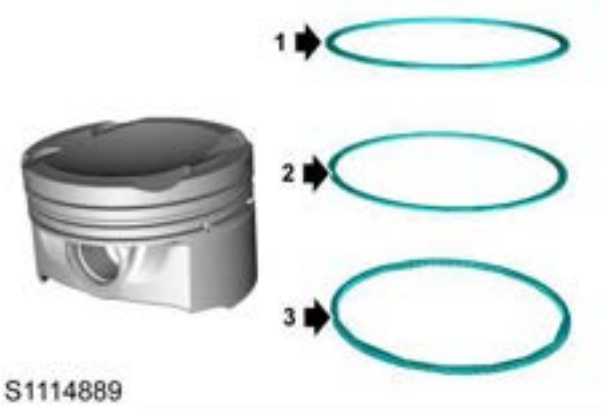

Refit

1. Before assembly, check all parts for bumps, oil stains, rust, and dirt. Do not use the parts with bumps. Wipe off the oil stains if any.
2. Read the mass group and bore diameter group on the connecting rod.

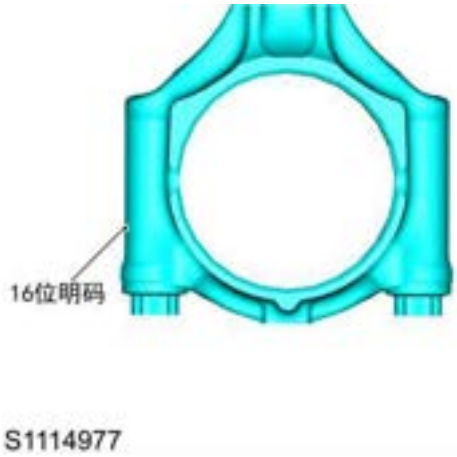

SN.	Character Meaning
1	Item code: F
2	Year, e.g.: K

3-5	Natural day, e.g.: 365
6	Bore diameter group code, e.g.: A
7-8	Weight group code, e.g.: 08
9-12	Serial number, e.g.: 1234
13-16	Last four digits of part number: 1329

3. Read the group of crankshaft connecting rod journal (blue area on the right) from the area shown.

S1114983

4. According to the connecting rod big end bore diameter group and the crankshaft connecting rod journal group, select the corresponding upper and lower connecting rod bearing shells from the selection table.

			Connecting Rod Journal Group	
			1 43.992-44	2 44-44.008
Connecting Rod Big End Bore Diameter Group	A 47.186-47.194	Upper	Brown	Green
		Lower	Brown	Green
	B 47.194-47.202	Upper	Yellow	Brown
		Lower	Yellow	Brown

5. Fit the oil ring, second compression ring and top compression ring into the piston ring groove from bottom to top. (Note: The piston ring mark shall point to the top surface of the piston!)
6. Ensure that the piston ring opening and the arrow on the top of the piston point to the front of the engine.

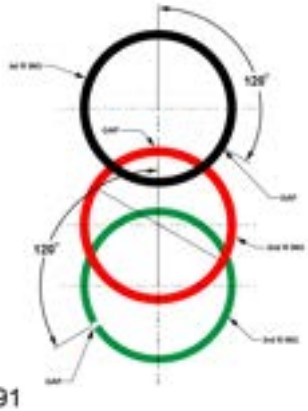

S1114891

7. Fit the piston pin and use a new circlip.
8. After applying lubricant to the inner wall of cylinder bore, fit the piston connecting rod assembly into the cylinder bore with the special tool T10016 . If the piston is not assembled into the cylinder smoothly or there is any resistance, the piston should be removed to check whether the piston rings are misaligned or damaged (especially the oil ring). If so, replace the piston rings.

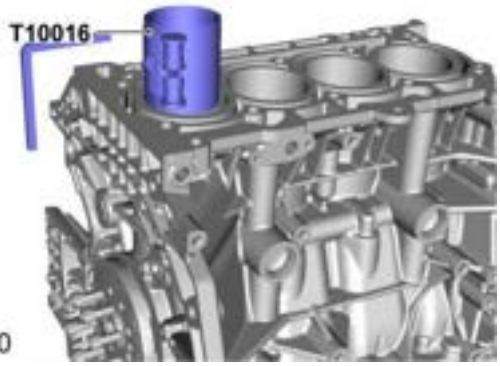

S1114890

9. Fit 8 new bolts fixing the connecting rod big end shell cover to the connecting rod, tighten them to **15Nm+ (85-95) °** , and check the torque.
10. Check whether the piston connecting rod is assembled in place. Rotate the crankshaft to ensure that the crankshaft connecting rod rotates freely without sticking.
11. Fit the lower crankcase oil baffle.

☞ **Lower Crankcase Oil Baffle Refit**

12. Fit the cylinder head.

☞ **Cylinder Head Refit**

Oil Pump Chain

Remove

1. Remove the oil pump chain tensioner.

Oil Pump Chain Tensioner Remove

2. Remove the oil pan.

Oil Pan Remove

3. Remove the oil pump chain.

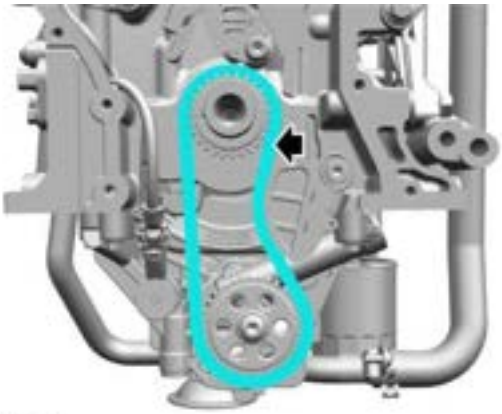

S1115172

Refit

1. Fit the oil pump chain.
2. Fit the oil pan.

Oil Pan Refit

3. Fit the oil pump chain tensioner.

Oil Pump Chain Tensioner Refit

Oil Pump Chain Tensioner

Remove

1. Remove the timing chain.

☞Timing Chain Remove

2. Remove 1 bolt fixing the oil pump chain tensioner to the engine.

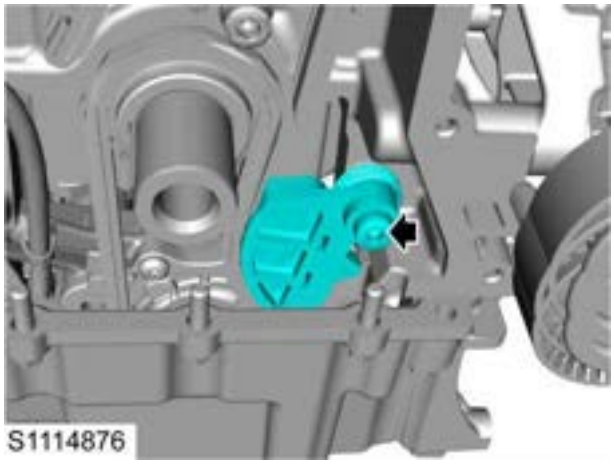

Refit

1. Fit 1 bolt fixing the oil pump chain tensioner to the engine, tighten them to **8-12Nm** , and check the torque.
2. Fit the timing chain.

☞Timing Chain Refit

Oil Pump

Remove

1. Remove the lower crankcase oil baffle assembly.

☞ Lower Crankcase Oil Baffle Assembly Remove

2. Remove 1 bolt fixing the oil pump sprocket to the oil pump.

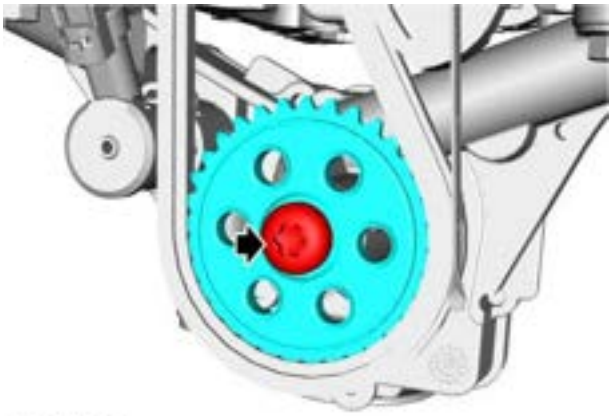

S1115108

3. Disconnect the harness (1) from the oil pump.
4. Remove 4 bolts (2) fixing the oil pump to the engine, and discard the seal ring of the oil pump and connecting pipe.

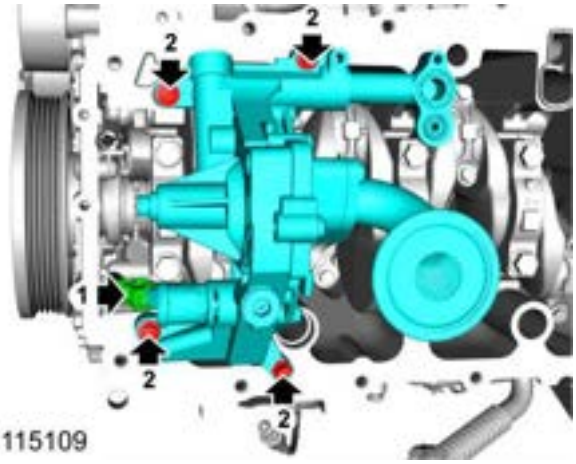

S1115109

Refit

1. Fit a new oil pump seal ring.
2. Fit 4 bolts fixing the oil pump to the engine, tighten them to **8-12Nm** , and check the torque.
3. Connect the harness to the oil pump.
4. Fit 1 bolt fixing the oil pump sprocket to the oil pump, tighten it to **22-28Nm** , and check the torque.
5. Fit the lower crankcase oil baffle assembly.

☞ Lower Crankcase Oil Baffle Assembly Refit

Remove

1. Remove the oil pan.

☞ **Oil Pan Remove**

2. Disconnect the harness (1) from the oil control valve harness.
3. Disconnect the oil control valve harness (2) from the oil pump.
4. Remove 1 bolt (3) fixing the oil pump control valve harness to the engine.

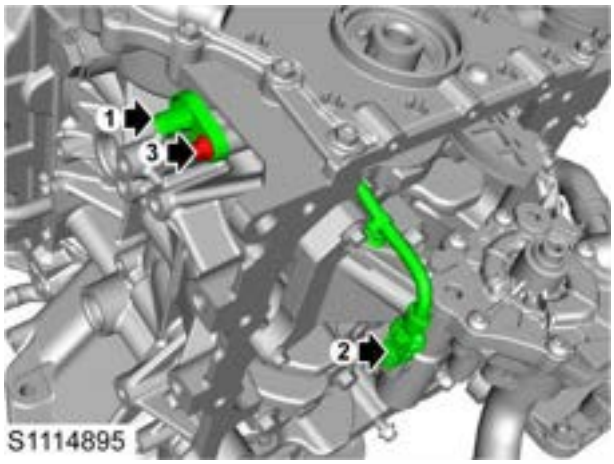

Refit

1. Fit 1 bolt fixing the oil pump control valve harness to the engine, tighten it to **8-12Nm** , and check the torque.
2. Connect the oil control valve harness to the oil pump.
3. Connect the harness to the oil control valve harness.
4. Fit the oil pan.

☞ **Oil Pan Refit**

Remove

1. Disconnect the negative battery cable.
2. Remove the oil pan.

☞ **Oil Pan Remove**

3. Disconnect the harness (1) from the oil pump flow control valve.
4. Remove the circlip (2) fixing the oil pump flow control valve.

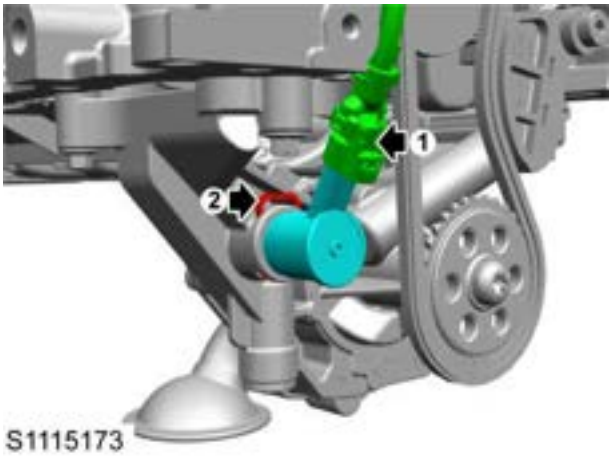

5. Remove the oil pump flow control valve.

Refit

1. Fit the circlip fixing the oil pump flow control valve.
2. Connect the harness to the oil pump flow control valve.
3. Fit the oil pan.

☞ **Oil Pan Refit**

4. Connect the negative battery cable.

Front Crankshaft Oil Seal

Remove

1. Remove the crankshaft shock absorber.

☞Crankshaft Shock Absorber Remove

2. Remove and discard the front crankshaft oil seal.

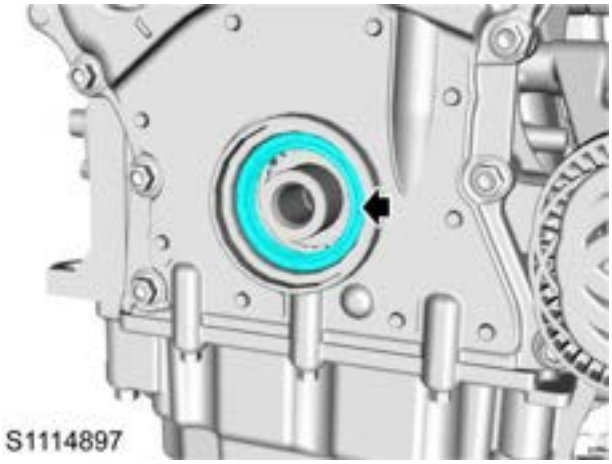

Refit

1. Fit the front crankshaft oil seal with the special tool TPT00318 , and apply lubricant on the surface in contact with the oil seal.

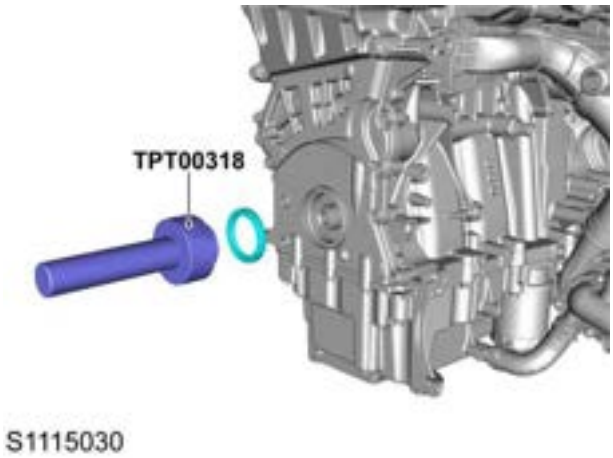

2. Fit the crankshaft shock absorber.

☞Crankshaft Shock Absorber Refit

Rear Crankshaft Oil Seal

Remove

1. Remove the flywheel.

Flywheel

2. Remove the crankshaft signal wheel.

3. Remove 8 bolts fixing the rear crankshaft oil seal to the engine, and discard the bolts and oil seal.

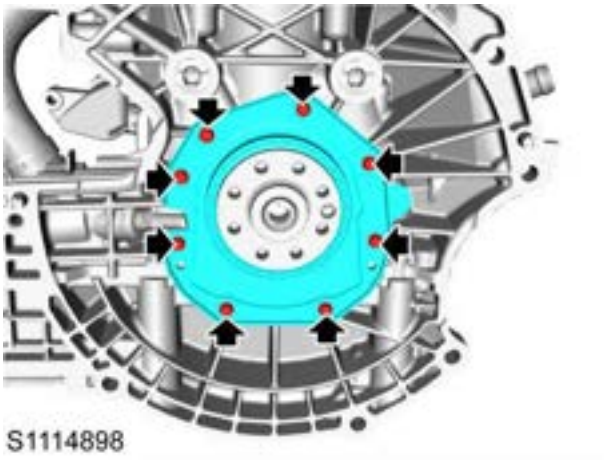

Refit

1. Clean the rear crankshaft oil seal and the sealant surface of the skirt rack and engine block with a clean non-woven cloth, and confirm that the junction surface is clean without defects, oil stains, water stains, debris and cleaning residues, etc.
2. Apply sealant (Loctite 5970) to the surface of the rear crankshaft oil seal parts as shown with a width of 3-4mm.

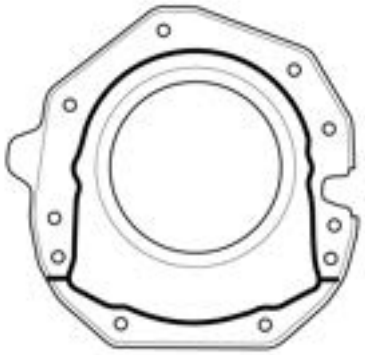

3. Fit the rear crankshaft oil seal with the special tool TEN00157 .

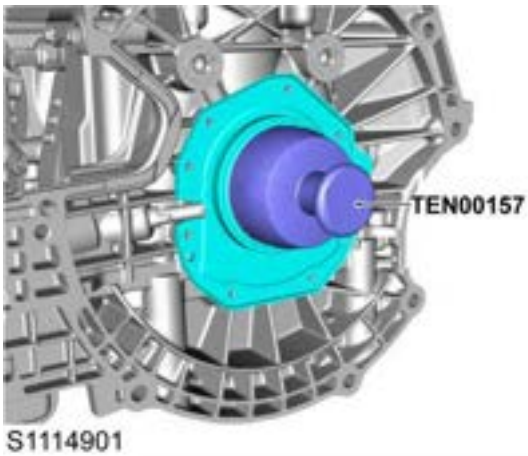

4. Fit 8 bolts fixing the rear crankshaft oil seal to the engine in the sequence as shown, tighten them to 7-9Nm, and check the torque.

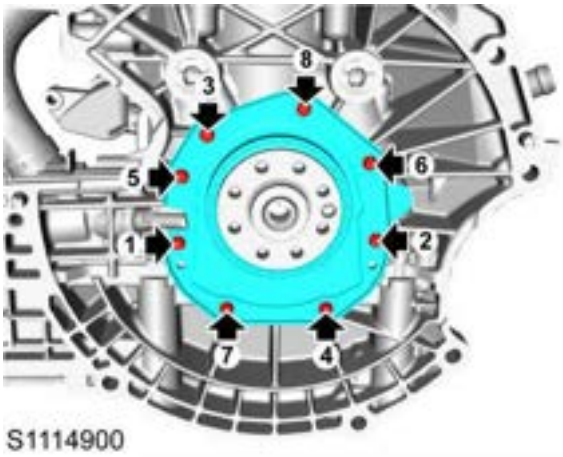

5. Fit the crankshaft signal wheel.
6. Fit the flywheel.

Flywheel

Remove

1. Remove the power electronic box.

☞Power Electronic Box Remove

2. Remove the EGR module outlet pipe.

☞EGR Module Outlet Pipe

3. Remove the coolant temperature sensor.

☞Coolant Temperature Sensor Remove - Transmission

4. Disconnect all pipelines from the thermostat housing.

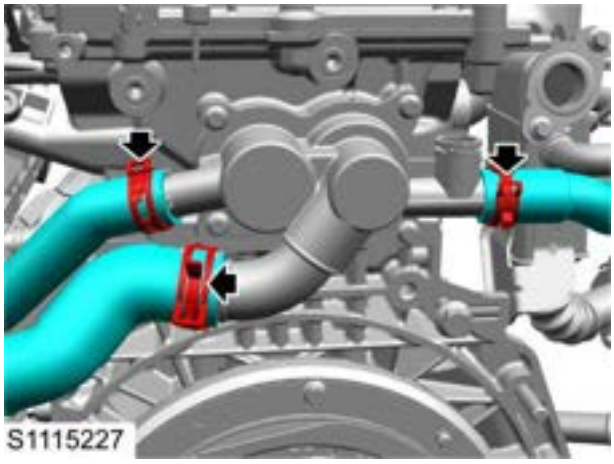

5. Remove 4 bolts fixing the thermostat housing to the engine.

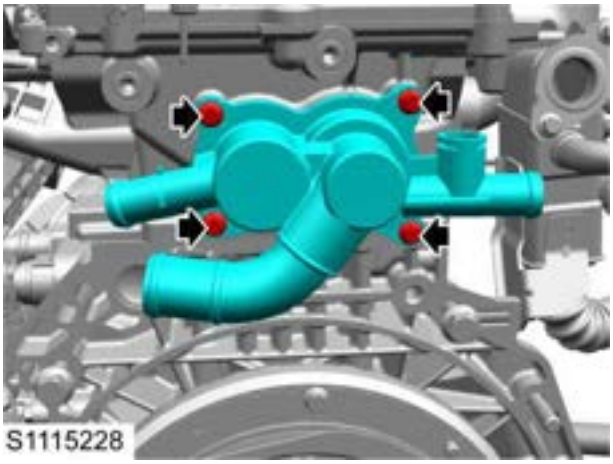

6. Remove the thermostat housing and discard the seal ring.

Refit

1. Fit a new seal ring.
2. Fit 4 bolts fixing the thermostat housing to the engine, tighten them to 8-12Nm, and check the torque.
3. Connect all pipelines to the thermostat housing.
4. Fit the coolant temperature sensor.

☞Coolant Temperature Sensor Refit - Transmission

5. Fit the EGR module outlet pipe.

☞EGR Module Outlet Pipe

6. Fit the power electronic box.

☞Power Electronic Box Refit

Remove

1. Drain the coolant.

☞Coolant Drain - ENG Refill - ENG Drain Refill

2. Disconnect the pipeline (1) from the engine coolant overflow pipe.
3. Remove 1 nut (2) fixing the engine coolant overflow pipe bracket to the engine.
4. Remove 1 bolt (3) fixing the engine coolant overflow pipe bracket to the engine.

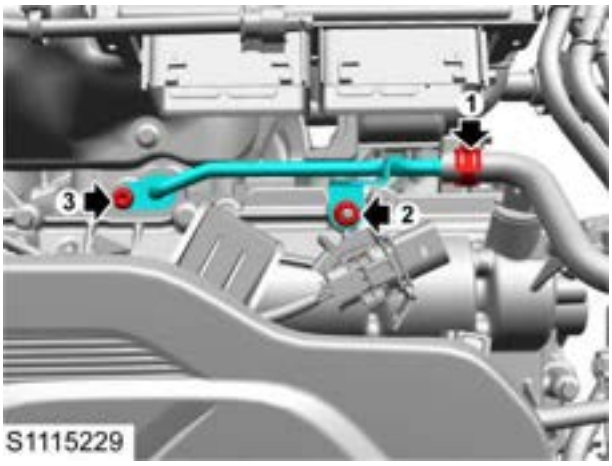

5. Remove the engine coolant overflow pipe and discard the O-ring.

Refit

1. Fit the engine coolant overflow pipe and a new O-ring.
2. Fit 1 bolt fixing the engine coolant overflow pipe bracket to the engine, tighten it to **8-12Nm** and check the torque.
3. Fit 1 nut fixing the engine coolant overflow pipe bracket to the engine, tighten it to **8-12Nm** and check the torque.
4. Connect the pipeline to the engine coolant overflow pipe.
5. Refill the coolant.

☞Coolant Drain - ENG Refill - ENG Drain Refill

Remove

1. Drain the coolant.

☞Coolant Drain - ENG Refill - ENG Drain Refill

2. Remove the intake manifold.

☞Intake Manifold Remove

3. Disconnect the pipeline from the oil cooler.

4. Remove 8 bolts fixing the oil cooler to the engine.

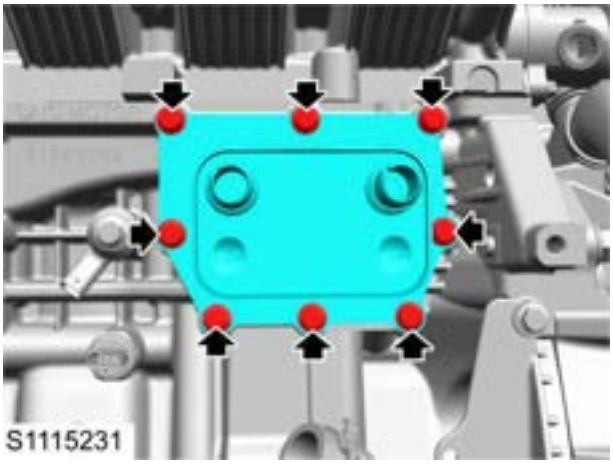

5. Remove the oil cooler and discard the gasket.

Refit

1. Fit a new gasket.
2. Fit 8 bolts fixing the oil cooler to the engine, tighten them to **10-14Nm** , and check the torque.
3. Connect the pipeline to the oil cooler.
4. Fit the intake manifold.

☞Intake Manifold Refit - GS62

5. Refill the coolant.

☞Coolant Drain - ENG Refill - ENG Drain Refill

Remove

1. Drain the coolant.

Coolant Drain - ENG Refill - ENG Drain Refill

2. Remove the EGR module.

EGR Module

3. Remove the intake manifold.

Intake Manifold Remove

4. Disconnect the pipeline (1) from the thermostat housing.
5. Disconnect the pipeline (2) from the oil cooler.

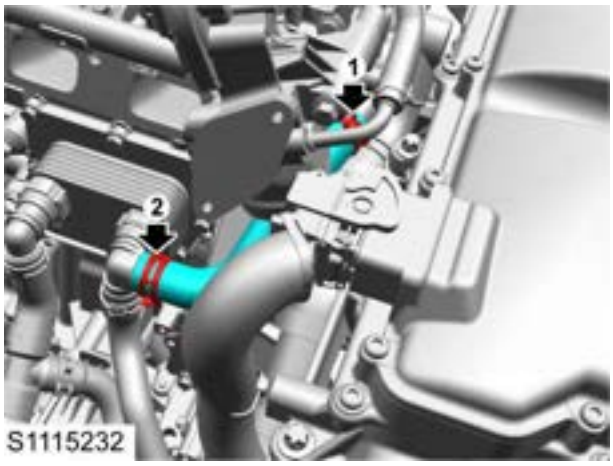

6. Remove the pipeline from the oil cooler to the thermostat housing.

Refit

1. Connect the pipeline to the oil cooler.
2. Connect the pipeline to the thermostat housing.
3. Fit the intake manifold.

Intake Manifold Refit - GS62

4. Fit the EGR module.

EGR Module

5. Refill the coolant.

Coolant Drain - ENG Refill - ENG Drain Refill

Remove

1. Drain the coolant.

☞Coolant Drain - ENG Refill - ENG Drain Refill

2. Remove the manual service disconnect.

☞Manual Service Disconnect (MSD) Remove

3. Disconnect the pipeline assembly.

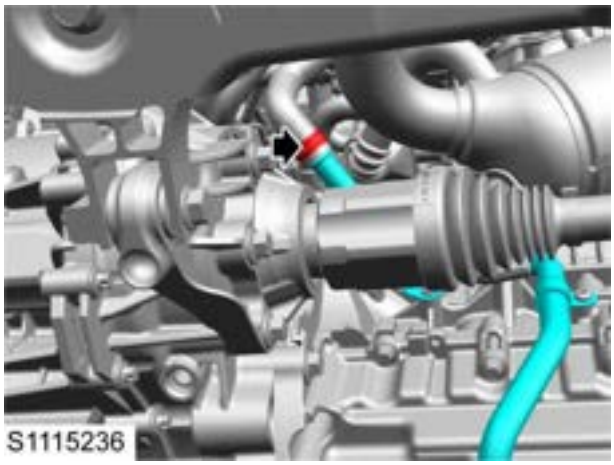

4. Disconnect the electronic water pump.

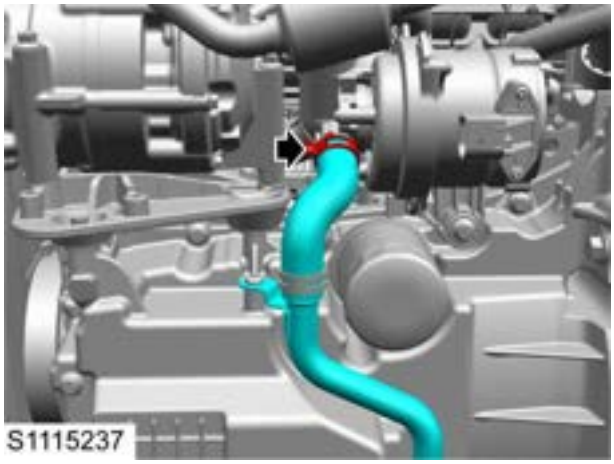

5. Remove 4 bolts fixing the pipeline assembly to the engine.

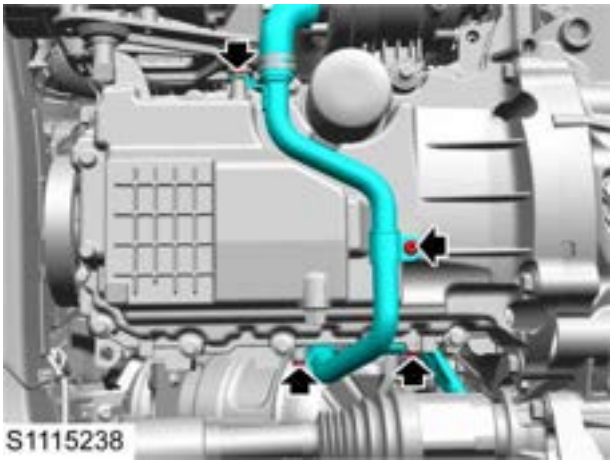

6. Remove the pipeline assembly - heater water outlet pipe to water pump.

Refit

1. Fit 4 bolts fixing the pipeline assembly to the engine, tighten them to 8-12Nm, and check the torque.
2. Connect the electric water pump.
3. Connect the pipeline assembly.
4. Fit the manual service disconnect.

☞Manual Service Disconnect (MSD) Refit

5. Refill the coolant.

☞Coolant Drain - ENG Refill - ENG Drain Refill

Remove

1. Drain the coolant.

☞ Coolant Drain - ENG Refill - ENG Drain Refill

2. Remove the intake manifold.

☞ Intake Manifold Remove

3. Disconnect the oil cooler (1).
4. Disconnect the transmission oil cooler pipe from the 3-way valve (2).
5. Disconnect the water pump (3).

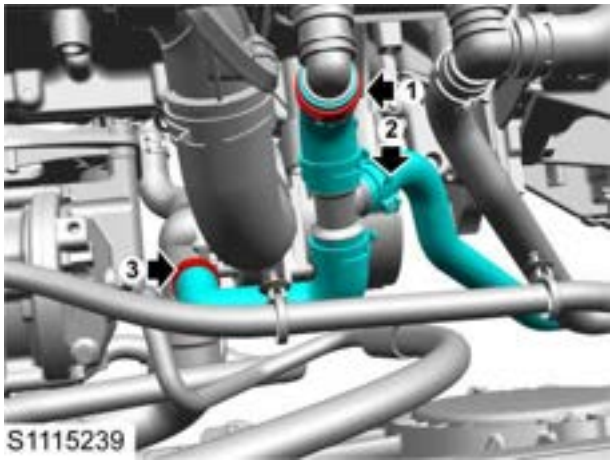

6. Remove the oil cooler to water pump pipeline.

Refit

1. Connect the water pump.
2. Connect the transmission oil cooler and 3-way valve.
3. Connect the oil cooler.
4. Fit the intake manifold.

☞ Intake Manifold Refit - GS62

5. Refill the coolant.

☞ Coolant Drain - ENG Refill - ENG Drain Refill

Remove

1. Drain the coolant.

☞Coolant Drain - ENG Refill - ENG Drain Refill

2. Remove the manual service disconnect.

☞Manual Service Disconnect (MSD) Remove

3. Disconnect the negative battery cable.
4. Disconnect the harness (1) from the water pump.
5. Disconnect all pipelines (2) from the water pump.

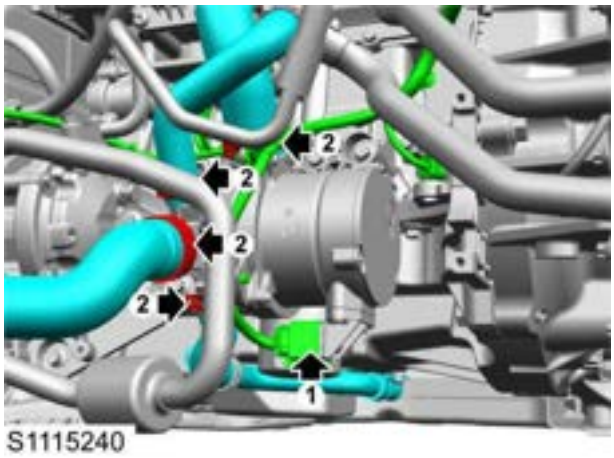

S1115240

6. Remove 3 bolts fixing the water pump to the engine.

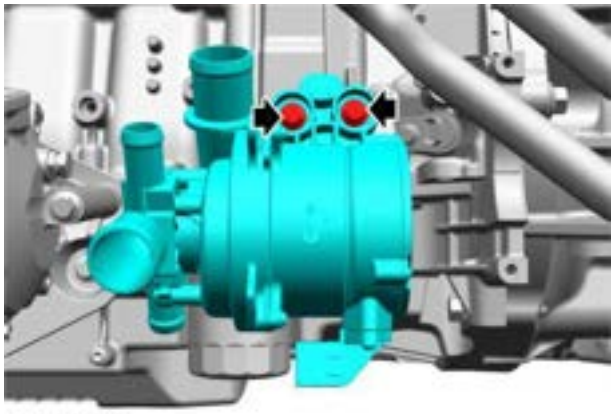
S1115241

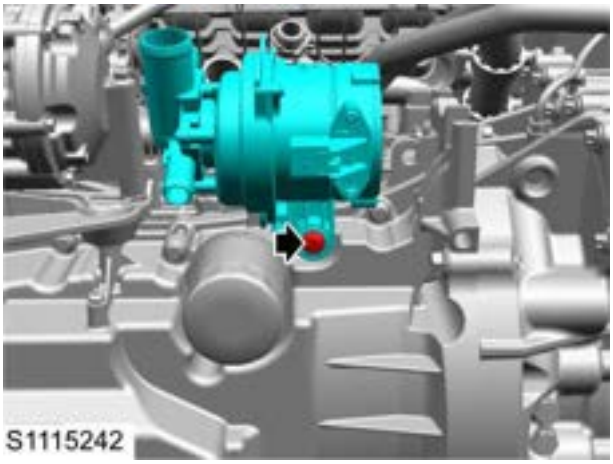
S1115242

7. Remove the engine water pump.

Refit

1. Fit 3 bolts fixing the water pump to the engine, tighten them to **22-28Nm** , and check the torque.
2. Connect all the pipelines to the water pump.
3. Connect the harness to the water pump.
4. Connect the negative battery cable.
5. Fit the manual service disconnect.

☞Manual Service Disconnect (MSD) Refit

6. Refill the coolant.

☞Coolant Drain - ENG Refill - ENG Drain Refill

Cylinder Head Check

Valve Check

1. Remove the carbon deposits, oil and varnish from the valve. Clean all carbon deposits on the valve head with a soft wire brush. Varnish can be removed by immersion in the part immersion solvent or equivalent.

Tip：DO NOT use a wire brush on any part of the valve stem.

Tip：DO NOT grind or condition the intake valve.If the intake valve is out of specification, replace the valve.

2. Clean the valve guide.
3. Check the valve stem for any wear (4).
4. Check the valve lock notch for any damage or wear (5). If the valve is damaged or worn, replace it.
5. Check whether the valve cone is burnt or cracked (1). If the parts are damaged, check the corresponding piston and cylinder head area for any damage.
6. Check the valve stem for burrs or scratches. Burrs and minor scratches can be removed with oilstone.
7. Check the straightness of the valve stem and whether the valve cover is bent or deformed with a V-block (3). Bent or deformed valves must be replaced.
8. Remove the deposits from the valve cone. Check the valve cone for any scars.
9. If there are any scars on the cone, replace the valve. The valve cone cannot be machined. If the valve is worn or damaged, it must be replaced.
10. If the valve head outer diameter and chamfer (2) are worn or exceed the specified value, replace the valve.
11. The valve can be lightly stacked on the valve seat.
12. If the valve stem end (6) is worn, replace the valve.
13. If there is no obvious wear, pitting, scratch or deformation, perform valve measurement and reconditioning procedures to verify the valve specifications.

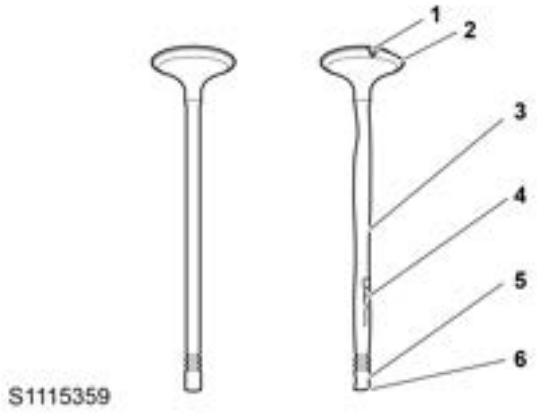

Valve Guide Measurement

1. Measure the clearance between the valve stem (1) and the valve guide (2). Excessive clearance between the valve stem and the valve guide may cause excessive oil consumption and may cause valve fracture. Insufficient clearance will cause noise and stuck valve, and will affect the normal operation of the engine assembly.

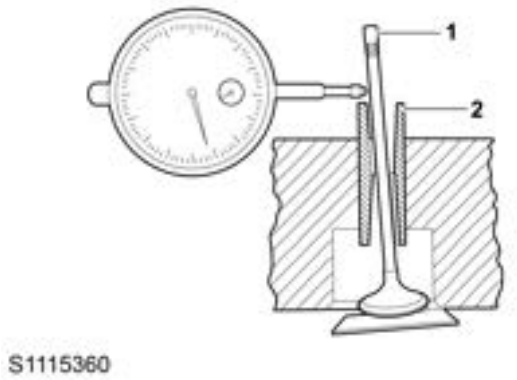

2. Position the dial indicator, so that the dial indicator rod moves directly when the valve stem moves laterally (in a direction crossing the cylinder head), The dial indicator rod must contact the valve stem side slightly above the valve guide.
3. Gently apply pressure when moving the valve stem longitudinally to obtain a clearance reading, and then compare it with the standard value.
4. If the valve clearance is greater than the specified value and a new valve stem with standard diameter also fails to maintain the clearance within the specified range, it is necessary to replace the cylinder head.

Valve Spring Cleaning and Check

1. Clean the valve spring with solvent.
2. Dry the valve spring with compressed air.

Warning：Refer to "Warning of goggles"

3. Check the valve spring for any ruptured spring coil or spring ring end.
4. Measure the valve spring tension with a blenometer.

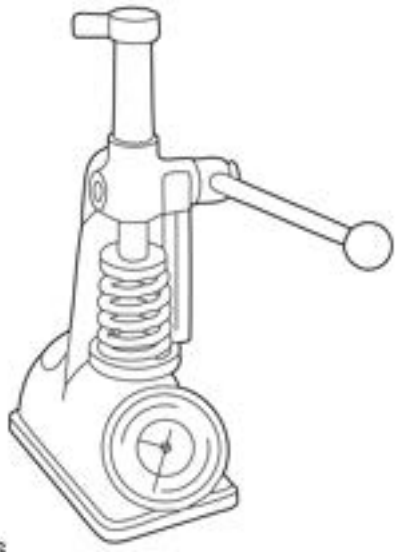

S1113266

5. If the valve spring load is found to be too low, replace the valve spring. Do not increase the spring load by gaskets. If the gaskets are used, the valve spring may be compressed to the extreme before the camshaft cam reaches the top of lift.

Valve Rocker Arm Cleaning and Check

1. Check the rocker arm roller (1) for the following conditions:

- Worn point
- Excessive scratch
- Ensure the roller can rotate freely.

2. Check the connection part (2) at the rocker arm valve stem end.
3. Check the connection part (3) of the rocker arm tappet.

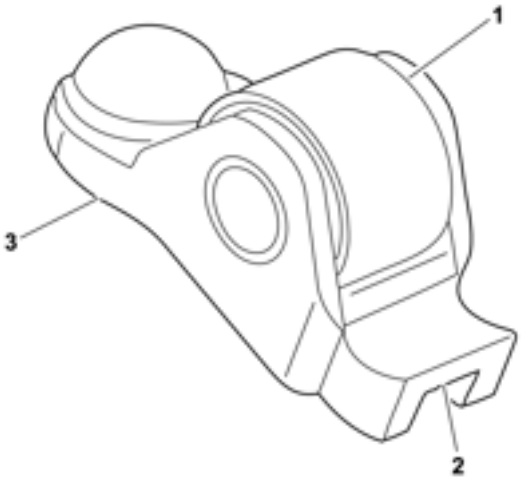

S1113267

4. If necessary, replace the rocker arm.

Cylinder Head and Gasket Surfaces Cleaning and Check

1. Check the cylinder head gasket and joint surface for any leaks, corrosion, or blow-by. If the gasket fails, determine the cause according to the following:

1. Improperly fitted
2. Loose or warped cylinder head
3. The locating pin is missing, not in place, or not fully seated.
4. Corrosion in sealing areas around coolant passages
5. Chips or debris in cylinder head bolt holes
6. Cylinder block bolt holes are not drilled or tapped to sufficient depth.

2. Check the cylinder head gasket surface.

- If there is corrosion only outside 4mm area around each combustion chamber, the cylinder head can be reused.
- If the area between the valve seats is cracked, replace the cylinder head.
- If there is corrosion within 4mm area around each combustion chamber, replace the cylinder head.

3. Clean the cylinder head. Remove all varnish, soot and carbon deposits from exposed metal surfaces.

Tip：DO NOT use a wire brush on any gasket sealing surface.

4. Check the injector hole and clean the injector hole if necessary.
5. Clean the valve guide.
6. Clean the threaded hole with a nylon bristle brush.
7. Remove the residual sealant from the threaded holes.
8. Check the cylinder head for any thread damage or cylinder head stretch or damage.
9. Check all threaded holes for any damage. Threads can be repaired with thread inserts.
10. Replace all suspected bolts.
11. Clean all cylinder head surfaces with the non-corrosive solvent.
12. Blow dry all fuel return holes with compressed air.
13. Use a nylon bristle brush to remove all carbon deposits in the combustion chamber.
14. Check the cylinder head for any cracks. Check the area between the valve seats and in the exhaust port.
15. Check the top surface of the cylinder head for corrosion or blow-by hole.

Tip：DO NOT attempt to weld the cylinder head, replace it.

16. Check the sealing surface.
17. Check the cylinder head plug and make sure the fuel hole is clean and free of debris.

Cylinder Head Top Surface Cleaning and Check

1. Place the ruler diagonally on the top surface of the cylinder head.

2. Check whether the top surface of the cylinder head is flat. If the cylinder head exceeds the specifications, replace the cylinder head. Do not machine the cylinder head.

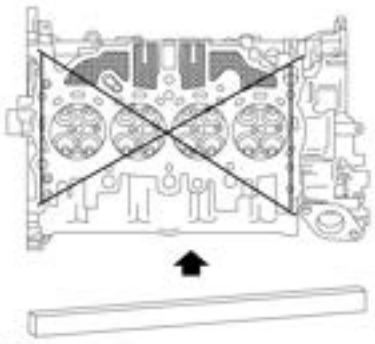

S1113728

3. Ensure that the top surface of the cylinder head is clean and free of gasket materials.
4. Check the surface for any defects or scratches that may prevent the cylinder head gasket from sealing properly.

Camshaft Check

1. Clean the camshaft with solvent.
2. Check all oil holes of the camshaft for any dust, debris or blockage.
3. Check the threaded hole (1) for any damage.
4. Check the camshaft position actuator locating groove (2) for any damage or wear.
5. Check the camshaft thrust surface (3) for any damage.
6. Check the camshaft lobes (4) and journals (5) for any of the following conditions:

- Excessive scratches or pitting
- Discoloration due to overheating
- Deformation due to excessive wear (especially the camshaft lobes)

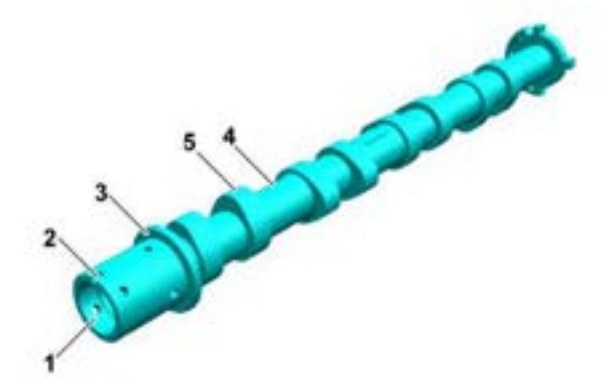

S1115346

If the camshaft has any of the above conditions, replace the camshaft.

Camshaft Measurement

1. Place the camshaft on a suitable fixing support to measure the camshaft for wear.

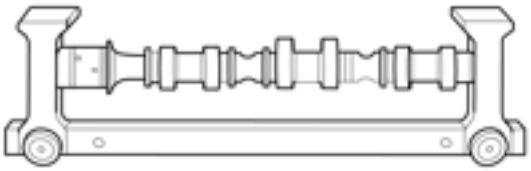

S1113731

2. Measure the diameter and out-of-roundness of the camshaft journal with an outside micrometer.

- If the diameter is less than the specified value, replace the camshaft.
- If the out-of-roundness exceeds the specified value, replace the camshaft.

3. Measure the camshaft runout with a runout gauge.

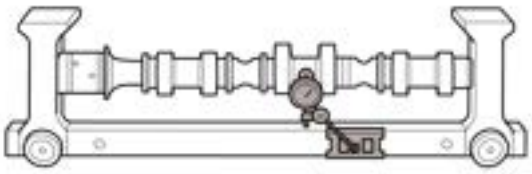

S1113732

4. Measure the surface of the camshaft thrust wall for runout with a runout gauge.

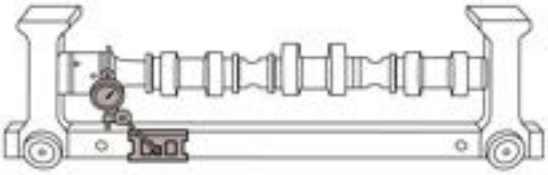

S1113734

5. Measure the camshaft chamfer for wear with a runout gauge.

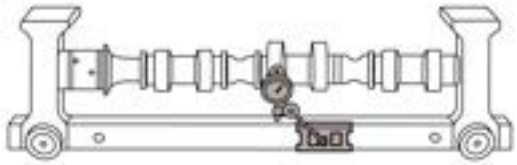

S1113735

6. If the camshaft damage or wear degree exceeds the specified value, replace the camshaft. Machining operation on the camshaft is not allowed.

Camshaft Journal Clearance

1. Fit the camshaft bearing cap to the camshaft cover.
2. Fit and tighten the camshaft cover bolts.
3. Measure the camshaft bearing bore diameter with the inner diameter micrometer.
4. Subtract the camshaft journal from the camshaft bearing bore diameter to obtain the running clearance.

If the running clearance exceeds the specification and the camshaft journal is within the specified range, replace the camshaft cover.

5. After the measurement, remove the camshaft bearing cap.

Camshaft Journal Positioning

1. Make sure the camshaft is serviceable.
2. Check the camshaft cover and the camshaft bearing surface for any defects or scratches that may hinder the correct fit clearance of the camshaft. Repair any minor defects or scratches.
3. Fit the camshaft to the camshaft cover.
4. Fit the camshaft bearing cap.
5. Fit and tighten the camshaft cover bolts.
6. Ensure that the camshaft can run freely in the camshaft cover. If the camshaft cannot run freely, replace the camshaft cover.

Overview of Valve Measurement and Reconditioning

1. Correct valve maintenance is crucial to the performance of the engine. Therefore, the measurement procedures must be strictly and carefully followed in order to identify components that exceed the specifications.
2. If the measurement procedure shows that the valve or valve seat must be reconditioned, it is essential to perform the measurement procedure after reconditioning.

Measurement Procedure for Valve Seat Width

1. Measure the width of the valve seat in the cylinder head with a suitable gauge.

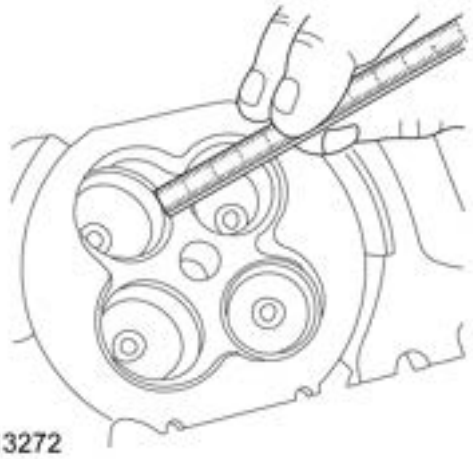

S1113272

2. Measure the length of valve with a vernier scale.

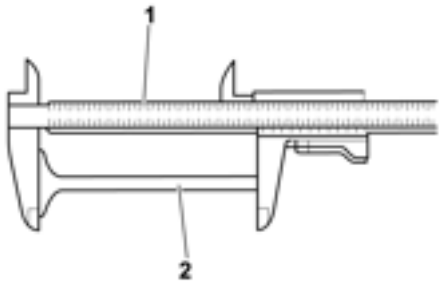

S1113737

3. Measure the valve stem diameter with a micrometer. Refer to "Engine Mechanical System - Specifications - Parameters".

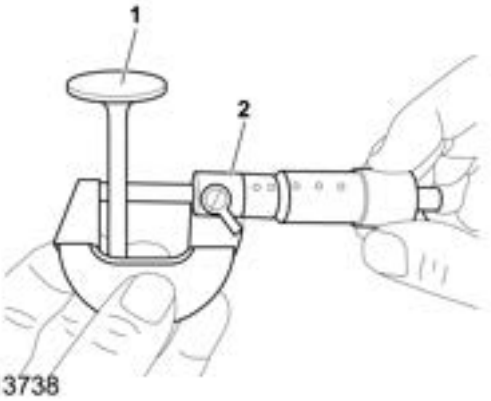

S1113738

4. Measure the width of the valve cone (1) with a suitable gauge.

Tip：The distance between the valve seat contact surface to valve external diameter -excess(a)- shall be at least 0.5mm（0.020in）.If thevalve seat contact surface is close to the excess, adjust the valve seat to make the contact surface away from the excess.

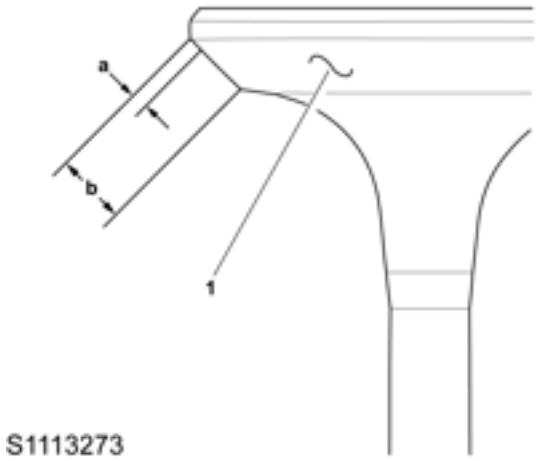

5. If the valve seat width is unqualified, the valve and the valve seat must be ground to make its width conform to the specifications. The correct valve seat width is very important to provide the correct valve heat dissipation.

Measurement Procedures for Valve Head Outer Diameter and Chamfer

1. Measure the valve head outer diameter and chamfer (a) with a proper scale.

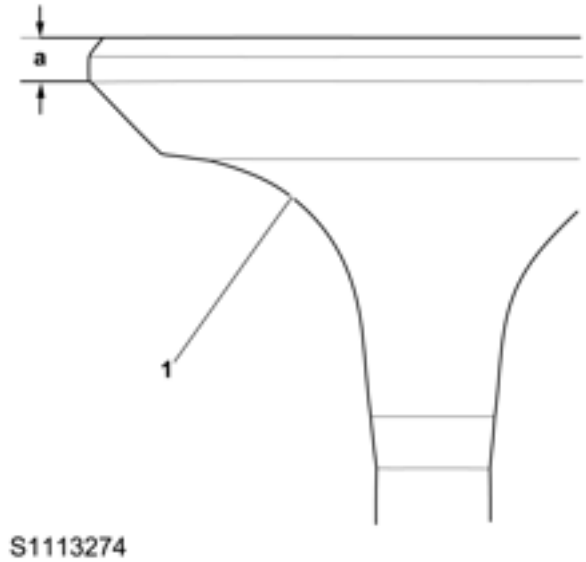

2. If the valve head outer diameter and chamfer meet the specifications, test the valve seat concentricity of the valve (1) according to the valve-to-valve seat concentricity measurement procedure. After the concentricity measurement, if the valve seat is reconditioned, recheck the valve head outer diameter and chamfer.

Measurement Procedure for Valve-to-Valve Seat Concentricity

Tip :

- ***Check the coaxiality of the valve and valve seat to confirm the normal sealing of the valve and valve seat.***
- ***The valve conical surface and valve seat must be measured to ensure the normal sealing of the valve.***

1. Gently apply the blue dye (1) to the valve cone (3).
2. Fit the valve into the cylinder head.
3. Turn the valve against the valve seat with sufficient pressure to grind away the dye.
4. Remove the valve from the cylinder head.
5. Check the valve cone.

- If the valve cone and the valve stem are concentric to provide the correct sealing, the impression around the entire cone (2) will be continuous.

Caution : The distance from the dye mark to the valve outer diameter - allowance (a) - must be at least 0.5 mm. If the dye-worn impression is too close to the allowance, the valve seat must be reconditioned so that the contact surface is away from the allowance.

Caution : Never grind or adjust the intake valve. If the intake valve exceeds the specification, replace it with correct intake valve.

- If the valve taper surface and valve stem are not concentric, discontinuous remove trace of the valve taper surface colorant will appear. The valve should be refinished or replaced, and the valve seat must be reconditioned according to the reconditioning procedure for the valve and valve seat.

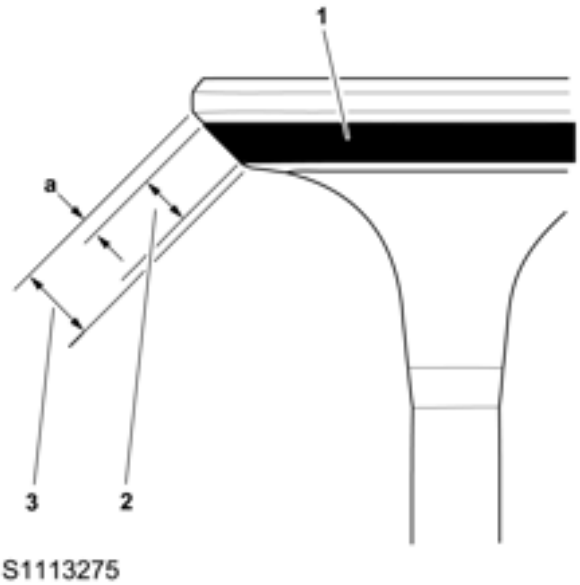

Reconditioning Procedure for Valve and Valve Seat

Tip：

- ***If the width, roundness or coaxiality of the valve seat exceed the specified value, grind the valve seat to ensure enough radiating heat to prevent the carbon deposit on the seat.***
- ***If the valve seat needs to be adjusted, the valve surface shall be adjusted unless new valve is used.***

1. Grind the valve seat surface (a) till it meets the specified value of valve taper angle (2).
2. Grind the valve relieving face till it meets the specified value of valve taper angle (1) and enables the valve seat surface (a) to be correctly positioned on the valve.
3. Grind the bottom section of the valve till it meets the specified value of valve taper angle (3), and reduce the width (a) of the valve seat so that it meets the specified value.

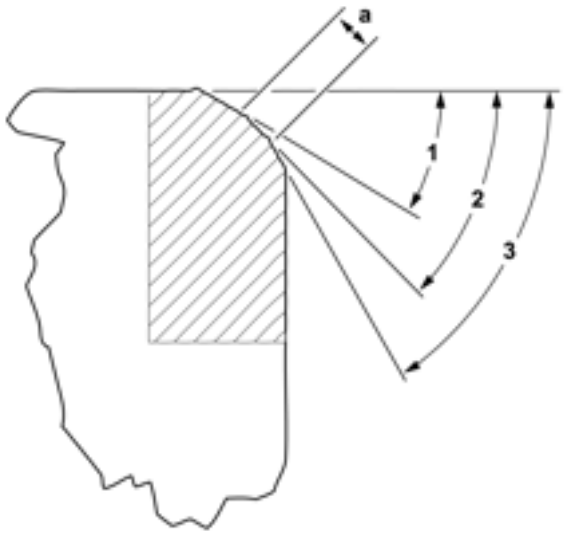

S1113276

4. If the specified value is exceeded, replace the intake valve.

Caution：Never grind or adjust the intake valve. If the intake valve exceeds the specification, replace it with correct intake valve.

5. If the exhaust valve being used is the original one, grind the valve to reach the specified value. After grinding, measure the outer diameter and chamfer of the valve head again according to the measurement procedure for outer diameter and chamfer of valve head. If it is out of the specification, replace the exhaust valve. New valves do not require grinding.
6. When grinding the valve and valve seat, the material should be ground as little as possible. Grinding the valve seat will result in a decrease in valve spring pressure.
7. Fit the valve into the cylinder head.

- If an exhaust valve with finished surface is used, grind the valve into the valve seat with fine abrasives. Reconditioning of valves and valve seats shall ensure the smooth surfaces after reconditioning and correct assembly, so only minimal grinding is required. Excessive grinding will cause grooves on the valve cone and it cannot be well positioned at high temperature.
- Prior to final assembly, clean the valve and valve seat with solvent and compressed air to ensure the valve and valve seat are clean.

8. After the valve seat in the cylinder head reaches the correct width, the valve stem height must be re-measured according to the valve stem height measurement procedure.
9. If the valve stem height is acceptable, test the valve seat concentricity according to the valve-to-valve seat concentricity measurement procedure.

Measurement Procedure for Valve Stem Height

Tip：Measure the distance between the valve spring seat and the valve spring seat to confirm the height of the valve lever.

1. Insert the valve (1) into the valve guide of the cylinder head (2).

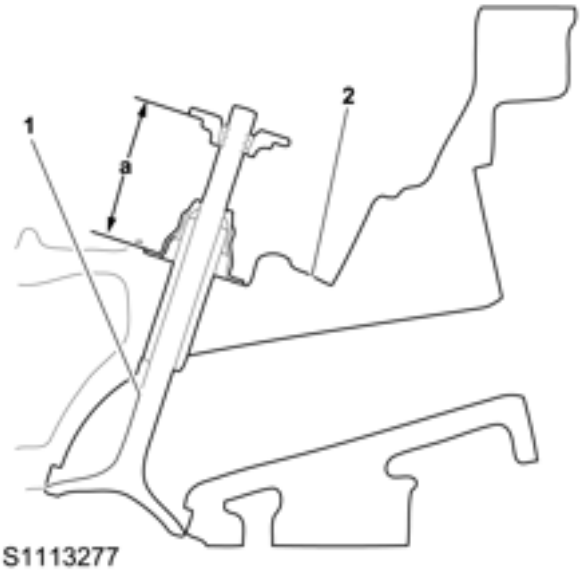

S1113277

2. Ensure that the valve is seated on the valve seat of the cylinder head.
3. Fit the valve stem oil seal.
4. Fit the valve spring seat and valve stem lock plate.
5. Measure the distance (a) from the valve seal lip to the bottom of the spring seat.
6. If the specified maximum height is exceeded, fit a new valve and re-measure the valve stem height.

Caution：Never grind the end of the valve lever.The end of the valve lever is hardened. The hardened surface will

be eliminated by grinding, then causing early wearing and damage to the engine.

7. If the height of the valve stem remains above the maximum value, the cylinder head must be replaced.

Caution：Never use the gasket to adjust the height of the valve lever.If gasket is used to compress the valve spring to the bottom before the cam salient reaches the max lift, the engine may be damaged.

Piston Connecting Rod Check

Piston Check

1. Clean the piston skirt and piston pin with the cleaner. Do not clean any part of the piston with wire brush.
2. Clean the piston ring groove with the ring groove cleaning tool to ensure that the oil ring hole and groove are clean.
3. Blow dry the piston with compressed air.

Warning : Wear the goggles when using the compressed air to avoid the damage to the eyes due to splashing dust and particles.

4. Check the piston for any of the following conditions:

- Any crack in the piston ring groove, piston skirt or piston pin seat
- Nicks and burrs that may cause blockage of the piston ring groove
- The piston ring groove is bent or worn
- Any burr in the groove of piston pin retainer ring
- Any corrosion on the top of piston.
- The piston skirt coating is worn or damaged
- The piston pin hole or piston pin is worn or not

5. Replace pistons with any signs of damage or excessive wear.

Piston Measurement

1. Measure the piston width according to the following procedure:

1. Measure the width of the piston at a point 38mm below the top of the piston (1) with an outside micrometer (2) at the thrust surface perpendicular to the piston pin centreline.
2. Deduct the piston width from the cylinder diameter to obtain the fit clearance, and compare the results with the specified values of piston width and fit clearance.
3. If the measured clearance is greater than the specified value provided and the cylinder bore is within the specified value, replace the piston.

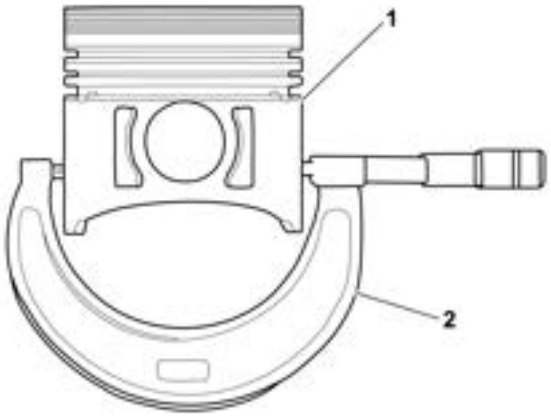

S1113245

2. Measure the clearance from piston pin hole to piston pin according to the following procedures:

1. The piston pin hole and piston pin must be free of any varnish or wear.
2. Measure the piston pin in the piston contact area with an outside micrometer.
3. Measure the piston pin hole with an inside micrometer.
4. Subtract the piston pin diameter from the piston pin hole diameter to obtain the clearance between piston pin hole and piston pin.

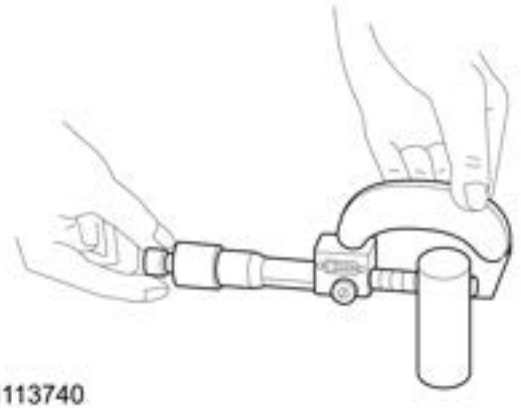

S1113740

3. Compare the results with the specified values of piston pin diameter and clearance between piston pin and piston pin bore.
4. If the clearance is too large, determine the components that exceed the specifications and replace them as necessary.
5. If any size of the piston exceeds the specification, it must be replaced.
6. If the new piston fails to meet the clearance specification, the cylinder block assembly should be replaced.

Piston Ring Measurement

1. Measure the piston ring end clearance according to the following procedure:

1. Place the piston ring in the cylinder bore about 25mm from the top surface of the cylinder block. Locate the piston ring with the piston head, and ensure that the piston ring is perpendicular to the cylinder bore.
2. Measure the piston ring end clearance with a feeler gauge (1). Compare the measured value with the specified value.
3. If the clearance exceeds the specifications, the piston ring must be replaced.
4. Repeat this procedure for all piston rings.

S1113119

2. Measure the piston ring side clearance according to the following procedures:

1. Rotate the entire piston ring (2) around the piston ring groove. If the piston ring is stuck due to deformation, replace the piston ring.
2. Place the piston ring on the piston and measure the clearance with a feeler gauge (1) at several positions.
3. Compare the measured value with the specified value of piston ring side clearance.
4. If the clearance is greater than the specified value, replace the piston ring.

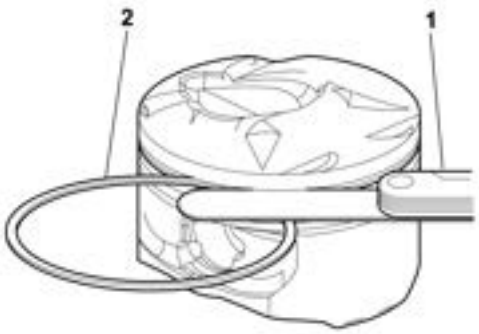

S1113120

3. When fitting the compression ring, there is a locating notch near the end for identifying the top surface so that the notch is upward.
4. If the new piston ring cannot reduce the clearance to the appropriate specified value, fit a new piston.
5. If the new piston fails to meet the clearance specification, the cylinder block assembly should be replaced.

Connecting Rod Check

1. Clean the connecting rod with solvent and blow dry with compressed air.

Warning：Wear the goggles when using the compressed air to avoid the damage to the eyes due to splashing dust and particles.

2. Remove the connecting rod cap and clean the threads (3).
3. Remove and discard the connecting rod bearing, and do not reuse the connecting rod bearing used when running the engine.
4. Check the piston pin bush (4) for any scratches or damage.
5. Check the beam (1) of connecting rod for bend or deformation.
6. Check the connecting rod cap (2) for any nicks or damage caused by any potential factors.

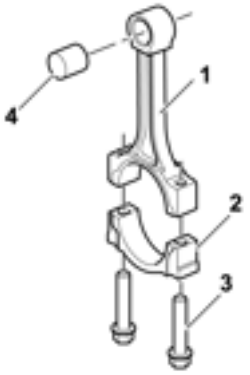

S1113741

7. Check the seat surface of the connecting rod bearing for any scratches or wear.
8. If the connecting rod hole has slight scratches or wear, clean the connecting rod hole in a circular direction with sandpaper.

Caution：DO NOT scratch the connecting rod or its cap

Connecting Rod Measurement

1. Measure the clearance between the piston pin and the connecting rod hole according to the following procedure:

Caution：All measurement should be done under a normal temperature.

1) At the position where the piston pin contacts the connecting rod, measure the diameter of the piston pin twice with an outside micrometer.

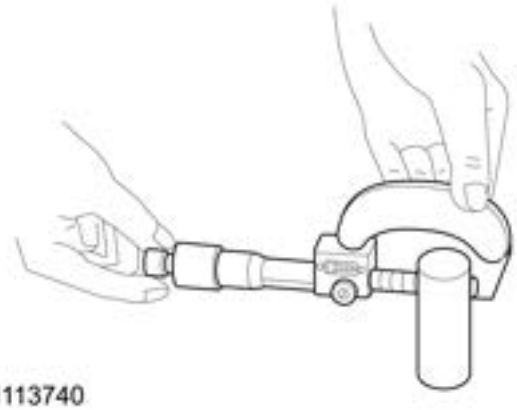

S1113740

2) Measure the piston pin hole diameter of connecting rod with an inside micrometer.

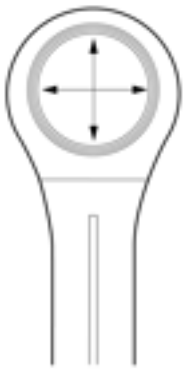

S1113742

3) Subtract the diameter of the piston pin from the piston pin hole diameter of the connecting rod to obtain the clearance between the piston pin and the connecting rod hole.

2. Compare the clearance measured with the specified value.
3. If the clearance is excessive, replace the piston pin.
4. If the clearance is still too large, replace the connecting rod.
5. Measure the inner diameter of the connecting rod crankshaft bearing bore with an inside micrometer.
6. Compare the measured value of the bearing bore diameter with the specified value.
7. If the bearing bore exceeds the specification, replace the connecting rod and do not trim it.

Cylinder Block Check
Cylinder Block Check

1. Remove any old thread sealant, gasket material or sealant.
2. Clean all of the following areas with solvent:

- Sealing surface
- Cooling passage
- Oil passage
- Bearing journal

3. Clean all threaded and through holes with solvent.
4. Dry the engine cylinder block with compressed air.

Warning : Wear the goggles when using the compressed air to avoid the damage to the eyes due to splashing dust and particles.

5. Check the crankshaft journal for any damage or eccentricity. The crankshaft journal is not repairable. If the crankshaft journal is damaged, the cylinder block assembly must be replaced.
6. Check all sealing and engaging surfaces for any damage, and repair or replace the cylinder block assembly if necessary.
7. Check all threaded holes and through holes for any damage or excessive debris.
8. Check all bolts for any damage. If any damage, it must be replaced with a new one.
9. Check the cylinder wall for any cracks or damage, and the cylinder liner is not repairable. If the cylinder liner is damaged, the cylinder block assembly must be replaced.
10. Check the engine cylinder block for any cracks, which shall be not repaired. If any cracks are found, the cylinder block assembly must be replaced.

Cylinder Diameter Measurement

1. Measure the dimension of 37mm below the surface of the cylinder head gasket, and measure the cylinder bore.

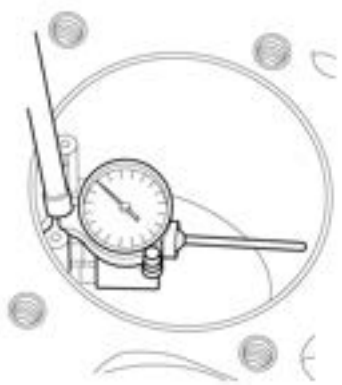

S1113743

2. Put the dial to zero at the spot to be tested of the cylinder by setting a bore diameter gauge (1), and measure the cylinder bore diameter. Before removing the cylinder bore gauge from the cylinder, lock the dial in the zero position. Set the zero position of cylinder bore gauge to the same zero position when it is removed from the cylinder, and measure the span of the cylinder bore gauge contact point with an outside micrometer.

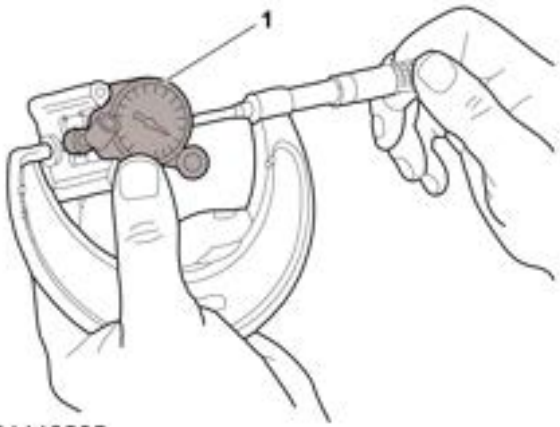

S1113205

3. The tiny vertical scratches caused by the ring end will not cause excessive oil consumption. Do not hone the cylinder to remove these scratches.
4. Compare the measurements with the specified value.
5. If the cylinder bore exceeds the specified value, replace the cylinder block assembly.

Cylinder Bore Taper Measurement

1. Measure the cylinder bore along the thrust surface perpendicular to the crankshaft centerline 10mm below the top surface, and record the measured value (1).
2. Measure the cylinder bore along the thrust surface perpendicular to the crankshaft centerline 100mm below the top surface, and record the measured value (2).

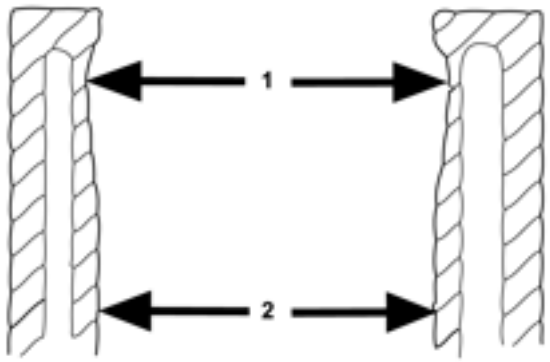

S1113204

3. Calculate the difference between the two measured values, and the result is the cylinder bore taper.
4. If the cylinder exceeds the specifications, replace the

cylinder block assembly.

Cylinder Bore Out-of-Roundness Measurement

1. Measure both thrust and non-thrust cylinder bores 10mm below the top surface and record the measured values.
2. Calculate the difference between the two measured values, and the result indicates the out-of-roundness of the upper end of the cylinder.
3. Measure both thrust and non-thrust cylinder bores 100mm below the top surface and record the measured values.
4. Calculate the difference between the two measured values, and the result indicates the out-of-roundness of the lower end of the cylinder.

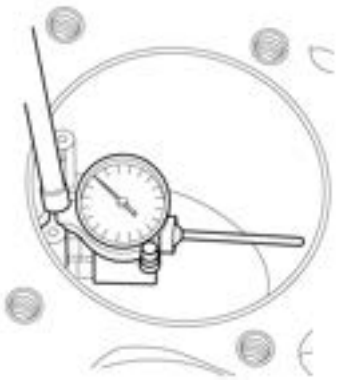

S1113743

5. If the cylinder exceeds the specifications, replace the cylinder block assembly.

Top Surface Flatness Check

1. Ensure that the top surface of the engine cylinder block is clean and free of gasket materials.
2. Check the surface for any defects or scratches that may prevent the cylinder head gasket from sealing properly.
3. Place the ruler diagonally on the top surface of the cylinder block.
4. Use a clearance gauge to measure the clearance between the ruler and the top surface of the cylinder block at 4 points along the ruler.

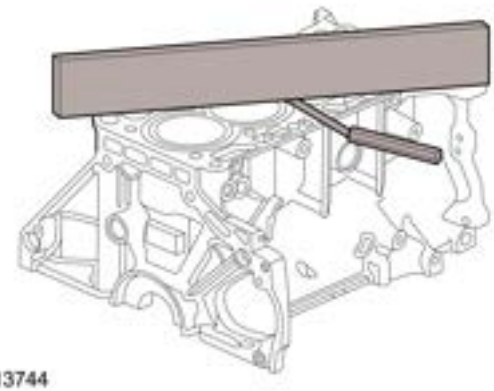

S1113744

5. If the top surface of the cylinder block requires a removable amount of more than 0.25mm, the cylinder block must be replaced.

Crankshaft Check

Tip : Use care when handling the crankshaft.Avoid damage to the bearing surfaces or the lobes of the crankshaft position reluctor ring.Damage to the teeth of the crankshaft position reluctor ring may affect on-board diagnostic (OBD) II system performance.

1. Clean the crankshaft with solvent.
2. Thoroughly clean all oil passages and check for any blockage or burrs.
3. Blow dry the crankshaft with compressed air.

Warning : Wear the goggles when using the compressed air to avoid the damage to the eyes due to splashing dust and particles.

4. Visually check the crankshaft for damage.
5. Check the crankshaft journal for any pitting or embedding of bearing material.
6. Check the crankshaft main journal for any grooves or scratches.
7. Check the connecting rod journal for any scratches or wear.
8. Check the crankshaft journal for any wear. The journal shall be smooth and free from any scratch, wear or damage.

Crankshaft Measurement

1. Measure the roundness of the crankshaft journal.

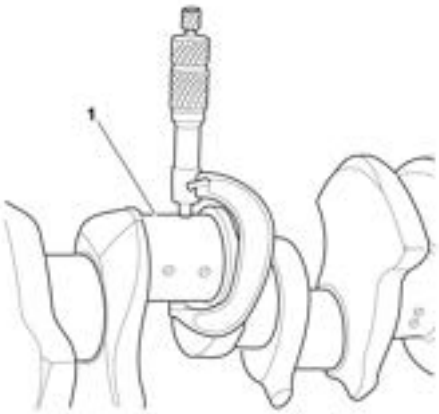

S1113235

2. Measure the crankshaft runout.

1. Use a wooden V-shaped block to support the crankshaft on the front and rear journals.
2. Use the runout indicator (1) or the equivalent tool shown in the Figure to measure the runout on the front and rear intermediate journals of the crankshaft.
3. Use the runout indicator (1) to measure the runout of the crankshaft rear flange.

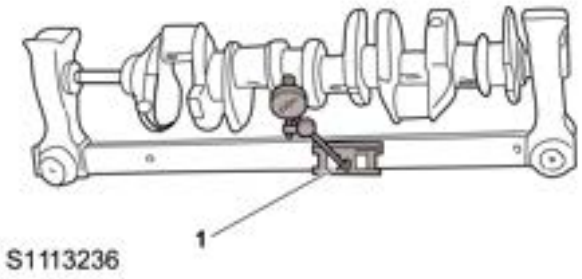

3. If the measured value is not within the specified range, replace the crankshaft.

Crankshaft Bearing Check

1. Check whether the crankshaft bearing has any pits or grooves, or any worn area on the bearing shell, which also indicates fatigue wear.
2. Inspect the crankshaft bearings for excessive scoring or discoloration.
3. Check whether the crankshaft bearing is embedded with dust or debris.
4. Check whether the crankshaft bearing is bright.

- If the lower half of the bearing is worn or damaged, the upper and lower halves should be replaced.
- In general, if the lower part is suitable for use, the upper part should also be suitable for use.

Crankshaft Bearing Selection

Check the crankshaft main bearing bore as per the following procedures.

- Tighten the main bearing bolt torque to the specified angle value with an angle gauge.
- Use the runout meter (1) to measure the taper and roundness in the crankshaft main bearing.
- Taper or roundness shall not appear.

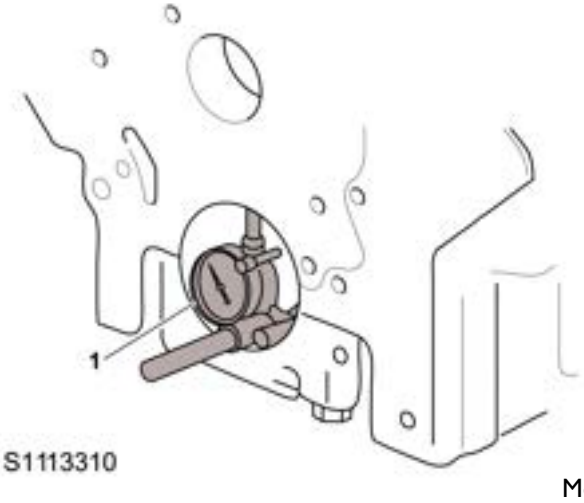

Bearing Selection

Measure the bearing clearance so as to determine a correct size of the bearing to be replaced. There are 2 methods for measuring the bearing clearance. Method A is able to provide more reliable results, so it is the preferred option.

- Bearing clearance can be calculated by measurements based on Method A.
- Method B can directly obtain the bearing clearance, but does not offer any information on bearing runout.

Method A

Tip：DO NOT mix inserts of different nominal size in the same bearing bore.

1. With an angle of 90°, measure the diameter of the crankshaft main journal from more than one point with a micrometer (1), and calculate the average of measured values.
2. Measure the taper and runout of the crankshaft main journal.
3. Fit the bearing and the lower crankcase, and tighten the bearing cap bolt to the specified torque value.
4. With an angle of 90°, measure the inner diameter of the bearing from several points and average the measured values.
5. Determine the clearance by deducting the measured journal value from the measured bearing inner diameter.
6. Compare the clearance value with the standard value to determine whether the clearance is within the specified range. Refer to "Engine Mechanical System - Specifications - Parameters".
7. If it is out of the specified range, select another bearing.
8. Use an inside micrometer to measure the inside diameter of the connecting rod in the same direction along the length of the connecting rod.

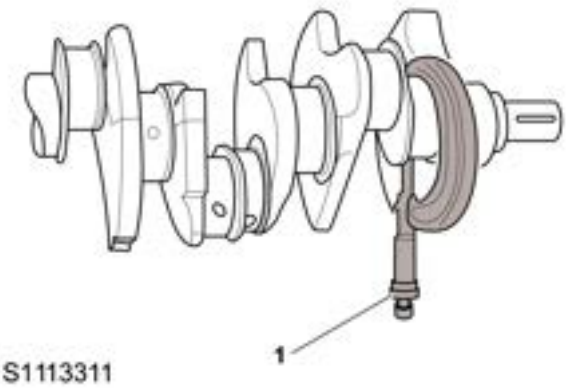

Method B

1. Clean the used bearing.

2. Fit the used bearing.
3. Locate the plastic clearance gauge across the entire width of the bearing.
4. Fit the bearing cap.
5. Fit the bearing cap bolt to the specified value.

Caution：Before connecting the bolt, use copper, lead or leather hammers to knock the crankshaft bearing cover into the cylinder hole, avoiding the damage to the cylinder block or crankshaft bearing cover.Never use the connection bolt to pull the crankshaft bearing cover into the seat.Otherwise, the cylinder block or bearing cover may be damaged.

6. Remove the bearing cap to release the plastic clearance gauge from its original position. Whether the plastic of the gauge is stuck to the journal or bearing cap is not the key point.

Tip：DO NOT rotate the crankshaft.

7. According to the scale mark (1) printed on the plastic clearance gauge component, measure the widest point of the plastic clearance gauge.
8. Remove the plastic clearance gauge.

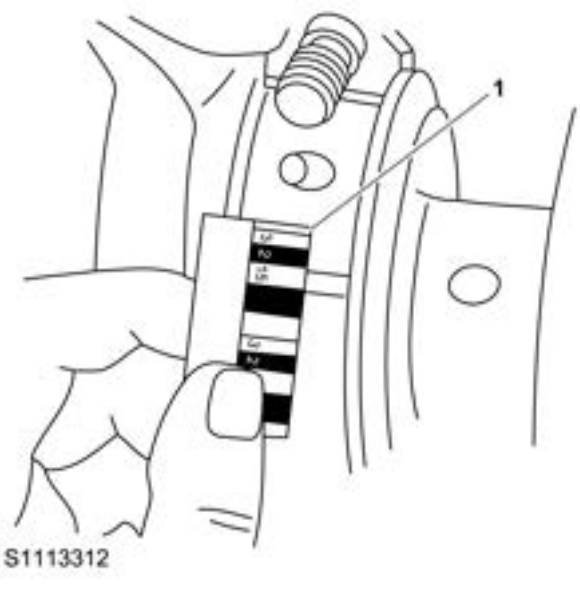

Oil Pressure Check

1. Remove the oil pressure sensor.

☞ **Oil Pressure Sensor**

2. Remove the seal ring from the oil pressure sensor, and fit it to the connector of the oil pressure gauge.
3. Connect the special tools T10001 and TEN00080 , and fit them to the original oil pressure sensor.

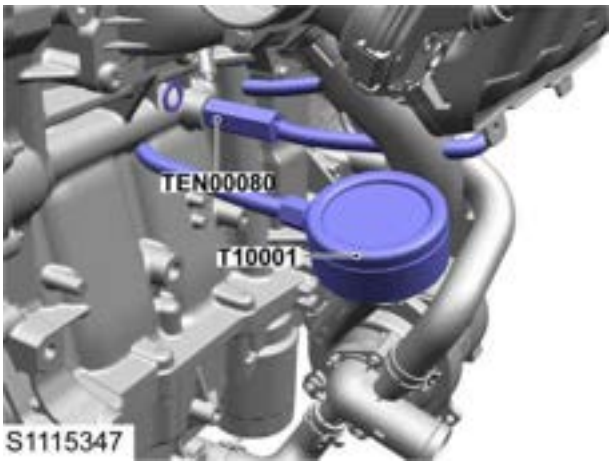

4. Check the engine oil, and refill if necessary.
5. Connect the negative battery cable.
6. Start and run the engine until the oil temperature reaches 85 - 100℃.
7. When the engine idles, the reading of the oil pressure gauge is about 100Kpa-200Kpa.
8. Shut down the engine, and disconnect the negative battery cable.
9. Remove the special tools T10001 and TEN00080 .
10. Wipe off the spilled oil.
11. Fit the oil pressure sensor.

☞ **Oil Pressure Sensor**

Engine Oil Filter

Remove

1. Remove the oil fill cap.
2. Remove the bottom deflector.

☞ **Bottom Deflector Remove**

3. Remove the drain bolt from the oil pan and discard the seal ring.

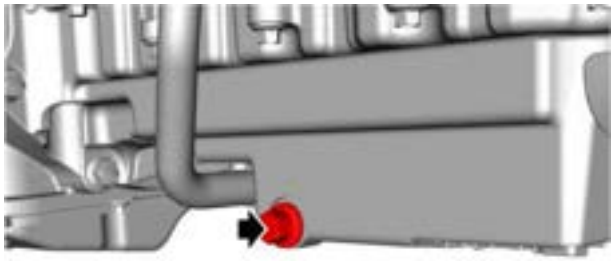

S1114916

4. Remove and discard the oil filter from the oil pan.

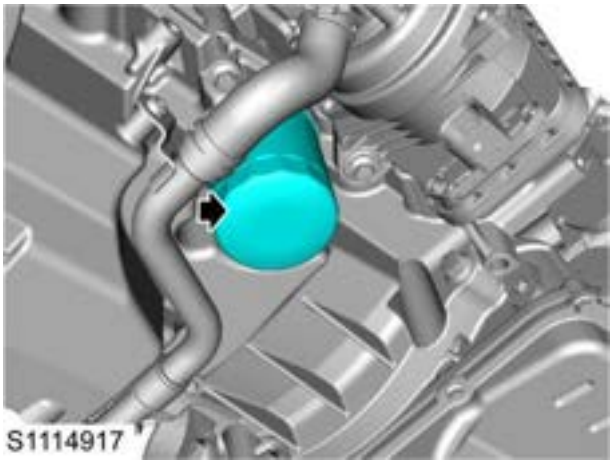

S1114917

Refit

1. Visually check if the oil filter mounting threads are intact, replace the oil filter mounting stud if necessary, tighten it to **36-44Nm** , and check the torque.
2. Fit the oil filter to the oil pan, tighten it to **23-29Nm** , and check the torque.
3. Fit a new seal ring to the drain plug, then fit the drain plug to the oil pan, tighten it to **50-55Nm** , and check the torque.
4. Fit the bottom deflector.

☞ **Bottom Deflector Refit**

5. Refill the engine oil to the specified capacity.
6. Fit the engine oil filler cap.

Remove

1. Remove the resonator assembly.

☞Resonator Assembly

2. Disconnect the pipeline from the oil-gas separator.

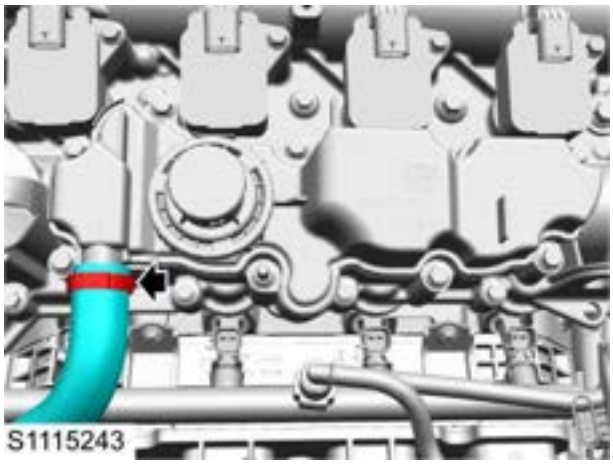

3. Remove 1 stud (1) fixing the oil-gas separator to the engine.
4. Remove 8 bolts (2) fixing the oil-gas separator to the engine.

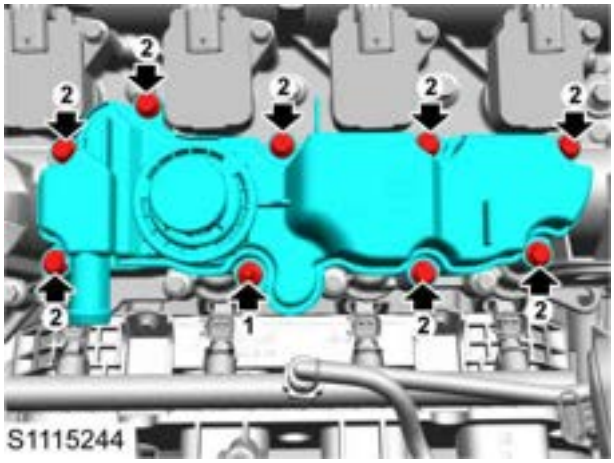

5. Remove the oil-gas separator and discard the seal ring.

Refit

1. Fit a new seal ring.
2. Fit 8 bolts fixing the oil-gas separator to the engine, tighten them to **8-12Nm** , and check the torque.
3. Fit 1 stud fixing the oil-gas separator to the engine, tighten it to **8-12Nm** , and check the torque.
4. Connect the pipeline to the oil-gas separator.
5. Fit the resonator assembly.

☞Resonator Assembly

Remove

1. Remove the resonator assembly.

☞ Resonator Assembly

2. Disconnect the crankcase full load breather hose assembly from the oil-gas separator (1).
3. Disconnect the crankcase full load breather hose assembly from the air filter outlet pipe (2).

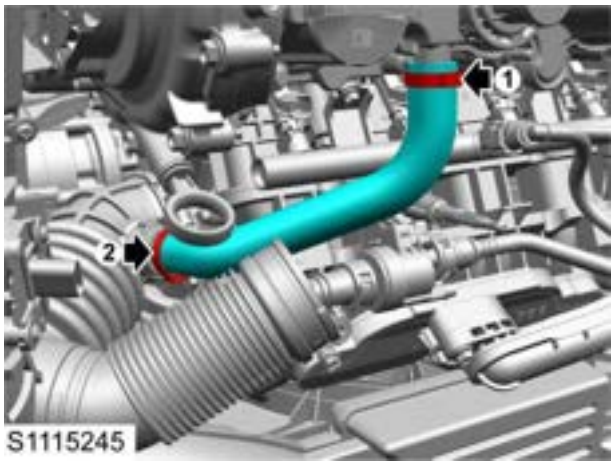

Refit

1. Connect the crankcase full load breather hose assembly to the air filter outlet pipe.
2. Connect the crankcase full load breather hose assembly to the oil-gas separator.
3. Fit the resonator assembly.

☞ Resonator Assembly

Remove

1. Remove the manual service disconnect.

☞ **Manual Service Disconnect (MSD) Remove**

2. Remove the resonator assembly.

☞ **Resonator Assembly**

3. Remove the bottom deflector.

☞ **Bottom Deflector Remove**

4. Disconnect the negative battery cable.
5. Remove 1 nut fixing the engine harness to the front compartment fuse box.

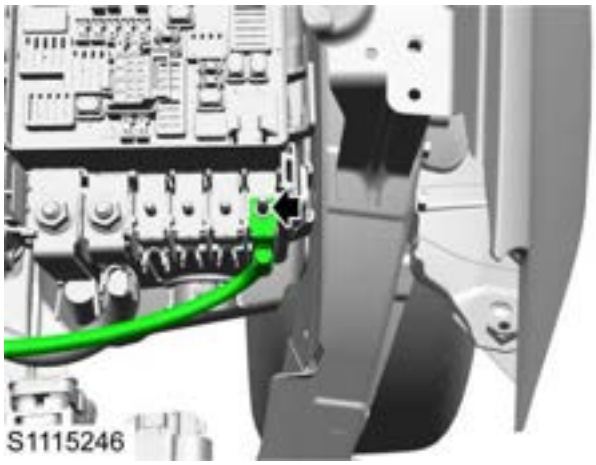

6. Disconnect the engine harness from the engine control module (1).
7. Disconnect the engine harness from the front compartment harness (2).

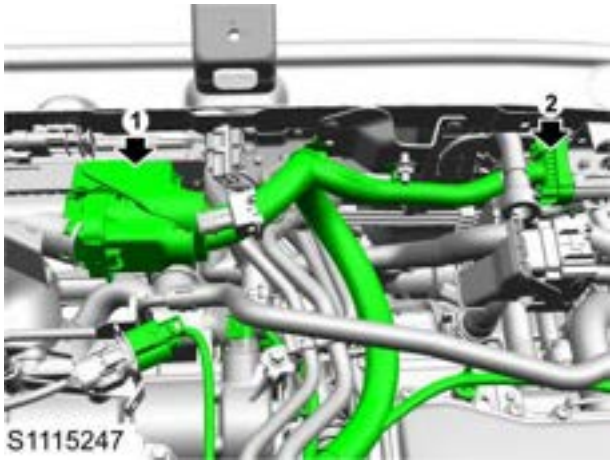

8. Disconnect the engine harness from the front oxygen sensor (1).
9. Disconnect the engine harness from the camshaft position sensor (2).
10. Disconnect the engine harness from the ignition coil (3).
11. Disconnect the engine harness from the fuel rail (4).
12. Remove 1 bolt (5) fixing the engine harness ground wire to the camshaft cover.

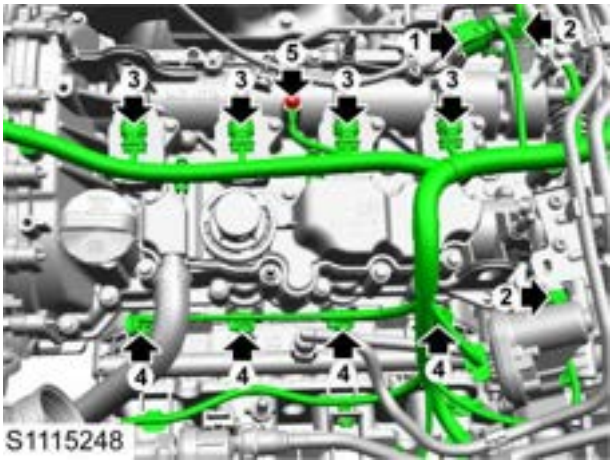

13. Disconnect the engine harness from the EGR pressure sensor (1).
14. Disconnect the engine harness from the EGR temperature sensor (2).
15. Disconnect the engine harness from the coolant temperature sensor (3).

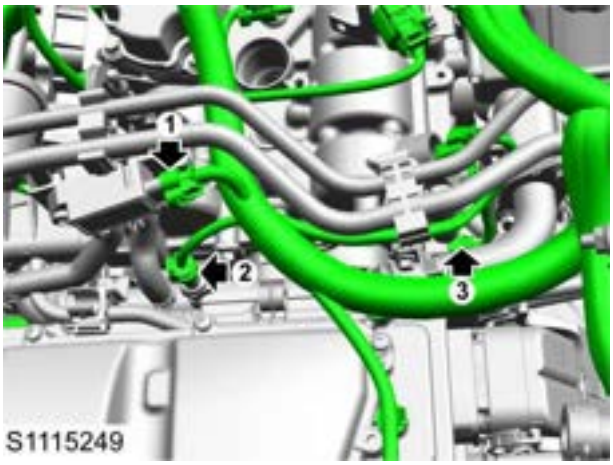

16. Disconnect the engine harness from the EGR module (1).
17. Disconnect the engine harness from the manifold pressure/temperature sensor (2).

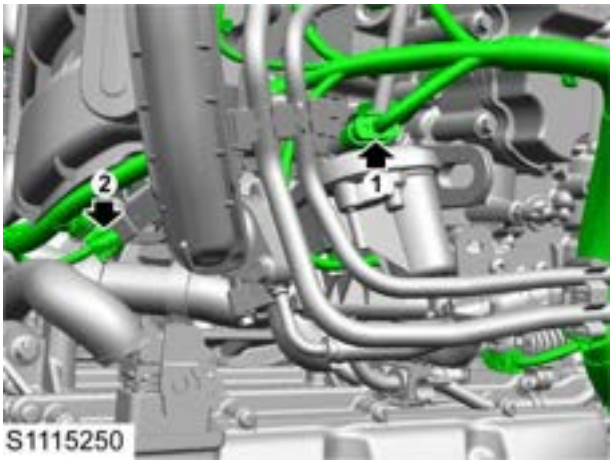

18. Disconnect the engine harness from the canister solenoid valve (1).
19. Disconnect the engine harness from the electronic

throttle (2).

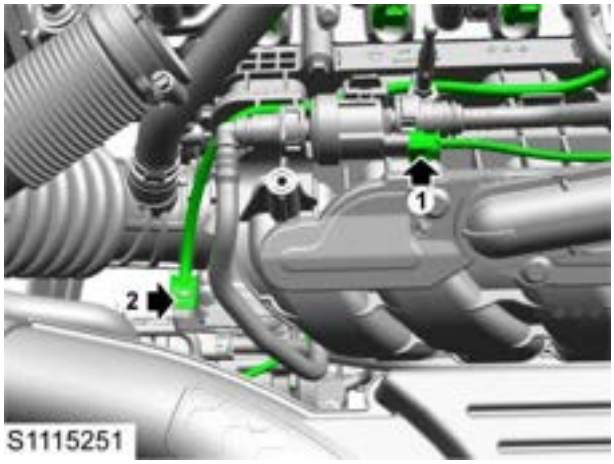

20. Disconnect the engine harness from the hot film meter (1).
21. Disconnect the engine harness from the camshaft phase adjustment solenoid valve magnet (2).

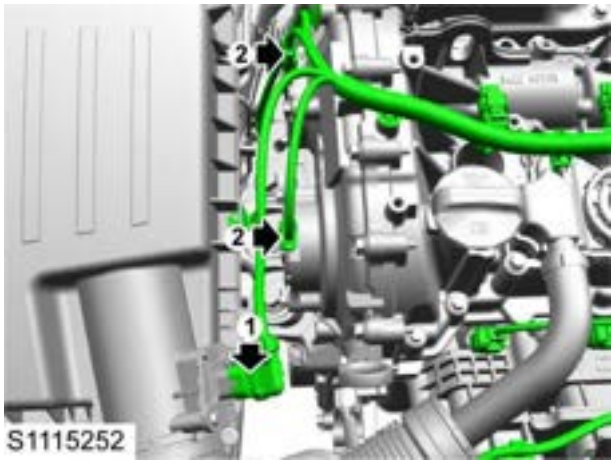

22. Disconnect the engine harness from the knock sensor (1).
23. Disconnect the engine harness from the oil pressure sensor (2).
24. Disconnect the engine harness from the compressor (3).
25. Disconnect the engine harness from the crankshaft position sensor (4).
26. Disconnect the engine harness from the water pump (5).
27. Remove 1 bolt (6) fixing the engine harness ground wire to the cylinder block.

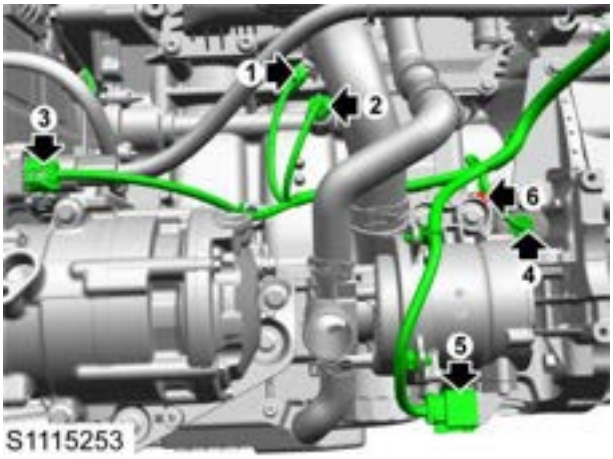

28. Disconnect the engine harness from the oil control valve harness.

29. Pry off all clips and remove the engine harness.

Refit

1. Arrange the engine harness to the engine.
2. Connect the engine harness to the oil control valve harness.
3. Fit 1 bolt fixing the engine harness ground wire to the cylinder block, tighten it to **11-15Nm** , and check the torque.
4. Connect the engine harness to the water pump.
5. Connect the engine harness to the crankshaft position sensor.
6. Connect the engine harness to the compressor.
7. Connect the engine harness to the oil pressure sensor.
8. Connect the engine harness to the knock sensor.
9. Connect the engine harness to the camshaft phase adjustment solenoid valve magnet.
10. Connect the engine harness to the hot film air mass meter.
11. Connect the engine harness to the electronic throttle.
12. Connect the engine harness to the canister solenoid valve.
13. Connect the engine harness to the manifold

pressure/temperature sensor.

14. Connect the engine harness to the EGR module.
15. Connect the engine harness to the coolant temperature sensor.
16. Connect the engine harness to the EGR temperature sensor.
17. Connect the engine harness to the EGR pressure sensor.
18. Fit 1 bolt fixing the engine harness ground wire to the camshaft cover, tighten it to **7-10Nm** , and check the torque.
19. Connect the engine harness to the fuel rail.
20. Connect the engine harness to the ignition coil.
21. Connect the engine harness to the camshaft position sensor.
22. Connect the engine harness to the front oxygen sensor.
23. Connect the engine harness to the front compartment harness.
24. Connect the engine harness to the engine control module.
25. Fit 1 nut fixing the engine harness to the front compartment fuse box, tighten it to **3.5-5.5Nm** , and check the torque.
26. Connect the negative battery cable.
27. Fit the bottom deflector.

Bottom Deflector Refit

28. Fit the resonator assembly.

Resonator Assembly

29. Fit the manual service disconnect.

Manual Service Disconnect (MSD) Refit

Remove

1. Remove the A/C compressor bracket.

A/C Compressor Bracket Remove

2. Disconnect the engine water inlet pipe from the water pump.

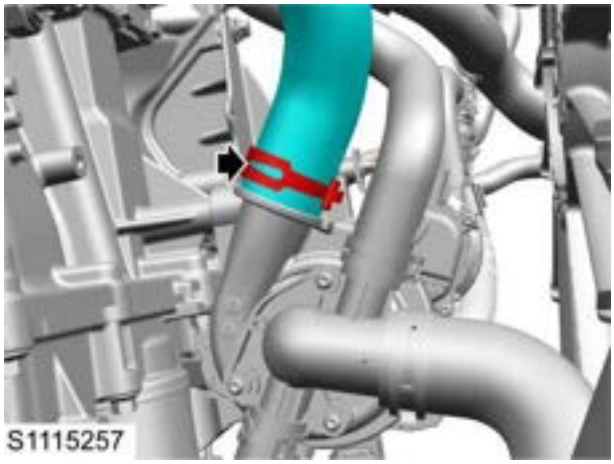

3. Remove 4 bolts fixing the engine water inlet to the engine.

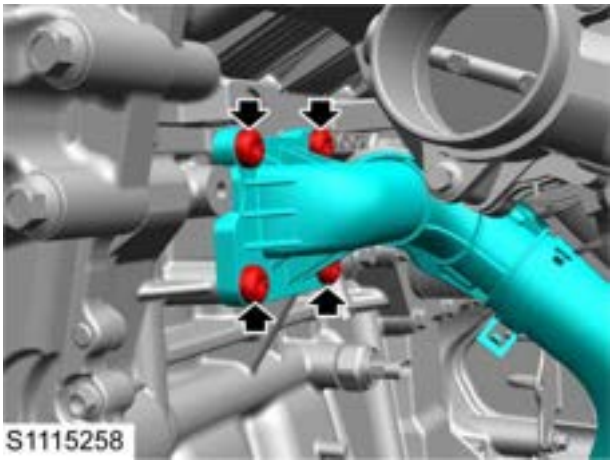

4. Remove the engine water inlet and inlet pipe, and discard the seal ring.

Refit

1. Fit a new seal ring.
2. Fit 4 bolts fixing the engine water inlet to the engine, tighten them to **22-28Nm** , and check the torque.
3. Connect the engine water inlet to the water pump.
4. Fit the A/C compressor bracket.

A/C Compressor Bracket Refit

Special Tool Summary Sheet

Special Tools

Tool Number	Description	Picture
TEN00070	Engine support Engine support	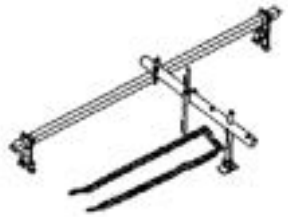 TEN00070
T10007	Engine lift bracket Engine lift bracket	 T10007
TEN00002	Flywheel Timing Locating Pin	 TEN00002
TPT00308	Camshaft Cover Refit Guide Pin	 TPT00308

Tool Number	Description	Picture
TEN00135	Crankshaft/Balancer Holding Tool Crankshaft/Balancer Holding Tool	 TEN00135
TPT00315	Camshaft Timing Locating Tool	 TPT00315
TPT00317	Fixing Tool for Refit/Removal of Phase Modulator	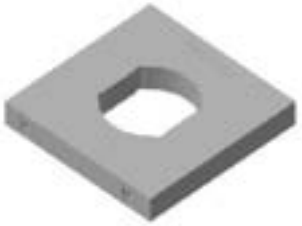 TPT00317
T10016	Piston ring compressor	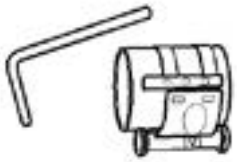 T10016

Tool Number	Description	Picture
TPT00318	Crankshaft Front Oil Seal Installer	TPT00318
TEN00157	Crankshaft Rear Oil Seal Guide Tool	TEN00157
T10001	Engine Oil Pressure Gauge	T10001
TEN00080	Engine Oil Pressure Gauge Connector	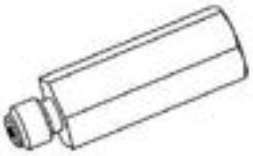 TEN00080

Engine Cooling System

Specification

Torque

Description	Value
Bolt-Exhaust Gas Recirculation Module Intake Pipe to Engine	8-12Nm
Bolt-Tank to Body	4-6Nm
Bolt-Tank bracket to Body	7-10Nm
Bolt-Front radiator to Front end module	7-10Nm

Parameters

Coolant: Model Volume: Engine Coolant Engine Intercooler Coolant	Mixture of water and OAT antifreeze as per a certain ratio. 7.3L 3.0L
Cooling Fan	PWM Fan
Cooling Fan ON or OFF - After Startup ON: OFF:	Meet one of the requirements: 1. start the compressor and ensure that the refrigerant pressure is ≥ 0.22 Mpa; 2. engine coolant temperature is ≥ 100℃; 3. intake air temperature is ≥ 49℃ The above three conditions are not met
Cooling Fan ON or OFF - After Flameout ON: OFF:	Coolant temperature≥108℃ Coolant < 108℃; or within 60 seconds, coolant < 106°, or after more than 60 seconds, just turn off.
Radiator	Crossflow type
Engine Coolant Pump: Voltage Power Rate of flow Pump Differential Pressure Intercooler Coolant Pump Voltage Performance	Electric Water Pump 7 - 20 V MAX 490W±4% MIN 150 L/min MIN 90KPa Electric Water Pump 8 - 16 V 16 L/min@△P 75KPa, 75 W
Thermostat Cylinder Body Thermostat Initial Open Temperature Cylinder Body Thermostat Full Open Temperature Radiator Thermostat Initial Open Temperature Radiator Thermostat Full Open Temperature	Wax-type Component 80 ± 2 ℃ 95℃ 92 ± 2℃ 105℃
Pressure Relief Valve of Expansion Tank Cap High pressure ON Low pressure ON	140 ~ 160 kPa -2 ~ -10 kPa

Description and Operation

System Layout

Engine Cooling Pipeline

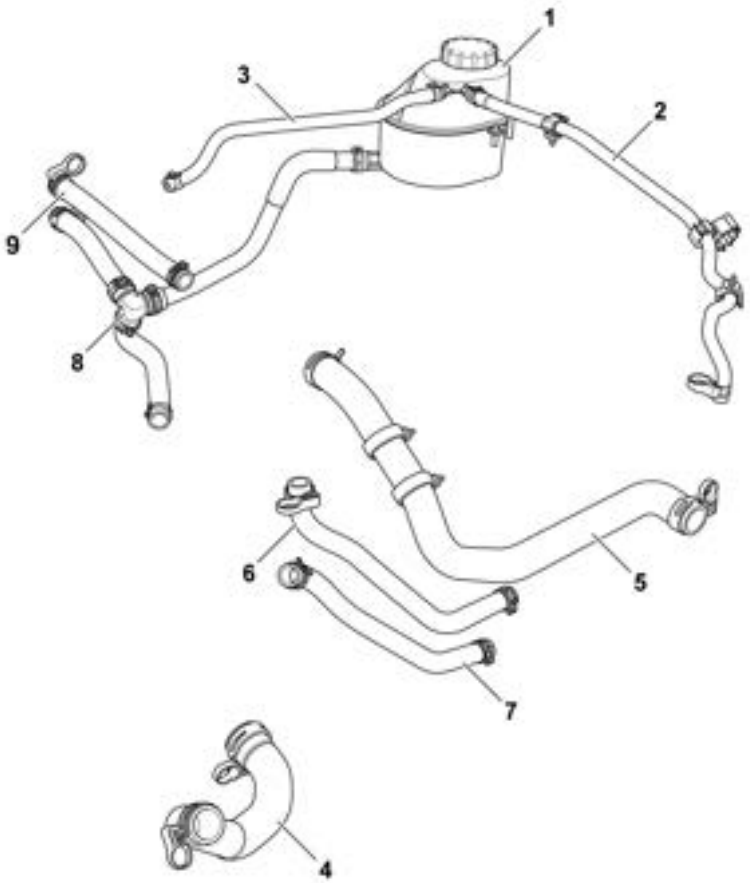

S3120352

1. Coolant Expansion Tank
2. Cooling System Overflow Pipe
3. Engine Expansion Tank Overflow Pipe
4. Pipeline - Radiator to Engine
5. Pipeline - Engine to Radiator
6. Pipeline Assembly - Heater to Automatic Transmission Oil Cooler
7. Pipeline Assembly - Automatic Transmission Oil Cooler to Engine
8. Pipeline Assembly - Heater Core to Water Heater Expansion Tank
9. Pipeline - Engine to Heater

Transmission Cooling Pipeline

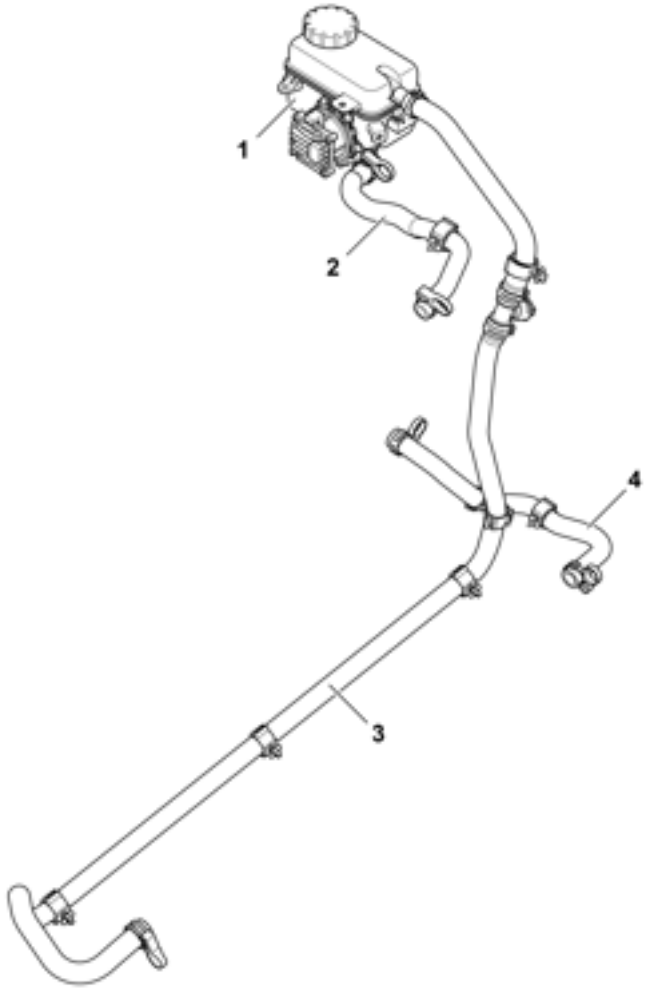

S3120351

1. Coolant Expansion Tank
2. Pipeline Assembly - Electric Water Pump To Electric Drive Unit
3. Pipeline Assembly - Low Temperature Radiator to Expansion Tank
4. Pipeline Assembly - Electric Drive Unit to Low Temperature Radiator

Front-end Cooling Module

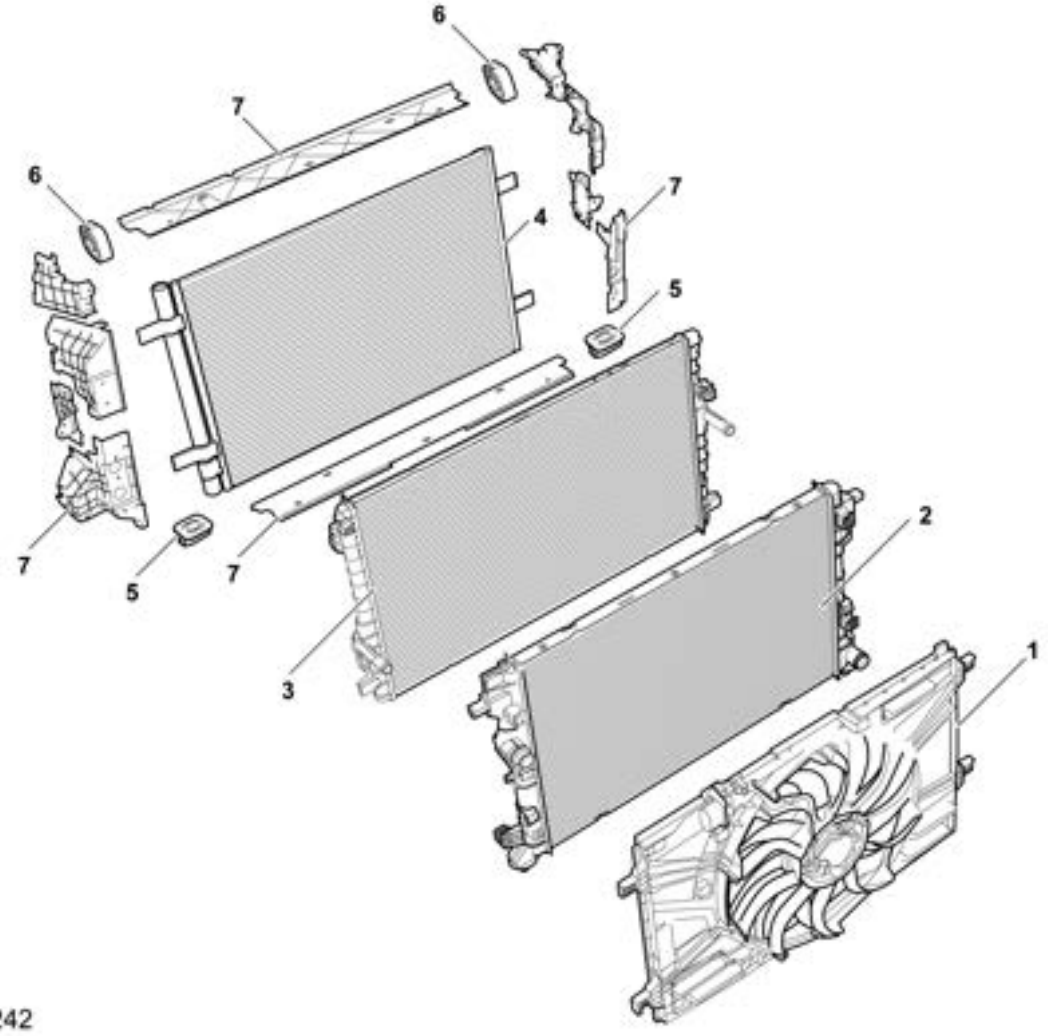

1. Cooling Fan
2. Radiator
3. Intercooler Radiator
4. Condenser
5. Radiator Lower Shock Pad
6. Radiator Upper Shock Pad
7. Wind Scooper Assembly

Water Pump and Thermostat

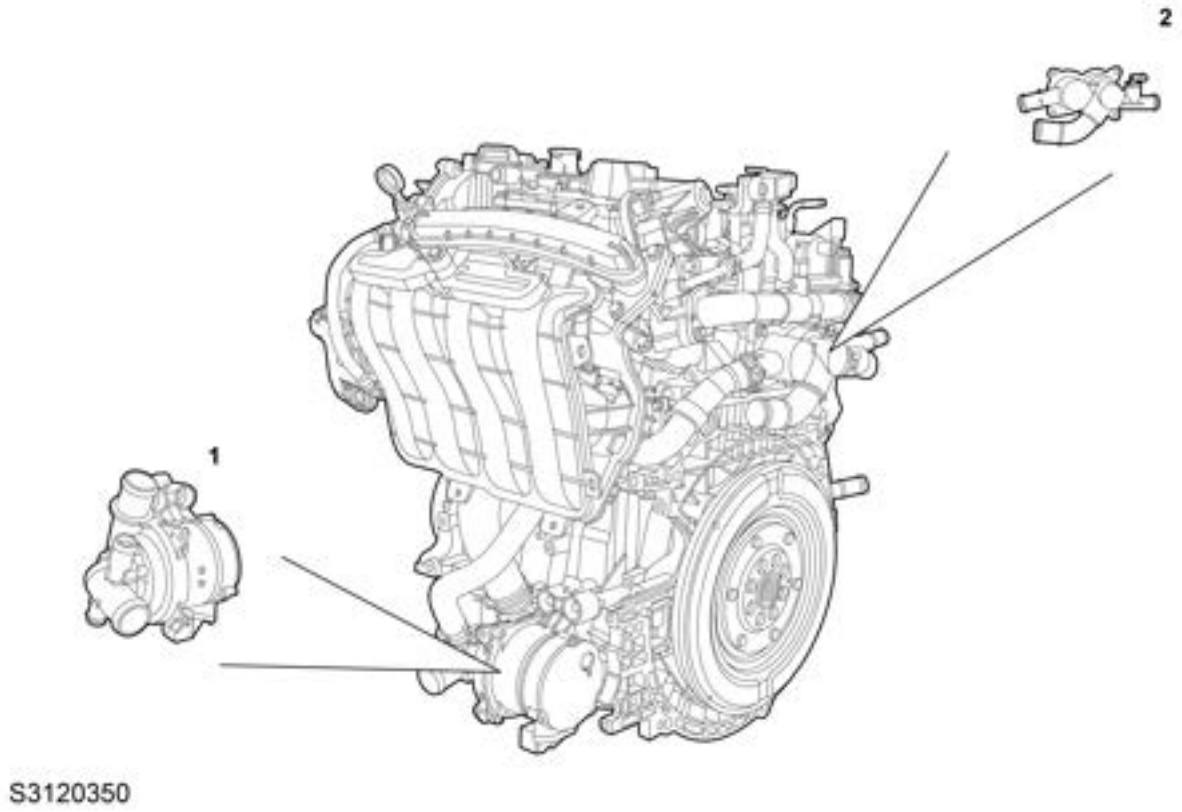

1. Water Pump
2. Thermostat

System Control Diagram

Cooling Circulation

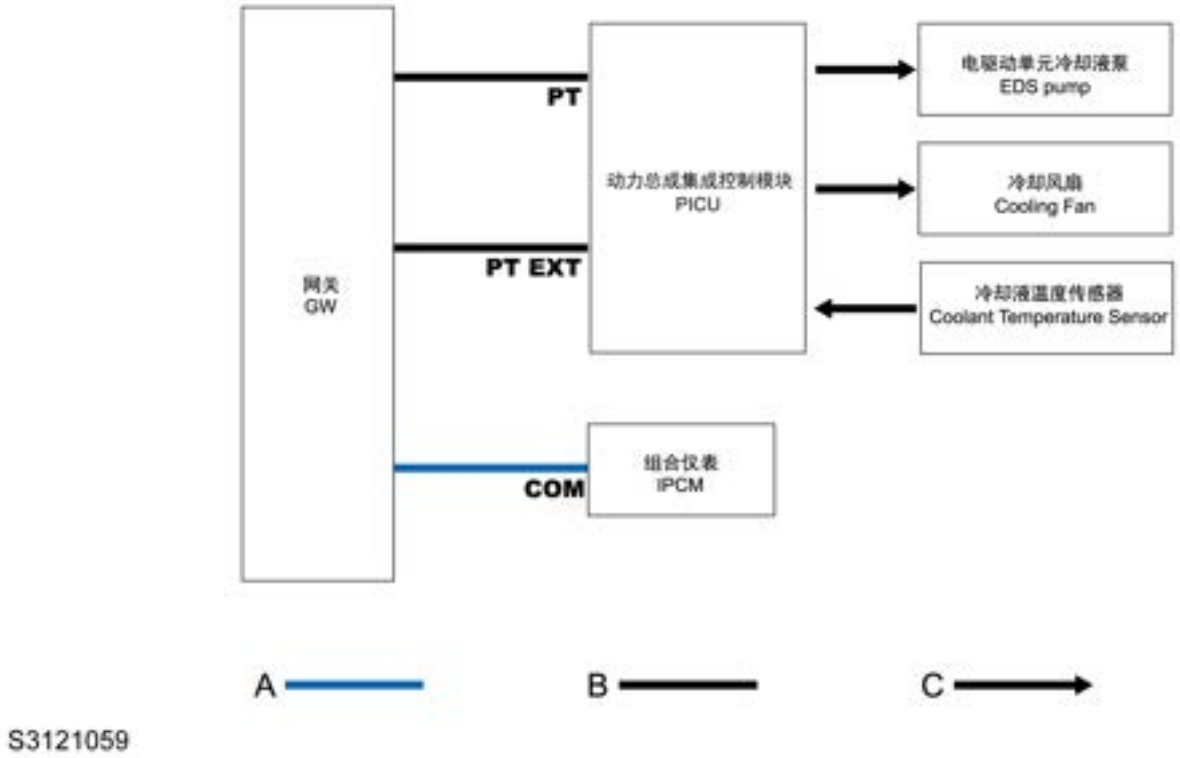

A = Comfort CAN; B = Power HS/Extension CAN; C = Hard Wire

Cooling Fan

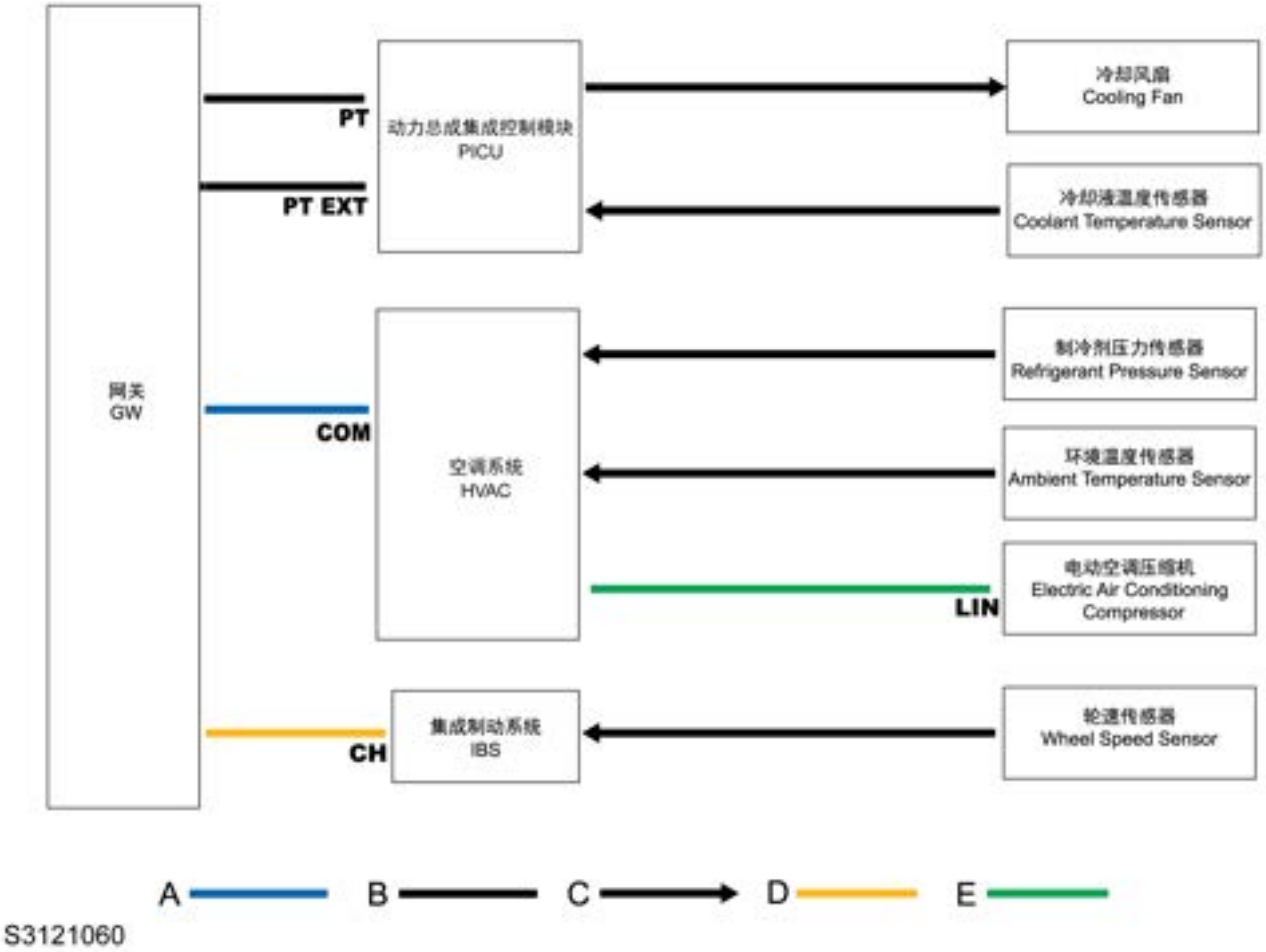

A = Comfort CAN; B = Power HS/Extension CAN; C = Hard Wire; D = Chassis CAN; E = LIN Bus

Description

Overview

The system uses coolant as a medium to circulate through the relevant components to keep those that require thermal management operating in optimal condition.

Caution : Engine coolant will damage paint finished surfaces. If spilled, immediately rinse area with plenty of water.

Components of Cooling System

Coolant

The coolant is composed of water, antifreeze (glycol type) and a small amount of additives. The quality of the water will directly affect the performance of the coolant. Coolant made of water with high hardness and much corrosive ion (for example, chloride ion, sulfate ion) can cause rust and scaling on the heat transfer surface and severe corrosion on the metal.

The coolant provides the anti-freeze, anti-boiling, anti-corrosion, anti-scale and anti-foam functions, etc.

To keep its optimum efficiency, the coolant shall be replaced regularly.

Coolant Pump

The coolant pump drives the coolant to flow.

The engine coolant circulation circuit, the intercooler coolant circulation circuit, and the high-voltage battery pack coolant circulation circuit are driven by the engine coolant electronic water pump, the intercooler coolant pump, and the high-voltage battery pack coolant pump, respectively. Their purpose is to circulate the coolant in order to cool the thermal management components in the corresponding circuits.

Coolant Pipe

Coolant pipes connect the components of the cooling system, and coolant flows between the components via coolant pipes. Coolant pipes are secured to each component by spring clamps.

Expansion Tank

The expansion tank is used to store and supplement coolant in the cooling system.

The level mark on the expansion tank is used to easily check the coolant level. When the coolant is below the MIN mark, refill and maintain the level between MIN and MAX to ensure normal operation of the cooling system.

Thermostat

The thermostat can control the flow rate and direction of the coolant.

When the coolant temperature is low, the wax-type component of the thermostat is in solid state, the thermostat valve switches off under the action of the spring, and the cooling system is in a small circulation status, i.e. the coolant cannot enter into the radiator for circulation, but it can flow to the heater core by the bypass circuit. When the coolant temperature rises, the wax-type components start melting into liquid state gradually followed by the increase of volume, then the thermostat valve will open gradually under the action of the push rod, at this point, the cooling system is in a big circulation status. When the thermostat is fully open, the coolant flows through the radiator.

When the engine works at a low/medium load, increase of the engine water temperature can decrease oil viscosity, mechanical friction loss of the piston, etc. and heat transfer loss and optimize combustion; when the engine works at a high load/speed, decrease of the engine temperature allows the engine to cool down rapidly. Thermostat makes the coolant stay in an optimum temperature in which the engine works.

Front-end Cooling Module

The front-end cooling module consists of the following components:

1. Cooling fan: for the cooling of the front-end cooling module.
2. Radiator: for the cooling of coolant in engine circulation cooling pipeline.
3. Intercooler radiator: for the cooling of coolant in intercooler circulation cooling pipeline.
4. Water-cooled intercooler: for the cooling of engine intake through coolant circulation.
5. Condenser: for the cooling of the A/C refrigerant.

The cooling fan is fixed to the rear of the radiator. The "Suction" type fan draws out air through the intercooler, condenser and radiator.

The radiator is fixed in the front-end cooling module bracket by a rubber bushing, which acts as a shock absorber.

The intercooler radiator is fixed on the front end of the radiator.

The condenser is fixed on the front end of the intercooler radiator.

Wind Scooper

The wind scooper is fitted around the front-end cooling module to manage the airflow from the air inlet grille.

Secondary Engine Coolant Temperature Sensor

The secondary engine coolant temperature sensor is mounted on the radiator assembly to monitor coolant temperature for better control of engine emissions and fuel consumption.

Operation

Overview

Engine Cooling

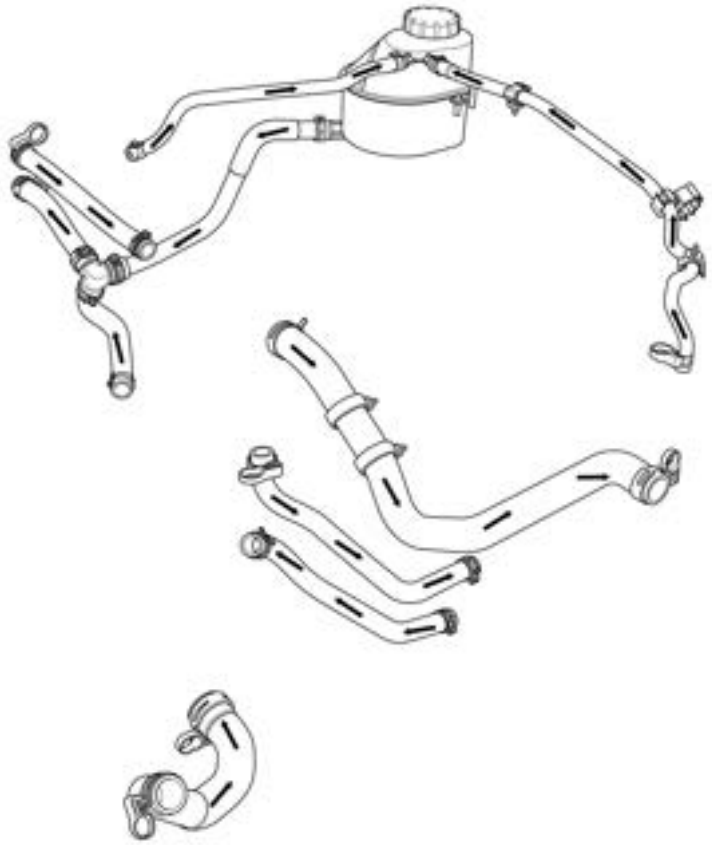

S3120355

Transmission Cooling

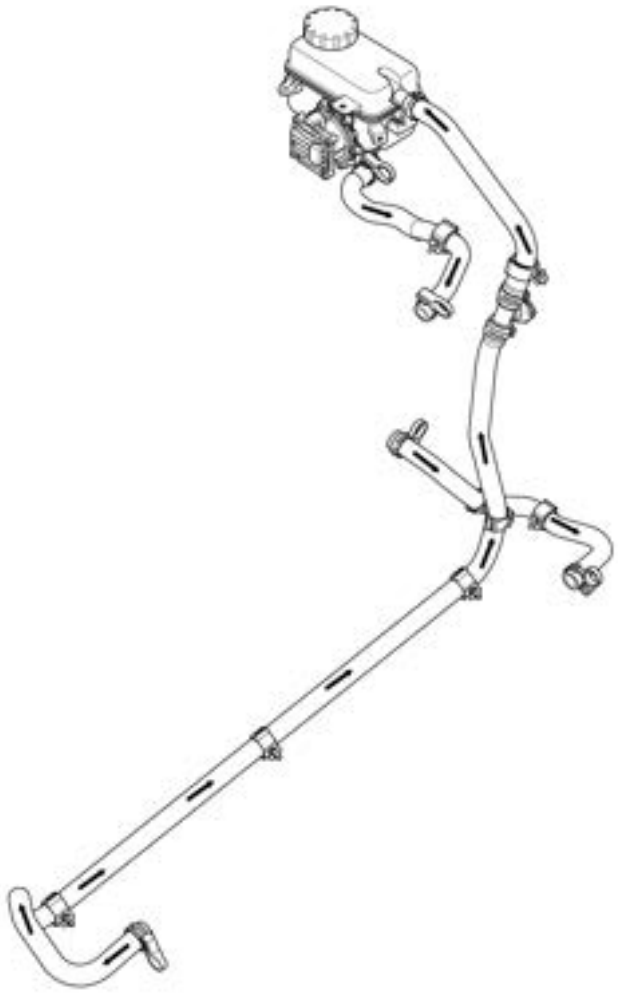

S3120356

Coolant Circulation

The cooling system utilizes the heat conduction principle, conducting heat from the engine components to the coolant. When the engine is cold, keep the thermostat closed to prevent the coolant from flowing through the radiator, however, a small amount of coolant may pass through the bypass, this helps to prevent the accumulated pressure from getting too high. When the engine reaches the normal operating temperature, the thermostat opens, the cool coolant enters into the cylinder block through the hose at the bottom of the radiator, and the hot coolant will flow into the radiator through the hose at the top of the radiator, so that the cool and hot coolant may be balanced to maintain the engine at the best temperature. As the opening of the thermostat increases, the coolant flowing through the radiator increases.

Coolant from the engine enters into the heater core through the heater core water inlet pipe, which meets the requirement for heating.

The expansion tank can remove the air in the coolant. The excess coolant produced by thermal expansion returns to the expansion tank through the overflow pipe of the cylinder head. The hose under the expansion tank compensates the cooling system.

The expansion tank seal cap with relief valve and vacuum valve isolates the cooling system from the ambient atmosphere, the coolant expands when the temperature rises, and the pressure of the cooling system will increase accordingly. The increased pressure raises the boiling point of the coolant, allowing the engine to run at a higher, more efficient operating temperature without the risk of coolant boiling. The pressurization of the cooling system is limited, so a pressure relief valve is provided on the expansion tank cap. By this way, when the working pressure of the system exceeds the permissible maximum value, the excess pressure in the cooling system can be released.

Coolant Temperature Control

The cooling fan provides the corresponding control signal via the PICU and realizes the control by the relay and speed regulation resistor unit or speed regulation module. PICU utilizes the information provided by the engine coolant temperature sensor, A/C pressure sensor/pressure switch, wheel speed sensor, A/C controller and ambient temperature sensor to control the fan speed and engine coolant temperature.

Cooling fan ON: PICU sends the cooling fan ON signal according to the coolant temperature and the pressure value when the A/C is On.

Cooling fan OFF: with the engine running, it checks if the A/C is OFF and if the coolant temperature is below a specified value, then turn off the cooling fan; after the engine stops, check the coolant temperature and carry out the corresponding cooling fan ON/OFF action.

Cooling fan operation - in failure condition: when failure of the coolant temperature sensor, A/C pressure switch and vehicle speed sensor occurs, operate the cooling fan in accordance with the relevant fault strategy.

Coolant Temperature Warning

The engine coolant temperature signal is measured by the ECT sensor.

The engine control module sends the detected coolant temperature signal to the IPCM via the CAN network. IPCM is used to indicate the coolant temperature or provide a high temperature warning. If the coolant temperature sensor fails or coolant temperature is abnormal, the combination IPCM will alert the driver by the warning lamp and message.

Service Guide - ENG Cooling

Coolant - Drain and Refill

Drain - ENG

1. Disconnect the negative battery cable.
2. Remove the bottom deflector.

☞ **Bottom Deflector Remove**

3. Place an appropriate container to collect the spilled coolant.
4. Loosen the clamp, and disconnect the pipeline assembly - radiator to engine from the radiator.

S3123921

5. Drain the coolant using drainage.

Refill - ENG

1. Connect the pipeline assembly - radiator to engine to the radiator and secure it with clamps.
2. Take away the container for collecting liquid, and dispose of it.
3. Prepare the coolant of specified concentration.

☞ **Fluid Fluids**

4. Refill the expansion tank until the coolant level reaches the neck of the expansion tank and keeps still.
5. Connect the negative battery cable.
6. The front bonnet is open; the vehicle is powered on; the shift lever is in P (AT) or N gear (MT); depress the accelerator and brake pedals all the way down and hold for 3 seconds; start the engine within 10 seconds. The large water pump can start running.
7. Observe the flow of coolant in the expansion tank (coolant flow indicates that the water pump is not idling).
8. Keep the coolant flowing for 10-15 minutes. The coolant can be added when the coolant level in the expansion tank is low during this process.
9. When the coolant level in the expansion tank does not change, the coolant refill ends. Please turn off the engine.
10. Check whether the coolant level is between MIN and MAX. If not, add or drain it to standard level as appropriate.
11. Cap the expansion tank.
12. Fit the bottom deflector.

☞ **Bottom Deflector Refit**

Expansion Tank Cap - Pressure Test Inspection - ENG

1. Visually check the expansion tank cap for signs of leakage.
2. Check the hose for signs of rupture or twisting and for the reliability of pipeline connection.
3. Unscrew the coolant expansion tank cap.

Warning：Since injury such as scalding could be caused by escaping steam or coolant, do not remove the filler cap from the coolant expansion tank while the system is hot.

4. Fit the TEN00010 to the expansion tank cap.

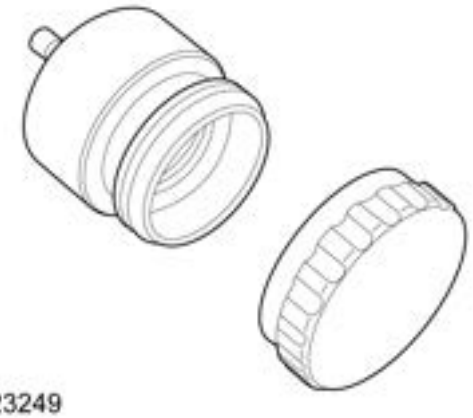

S3123249

5. Connect the pressure hose from the T14001 to the TEN00010 .

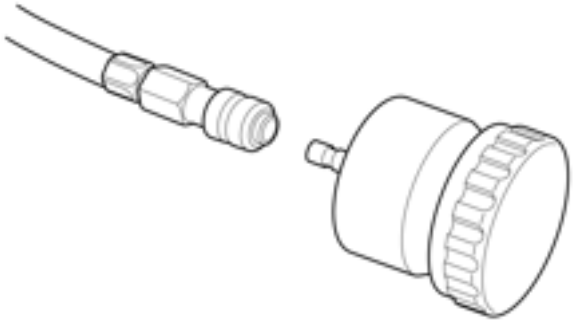

S3123248

6. Pressurize the expansion tank cap slowly to the specified pressure, then check the pressure; if the pressure range is maintained within 140-160KPa, the expansion tank cap is normal.
7. Release pressure through the relief valve on the T14001 .

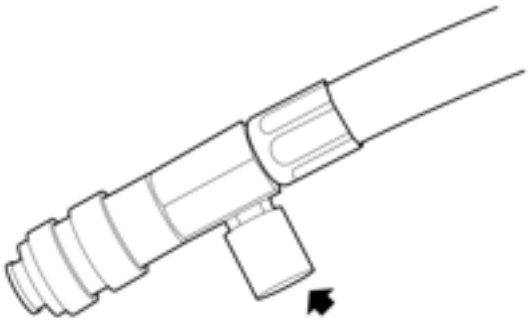

S3123247

8. Remove the pressure hose of T14001 from the TEN00010 .
9. Remove the expansion tank cap from the TEN00010 , and fit it onto the expansion tank.

System Pressure Test
Inspection - ENG

1. Check the hose for signs of rupture or twisting and for the reliability of pipeline connection.
2. Unscrew the coolant expansion tank cap.

Warning : Since injury such as scalding could be caused by escaping steam or coolant, do not remove the filler cap from the coolant expansion tank while the system is hot.

3. Fit the TEN00015 to the expansion tank.
4. Connect the pressure hose from the T14001 to the TEN00015 .
5. Pressurize the system to a pressure within the range of 140-160 KPa slowly and check for leakage.

Warning : Do not exceed the setting pressure value, or the cooling system will be damaged.

6. Visually check the cooling system for signs of coolant leakage.
7. Release pressure through the relief valve on the T14001 .

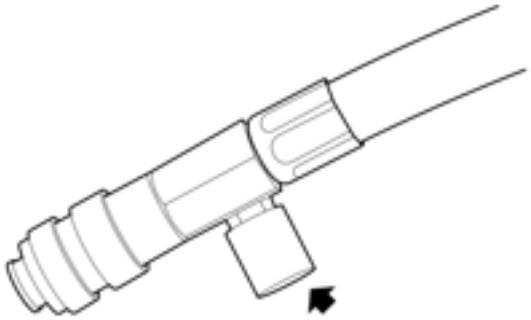

8. Disconnect the hose of T14001 from the TEN00015 .
9. Remove the TEN00015 from the expansion tank and fit the expansion tank cap.

Cooling System Overflow Pipe
Remove - ENG

1. Drain the coolant.

☞Coolant Drain - ENG Refill - ENG Drain Refill

2. Loosen the clamp, and disconnect the hose of the cooling system overflow pipe from the cooling system radiator.

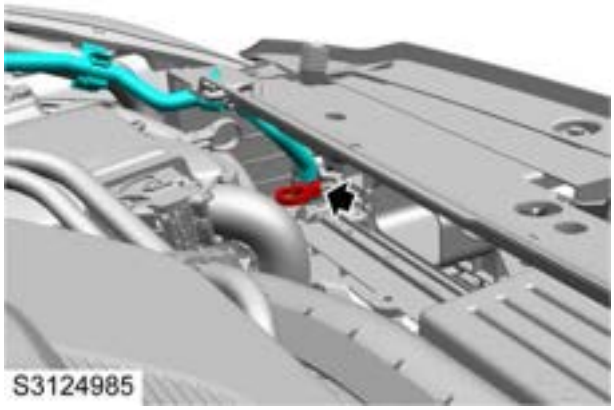

3. Loosen the clamp, and disconnect the hose of cooling system overflow pipe from the radiator expansion tank.

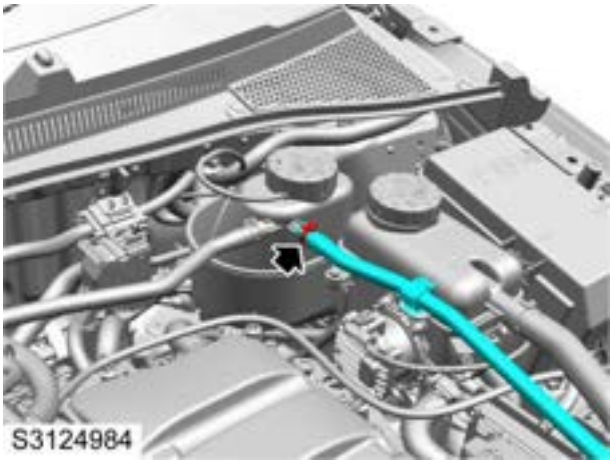

4. Loosen the clip, and remove the cooling system overflow pipe.

Refit - ENG

1. Fit the cooling system overflow pipe, and secure it with clips.
2. Fix the hose of the cooling system overflow pipe to the radiator expansion tank, and secure it with clamps.
3. Fix the hose of the cooling system overflow pipe to the cooling system radiator, and secure it with clamps.
4. Refill the coolant.

☞Coolant Drain - ENG Refill - ENG Drain Refill

Engine Expansion Tank Overflow Pipe

Remove

1. Drain the coolant.

☞Coolant Drain - ENG Refill - ENG Drain Refill

2. Loosen the clamp (1), and disconnect the hose of the engine expansion tank overflow pipe from the radiator expansion tank.
3. Loosen the clamp (2), and disconnect the hose of the engine expansion tank overflow pipe from the engine.

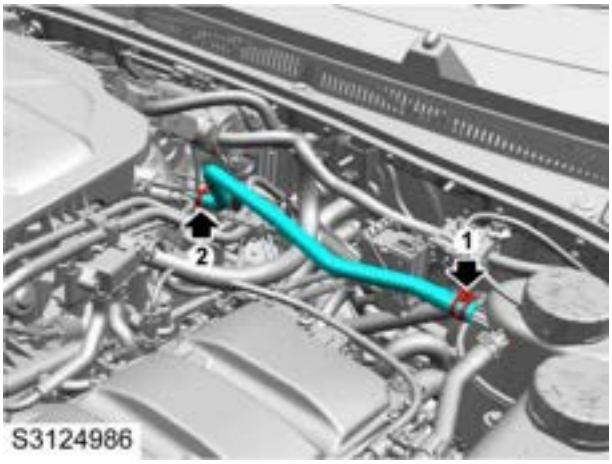

4. Remove the engine expansion tank overflow pipe.

Refit

1. Fit the engine expansion tank overflow pipe.
2. Fit the hose of the engine expansion tank overflow pipe to the engine, and secure it with clamps.
3. Fix the hose of the engine expansion tank overflow pipe to the radiator expansion tank, and secure it with clamps.
4. Refill the coolant.

☞Coolant Drain - ENG Refill - ENG Drain Refill

Remove

1. Drain the coolant.

☞Coolant Drain - ENG Refill - ENG Drain Refill

2. Remove the engine control module.

☞Engine Control Module

3. Loosen the clamp (1), and disconnect the hose of pipeline assembly - engine to heater core from the engine assembly.
4. Loosen the clamp (2), and disconnect the hose of pipeline assembly - engine to heater core from the A/C box assembly.

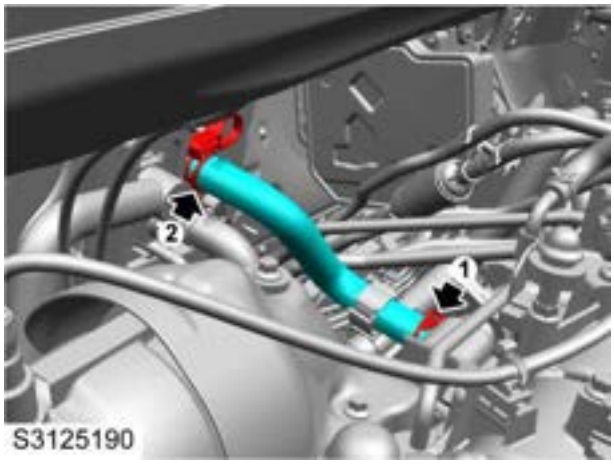

5. Loosen the clip, and remove the pipeline assembly - engine to heater core.

Refit

1. Fit the pipeline assembly - engine to heater core, and secure it with clips.
2. Fix the hose of pipeline assembly - engine to heater core to the A/C box assembly, and secure it with clamps.
3. Fix the hose of pipeline assembly - engine to heater core to the engine assembly, and secure it with clamps.
4. Fit the engine control module.

☞Engine Control Module

5. Refill the coolant.

☞Coolant Drain - ENG Refill - ENG Drain Refill

Remove

1. Drain the coolant.

Coolant Drain - ENG Refill - ENG Drain Refill

2. Remove the bottom deflector.

Bottom Deflector Remove

3. Loosen the clamp, and disconnect the hose of pipeline assembly - heater core to water heater expansion tank from the expansion tank.

4. Loosen the clamp, and disconnect the hose of pipeline assembly - heater core to water heater expansion tank from the A/C box assembly.

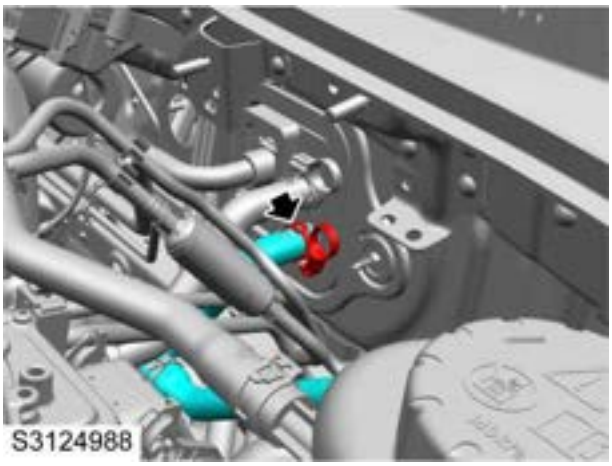

5. Loosen the clamp, and disconnect the hose of pipeline assembly - heater core to water heater expansion tank from the engine assembly.

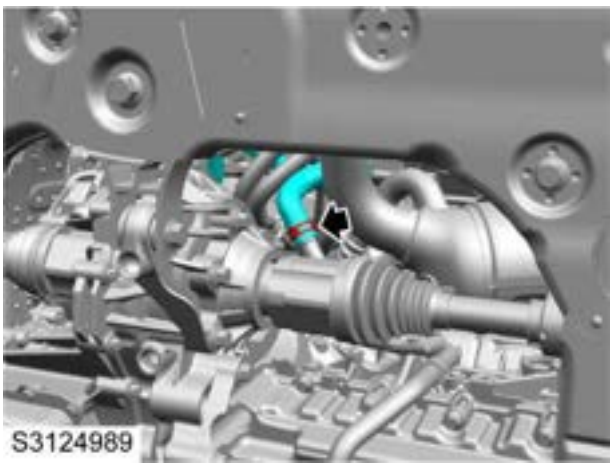

6. Remove the pipeline assembly - heater core to water heater expansion tank.

Refit

1. Fit the pipeline assembly - heater core to water heater expansion tank.
2. Fix the hose of the pipeline assembly - heater core to water heater expansion tank to the engine assembly, and secure it with clamps.
3. Fix the hose of the pipeline assembly - heater core to water heater expansion tank to the A/C box assembly, and secure it with clamps.
4. Fix the hose of the pipeline assembly - heater core to water heater expansion tank to the expansion tank, and secure it with clamps.
5. Fit the bottom deflector.

Bottom Deflector Refit

6. Refill the coolant.

Coolant Drain - ENG Refill - ENG Drain Refill

Remove

1. Drain the coolant.

☞Coolant Drain - ENG Refill - ENG Drain Refill

2. Remove the bottom deflector.

☞Bottom Deflector Remove

3. Disconnect the harness connector from the EGR module inlet pipe.
4. Remove 6 bolts fixing the EGR module inlet pipe to the engine assembly.

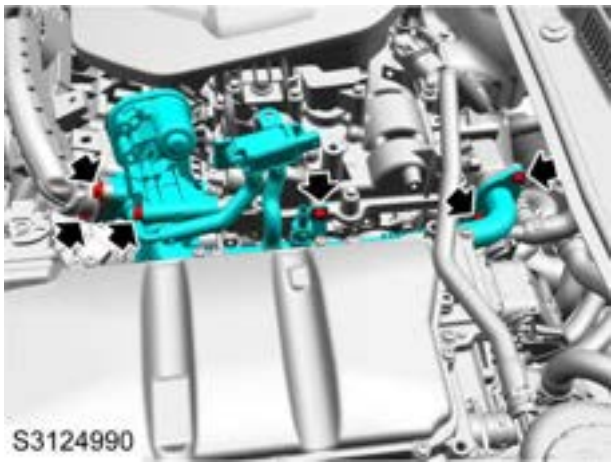

5. Remove 2 screws fixing the EGR module inlet pipe to the engine assembly.

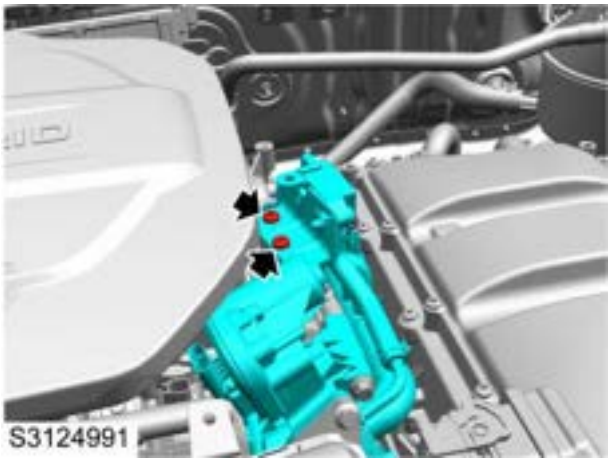

6. Loosen the clamp, and disconnect the hose of pipeline assembly - engine to radiator from the engine.

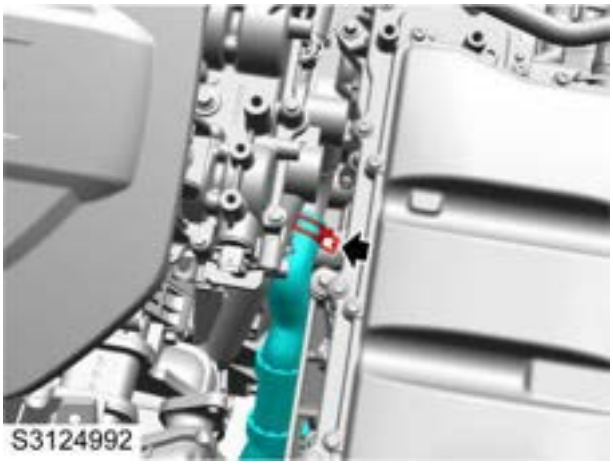

7. Loosen the clamp, and disconnect the hose of pipeline assembly - engine to radiator from the radiator.

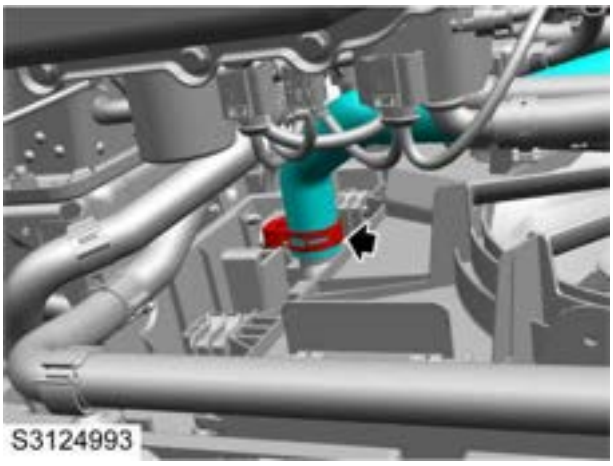

8. Loosen the clip and remove the pipeline - engine to radiator.

Refit

1. Fix the hose of pipeline assembly- engine to radiator to the engine, and secure it with clamps.
2. Fix the hose of pipeline assembly - engine to radiator to the radiator, and secure it with clamps.
3. Fix the EGR module inlet pipe to the engine assembly, fit and tighten 2 screws.
4. Fix the EGR module inlet pipe to the engine assembly, fit and tighten 6 bolts to **8-12Nm** , and check the torque.
5. Connect the harness connector of the EGR module inlet pipe.
6. Fit the bottom deflector.

☞Bottom Deflector Refit

7. Refill the coolant.

☞Coolant Drain - ENG Refill - ENG Drain Refill

Remove

1. Drain the coolant.

☞Coolant Drain - ENG Refill - ENG Drain Refill

2. Remove the bottom deflector.

☞Bottom Deflector Remove

3. Loosen the clamp (1), and disconnect the hose of pipeline assembly - radiator to engine from the radiator.
4. Loosen the clamp (2), and disconnect the hose of pipeline assembly - radiator to engine from the engine.

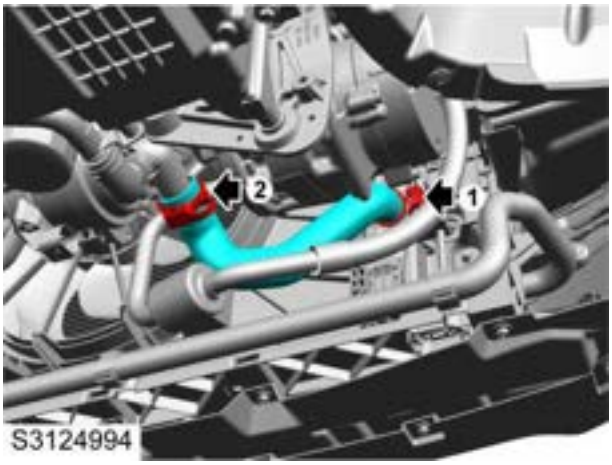

5. Remove the pipeline assembly - radiator to engine.

Refit

1. Fit the pipeline assembly - radiator to engine.
2. Fix the hose of pipeline assembly - radiator to engine to the engine, and secure it with clamps.
3. Fix the hose of pipeline assembly - radiator to engine to the radiator, and secure it with clamps.
4. Fit the bottom deflector.

☞Bottom Deflector Refit

5. Refill the coolant.

☞Coolant Drain - ENG Refill - ENG Drain Refill

Pipeline Assembly - Automatic Transmission Oil Cooler to Engine

Remove

1. Drain the coolant.

☞ Coolant Drain - ENG Refill - ENG Drain Refill

2. Remove the bottom deflector.

☞ Bottom Deflector Remove

3. Loosen the clamp (1), and disconnect the hose of pipeline assembly - automatic transmission oil cooler to engine from the automatic transmission oil cooler.
4. Loosen the clamp (2), and disconnect the hose of pipeline assembly - automatic transmission oil cooler to engine from the engine.

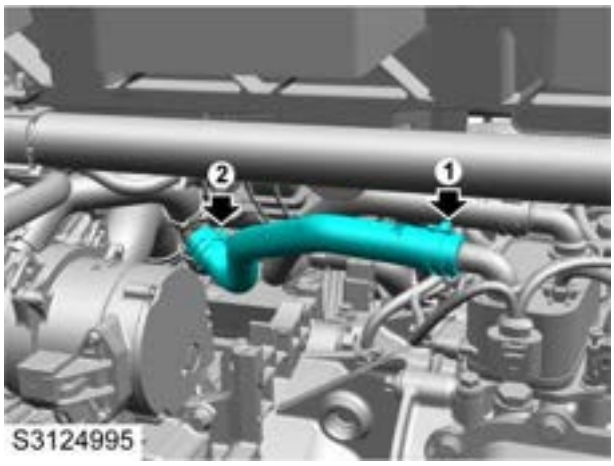

5. Remove the pipeline assembly - automatic transmission oil cooler to engine.

Refit

1. Fit the pipeline assembly - automatic transmission oil cooler to engine.
2. Fix the hose of pipeline assembly - automatic transmission oil cooler to engine to the engine, and secure it with clamps.
3. Fix the hose of pipeline assembly - automatic transmission oil cooler to engine to the automatic transmission oil cooler, and secure it with clamps.
4. Fit the bottom deflector.

☞ Bottom Deflector Refit

5. Refill the coolant.

☞ Coolant Drain - ENG Refill - ENG Drain Refill

Pipeline Assembly - Heater to Automatic Transmission Oil Cooler

Remove

1. Drain the coolant.

Coolant Drain - ENG Refill - ENG Drain Refill

2. Remove the bottom deflector.

Bottom Deflector Remove

3. Loosen the clamp (1), and disconnect the hose of pipeline assembly - heater to automatic transmission oil cooler from the automatic transmission oil cooler.
4. Loosen the clamp (2), and disconnect the hose of pipeline assembly - heater to automatic transmission oil cooler from the engine.

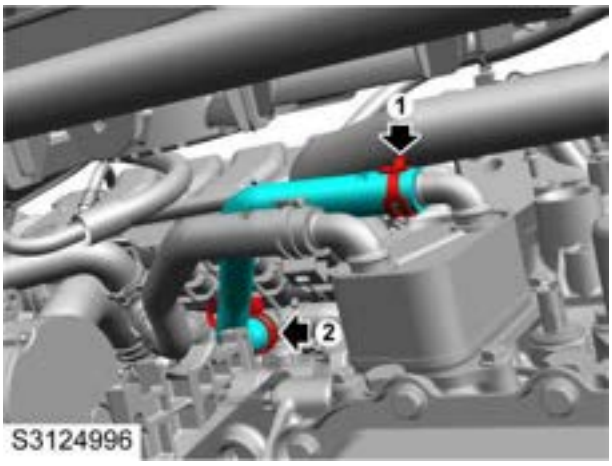

5. Remove the pipeline assembly - heater to automatic transmission oil cooler.

Refit

1. Fit the pipeline assembly - heater to automatic transmission oil cooler.
2. Fix the hose of pipeline assembly - heater to automatic transmission oil cooler to the engine, and secure it with clamps.
3. Fix the hose of pipeline assembly - heater to automatic transmission oil cooler to the automatic transmission oil cooler, and secure it with clamps.
4. Fit the bottom deflector.

Bottom Deflector Refit

5. Refill the coolant.

Coolant Drain - ENG Refill - ENG Drain Refill

Remove - ENG

1. Drain the coolant.

☞Coolant Drain - ENG Refill - ENG Drain Refill

2. Loosen the clamp, and disconnect the hose of cooling pipeline from the coolant expansion tank.

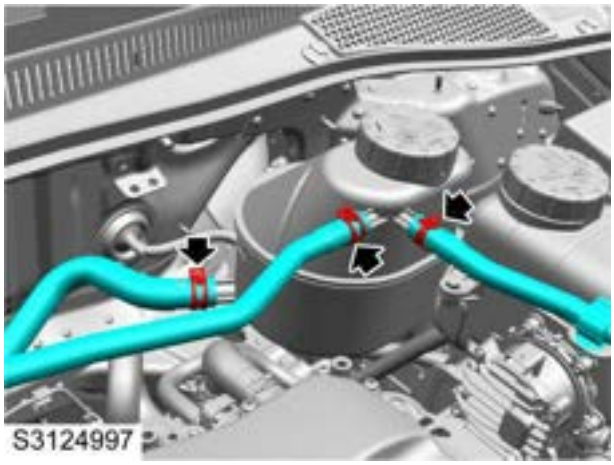

3. Remove 1 bolt fixing the coolant expansion tank to the body, and remove the coolant expansion tank.

Refit - ENG

1. Fix the coolant expansion tank to the body, fit 1 bolt, tighten it to **4-6Nm** , and check the torque.
2. Fix the hose of cooling pipeline to the radiator expansion tank and secure it with clamps.
3. Refill the coolant.

☞Coolant Drain - ENG Refill - ENG Drain Refill

Coolant - Drain and Refill

Drain

1. Disconnect the negative battery cable.
2. Remove the bottom deflector.

☞Bottom Deflector Remove

3. Place an appropriate container to collect the spilled coolant.
4. Cover the expansion tank cap with a wet cloth, and unscrew the cap.

Warning :
Do not unscrew the coolant expansion tank cap when the cooling system is hot - escaping steam or hot coolant could cause serious injury.

5. Release the clamp (1) and disconnect the hose of pipeline - intercooler radiator to the electric water pump from the expansion tank outlet pipe.

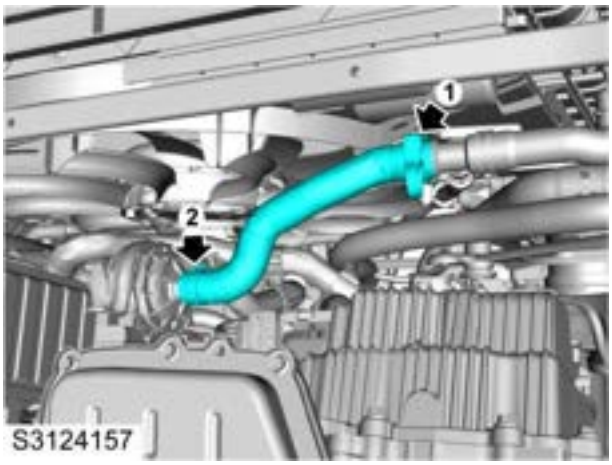

6. Drain the coolant using drainage.

Refill

1. Connect the pipeline assembly - radiator to engine to the radiator and secure it with clamps.
2. Take away the container for collecting liquid, and dispose of it.
3. Prepare the coolant of specified concentration.

☞Fluid Fluids

4. Refill the expansion tank until the coolant level reaches the neck of the expansion tank and keeps still.
5. Connect the negative battery cable.
6. The front bonnet is open; the vehicle is powered on, and the engine is shut down; the shift lever is in P (AT) or N gear (MT); simultaneously depress the accelerator and brake pedals, with a depth of depressing exceeding 50%, and hold for 3 seconds. This will trigger the operation of the WCAC electric water pump.

Note : Prevent the battery from feeding, and charge the battery with an external power supply if necessary.

7. Observe the flow of coolant in the expansion tank (coolant flow indicates that the water pump is not idling)
8. Keep the coolant flowing for 10-15 minutes. The coolant can be added when the coolant level in the expansion tank is low during this process.
9. When the coolant level in the expansion tank does not change, the coolant refill ends.
10. Check whether the coolant level is between MIN and MAX. If not, add or drain it to standard level as appropriate.
11. Cap the expansion tank.
12. Fit the bottom deflector.

☞Bottom Deflector Refit

Expansion Tank Cap - Pressure Test Check

1. Visually check the expansion tank cap for signs of leakage.
2. Check the hose for signs of rupture or twisting and for the reliability of pipeline connection.
3. Unscrew the coolant expansion tank cap.

Warning：Since injury such as scalding could be caused by escaping steam or coolant, do not remove the filler cap from the coolant expansion tank while the system is hot.

4. Fit the TEN00010 to the expansion tank cap.

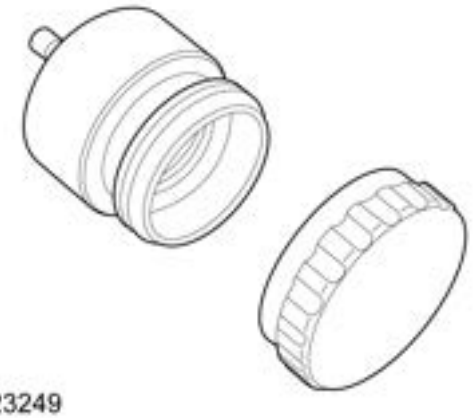

S3123249

5. Connect the pressure hose from the T14001 to the TEN00010

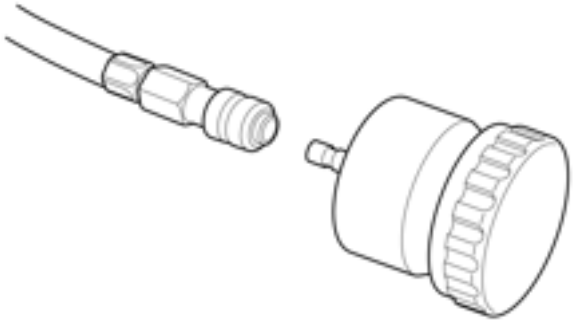

S3123248

6. Pressurize the expansion tank cap slowly to the specified pressure, then check the pressure; if the pressure range is maintained within 140-160KPa, the expansion tank cap is normal.
7. Release pressure through the relief valve on the T14001 .

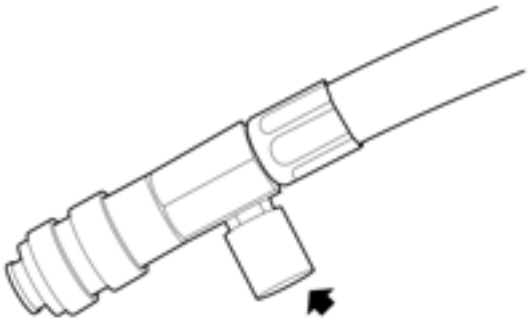

S3123247

8. Remove the pressure hose of T14001 from the TEN00010 .
9. Remove the expansion tank cap from the TEN00010 , and fit it onto the expansion tank.

System Pressure Test

Check

1. Check the hose for signs of rupture or twisting and for the reliability of pipeline connection.
2. Unscrew the coolant expansion tank cap.

Warning : Since injury such as scalding could be caused by escaping steam or coolant, do not remove the filler cap from the coolant expansion tank while the system is hot.

3. Fit the TEN00015 to the expansion tank.
4. Connect the pressure hose from the T14001 to the TEN00015 .
5. Pressurize the system to a pressure within the range of 140-160 KPa slowly and check for leakage.

Warning : Do not exceed the setting pressure value, or the cooling system will be damaged.

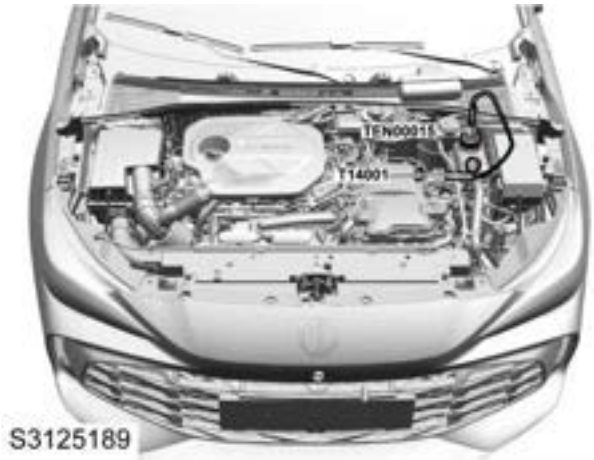

6. Visually check the cooling system for signs of coolant leakage.
7. Release pressure through the relief valve on the T14001 .

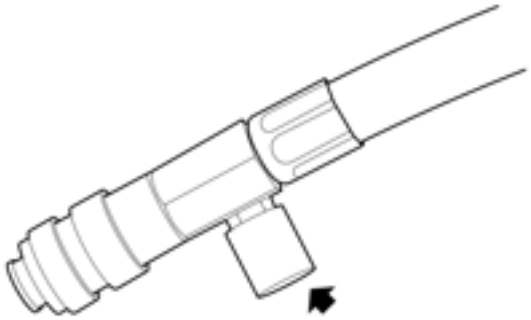

8. Disconnect the hose of T14001 from the TEN00015 .
9. Remove the TEN00015 from the expansion tank and fit the expansion tank cap.

Pipeline Assembly - Low Temperature Radiator to Expansion Tank
Remove - Transmission

1. Drain the coolant.

☞ Coolant Drain - ENG Refill - ENG Drain Refill

2. Remove the bottom deflector.

☞ Bottom Deflector Remove

3. Remove the front bumper.

☞ Front Bumper Remove

4. Loosen the clamp, and disconnect the hose of pipeline assembly - low temperature radiator to expansion tank from the coolant expansion tank.

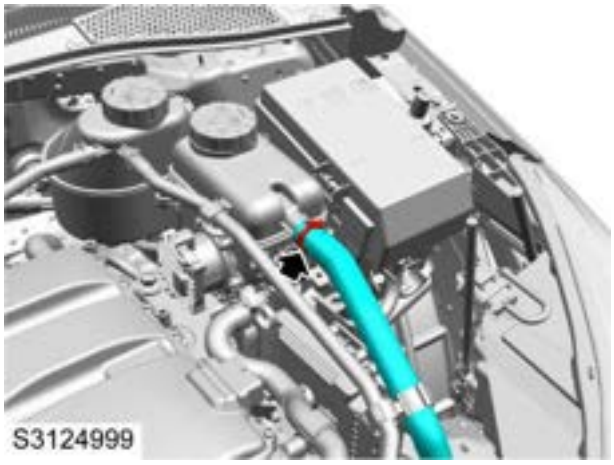

5. Loosen the clamp, and disconnect the hose of pipeline assembly - low temperature radiator to expansion tank from the radiator.

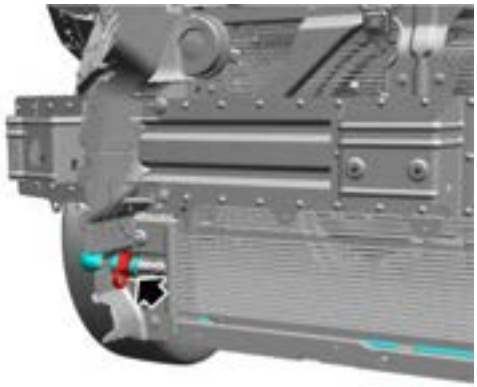

6. Loosen the clips, and remove the pipeline assembly - low temperature radiator to expansion tank.

Refit - Transmission

1. Fit the pipeline assembly - low temperature radiator to expansion tank, and secure it with clips.
2. Fix the hose of pipeline assembly - low temperature radiator to expansion tank to the radiator, and secure it with clamps.
3. Fix the hose of pipeline assembly - low temperature radiator to expansion tank to the coolant expansion tank, and secure it with clamps.
4. Fit the front bumper.

☞ Front Bumper Refit

5. Fit the bottom deflector.

☞ Bottom Deflector Refit

6. Refill the coolant.

☞ Coolant Drain - ENG Refill - ENG Drain Refill

Remove

1. Drain the coolant.

Coolant Drain - ENG Refill - ENG Drain Refill

2. Loosen the clamp, and disconnect the hose of pipeline assembly - electric coolant pump to electric drive unit from the coolant expansion tank.
3. Loosen the clamp, and disconnect the hose of pipeline assembly - electric coolant pump to electric drive unit from the transmission assembly.

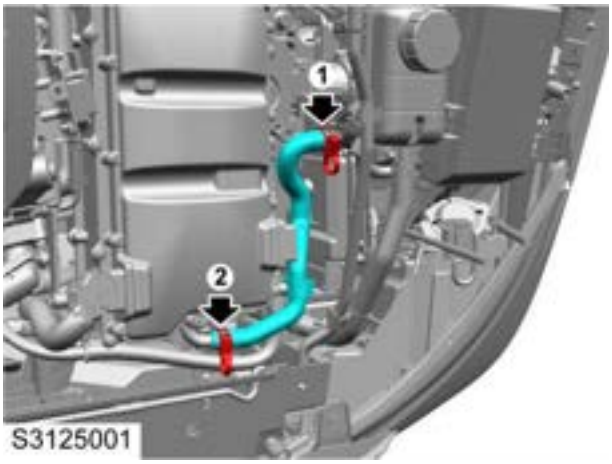

4. Loosen the clips, and remove the pipeline assembly - electric coolant pump to the electric drive unit.

Refit

1. Fit the pipeline assembly - electric water pump to electric drive unit, and secure it with clips.
2. Fix the hose of pipeline assembly - electric water pump to electric drive unit to the transmission assembly, and secure it with clamps.
3. Fix the hose of pipeline assembly - electric water pump to electric drive unit to the coolant expansion tank, and secure it with clamps.
4. Refill the coolant.

Coolant Drain - ENG Refill - ENG Drain Refill

Pipeline Assembly - Electric Drive Unit to Low Temperature Radiator

Remove

1. Drain the coolant.

Coolant Drain - ENG Refill - ENG Drain Refill

2. Remove the front bumper.

Front Bumper Remove

3. Loosen the clamp (1), and disconnect the hose of pipeline assembly - electric drive unit to low temperature radiator from the radiator.
4. Loosen the clamp (2), and disconnect the hose of pipeline assembly - electric drive unit to low temperature radiator from the transmission assembly.

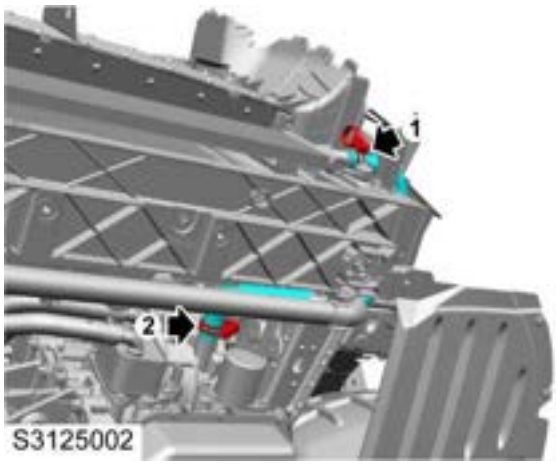

5. Loosen the clip, and remove the pipeline assembly - electric drive unit to low temperature radiator.

Refit

1. Fit the pipeline assembly - electric drive unit to low temperature radiator, and secure it with clips.
2. Fix the hose of pipeline assembly - electric drive unit to low temperature radiator to the transmission assembly, and secure it with clamps.
3. Fix the hose of pipeline assembly - electric drive unit to low temperature radiator to the radiator, and secure it with clamps.
4. Fit the front bumper.

Front Bumper Refit

5. Refill the coolant.

Coolant Drain - ENG Refill - ENG Drain Refill

Remove - Transmission

1. Drain the coolant.

☞Coolant Drain - ENG Refill - ENG Drain Refill

2. Loosen the clamp, and disconnect the hose of cooling pipeline from the coolant expansion tank.

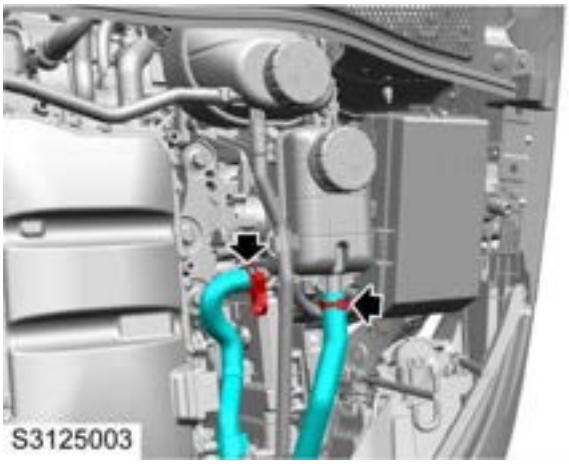

3. Remove 1 bolt fixing the coolant expansion tank to the body, loosen the clip and remove the coolant expansion tank.

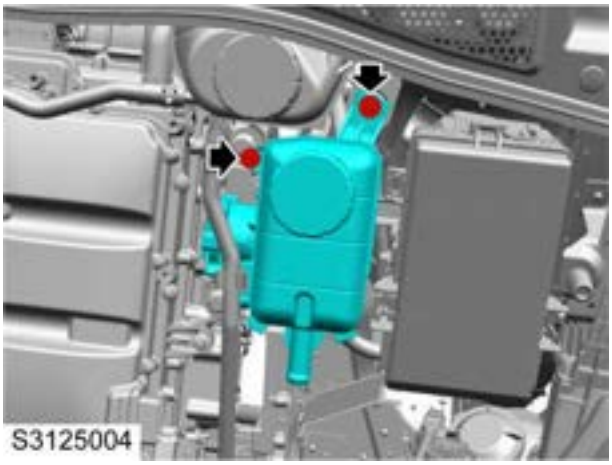

4. Remove 3 bolts fixing the tank bracket to the body, and remove the tank bracket.

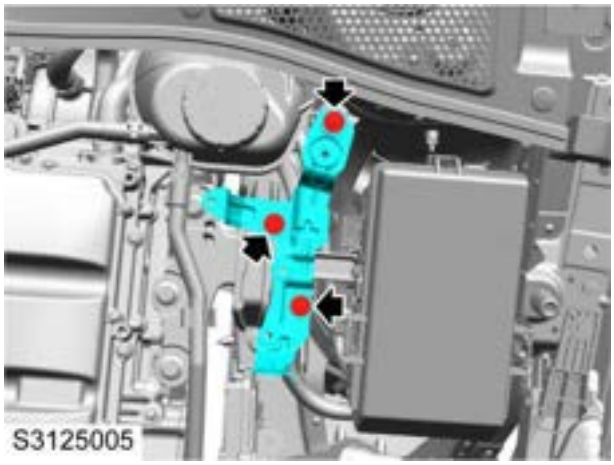

Refit - Transmission

1. Fix the water tank bracket to the body, fit 3 bolts, tighten them to **7-10Nm** , and check the torque.
2. Fix the coolant expansion tank to the body, fit 1 bolt, tighten it to **7-10Nm** , and check the torque.
3. Fix the hose of cooling pipeline to the coolant expansion tank, and check the torque.
4. Refill the coolant.

☞Coolant Drain - ENG Refill - ENG Drain Refill

Cooling Fan

Remove

1. Remove the front-end module.

☞ Front-end Module Remove

2. Disconnect the connector of the cooling fan assembly.

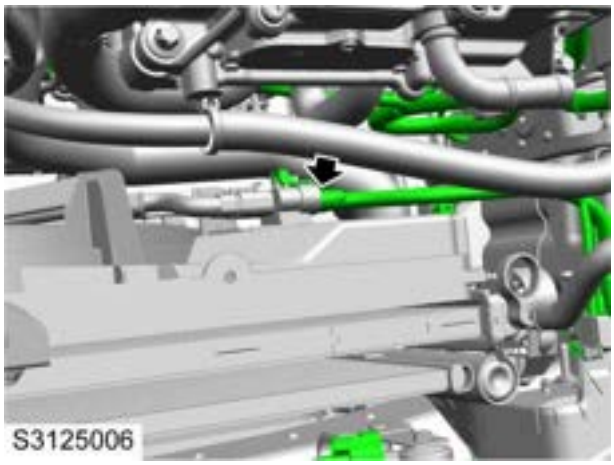

3. Disengage the clips fixing the cooling fan assembly to the radiator assembly.

S3125007

4. Remove the cooling fan assembly.

Refit

1. Fit the cooling fan assembly.
2. Fix the cooling fan assembly to the radiator assembly, and secure it with clips.
3. Connect the connector of the cooling fan assembly.
4. Fit the front-end module.

☞ Front-end Module Refit

Radiator

Remove - Rear

1. Drain the coolant.

☞ Coolant Drain - ENG Refill - ENG Drain Refill

2. Remove the cooling fan.

☞ Cooling Fan Remove

3. Loosen the clamp, and disconnect the hose of cooling pipeline from the radiator.

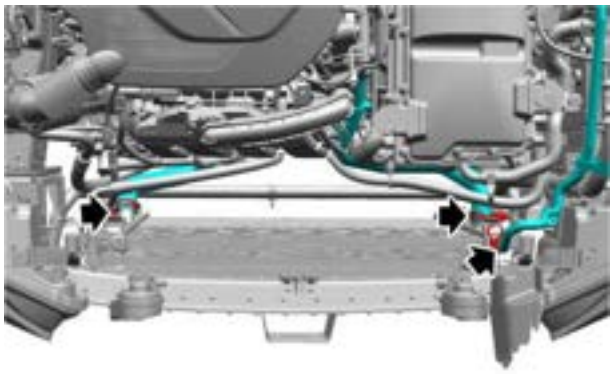

S3125008

4. Loosen the clip fixing the condenser to the radiator assembly.

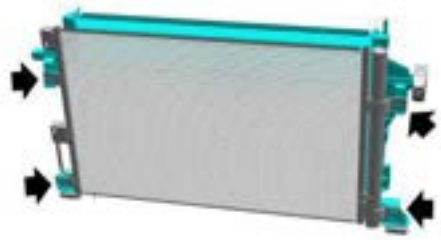

S3125009

Refit - Rear

1. Fix the condenser to the radiator assembly, and secure it with clips.
2. Fix the hose of cooling pipeline to the radiator and secure it with clamps.
3. Fit the cooling fan.

☞ Cooling Fan Refit

4. Refill the coolant.

☞ Coolant Drain - ENG Refill - ENG Drain Refill

Cooling System Radiator
Remove - Front

1. Drain the coolant.

Coolant Drain - ENG Refill - ENG Drain Refill

2. Remove the front bumper.

Front Bumper Remove

3. Loosen the clamp, and disconnect the hose of cooling pipeline from the front radiator.

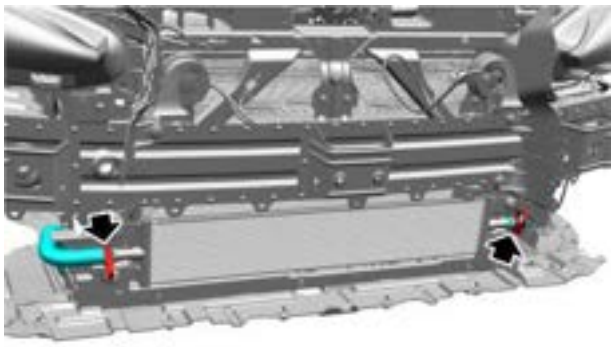

S3125010

4. Remove 4 bolts fixing the front radiator to the front-end module, and remove the front radiator.

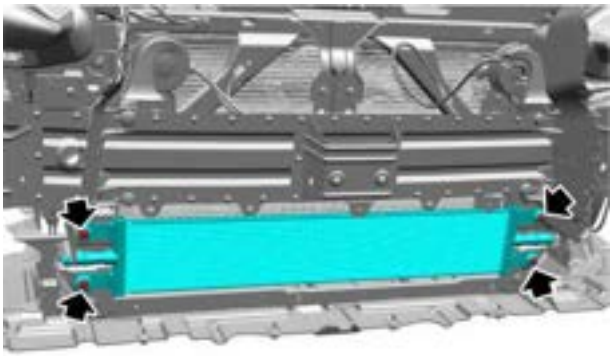

S3125011

Refit - Front

1. Fix the front radiator to the front-end module, fit 4 bolts, tighten them to **7-10Nm** , and check the torque.
2. Fix the hose of cooling pipeline to the front radiator and secure it with clamps.
3. Fit the front bumper.

Front Bumper Refit

4. Refill the coolant.

Coolant Drain - ENG Refill - ENG Drain Refill

Remove

1. Remove the front bumper.

☞ **Front Bumper Remove**

2. Loosen the clip, and remove the wind scooper.

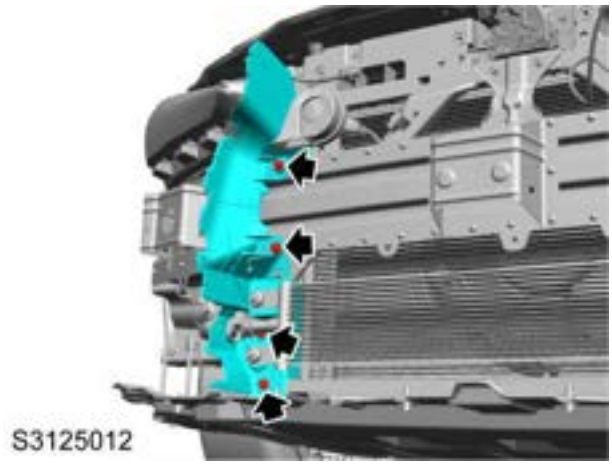

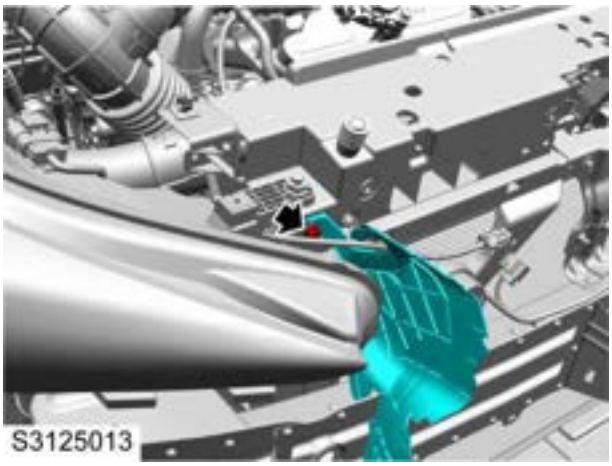

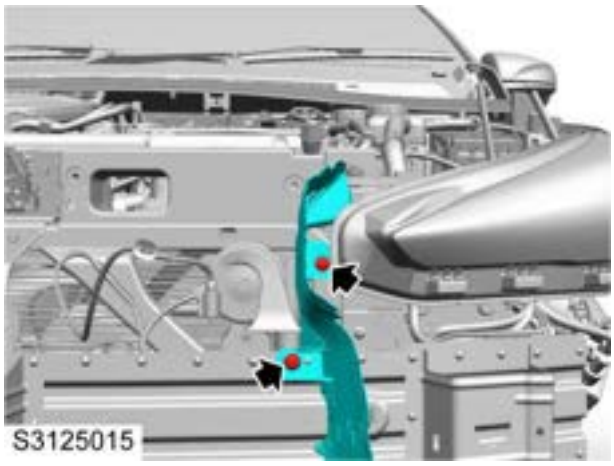

Refit

1. Fit the wind scooper and secure it with clips.
2. Fit the front bumper.

☞ **Front Bumper Refit**

Upper Shock Pad

Remove

1. Remove the front-end module.

☞ **Front-end Module Remove**

2. Remove the upper shock pad.

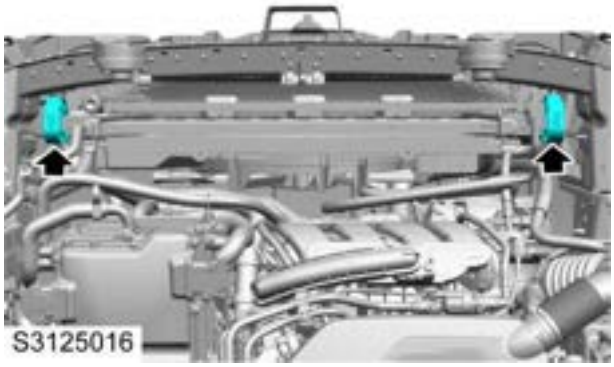

Refit

1. Fit the upper shock pad.
2. Fit the front-end module.

☞ **Front-end Module Refit**

Lower Shock Pad

Remove

1. Remove the front-end module.

Front-end Module Remove

2. Remove the lower shock pad.

Refit

1. Fit the lower shock pad.
2. Fit the front-end module.

Front-end Module Refit

Remove

1. Remove the front bumper assembly.

☞Front Bumper Assembly Remove

2. Disconnect the harness connector (1) of the cooling fan relay.
3. Remove 2 screws (2) fixing the cooling fan relay to the body, and remove the cooling fan relay.

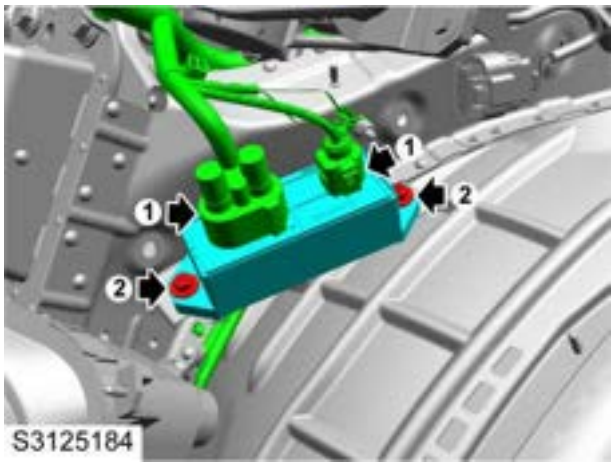

Refit

1. Fix the cooling fan relay to the body, fit and tighten 2 screws.
2. Connect the harness connector of the cooling fan relay.
3. Fit the front bumper assembly.

☞Front Bumper Assembly Refit

Engine Fuel System

Specification

Torque

Description	Value
Bolt-Fuel to body	22-28Nm
Bolt-Carbon Tank to Body	19-25Nm
Bolt-Supply tube assy to body	5-7Nm
Bolt-Fuel tank filling port to body	5-7Nm

Description and Operation

System Layout

Fuel System Layout

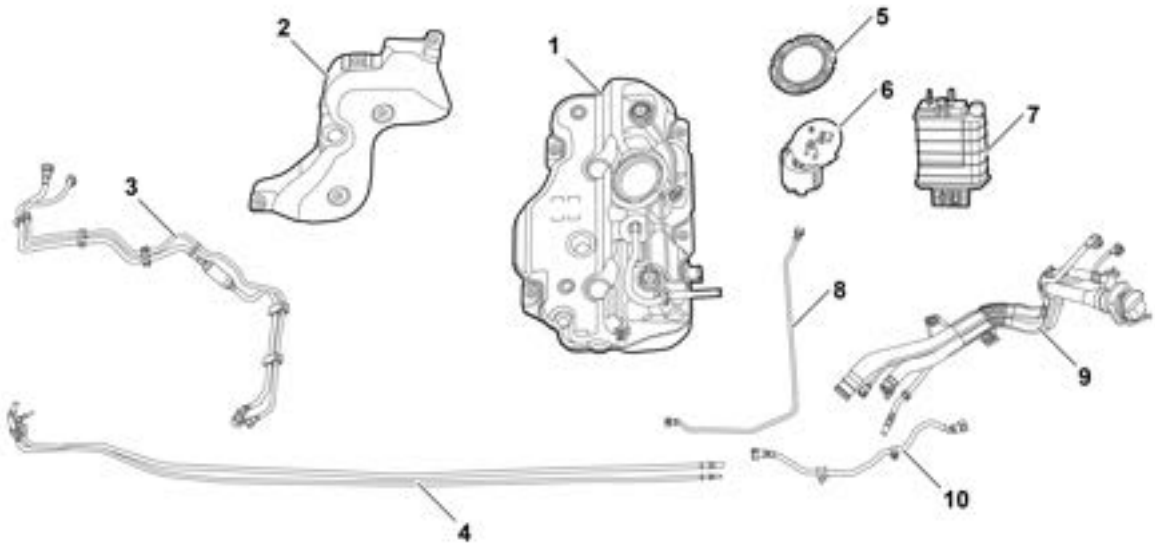

S1130067

1. Fuel Tank
2. Fuel Tank Heat Shield
3. Front Compartment Fuel Pipe Assembly
4. Underfloor Fuel Pipeline Assembly
5. Fuel Pump Lock Plate
6. Fuel Pump
7. Canister
8. Fuel Tank Outlet Pipe
9. Fuel Filler Pipe Assembly
10. Canister Desorption Pipe

Description

Fuel System

The fuel system consists of fuel tank, fuel pump, canister, underfloor fuel pipe and other parts. The fuel pump supplies fuel continuously after ignition, and it is integrated with a fuel level sensor, which is connected to the body harness. The fuel is drawn from the fuel tank by the fuel pump, and transmitted to the engine high pressure fuel pump/fuel rail via a separate fuel pipe after passing through the fuel filter integrated in the fuel pump.

Electric Fuel Pump

The electric fuel pump transfers the fuel from the fuel tank to the engine and provides sufficient fuel pressure. The fuel pump is placed in the fuel tank and immersed in the fuel, and uses the fuel for heat dissipation and lubrication. The battery supplies power to the electric fuel pump via fuel pump relay, which allows the electric fuel pump circuit to be closed only when the relay is energized, starts and the engine operates. When the engine stops running due to accident, the fuel pump will stop operating automatically

The electric fuel pump includes a level sensor connected in series with the instrument pack. The instrument pack shows the fuel in the fuel tank.

Fuel Evaporative Emission System

The function of fuel evaporative emission system is to prevent the fuel evaporative emissions from escaping into the air; the system consists of a canister filled with activated carbon particles, which is located in the rear left wheelhouse. The pipeline above the fuel tank connects the fuel tank to the canister. The canister can absorb hydrocarbon vapor in the fuel system, but the capacity is limited. There is also a pipeline connecting the canister to the intake manifold and inlet pipe respectively via the canister solenoid valve. When the engine operates, the fuel vapor absorbed by the canister will be drawn into the engine cylinders for consumption.

Service Guide

Fuel Pump

Remove

1. Release the fuel system pressure.

☞Fuel System Pressure Relief

Warning：Fuel vapour is highly flammable and in confined spaces is also explosive and toxic. Always have a fire extinguisher containing foam, CO2, gas or powder close at hand when handling or draining fuel.

2. Remove the fuel tank.

☞Fuel Tank Remove

3. Cover the surrounding areas with cloth to prevent overflow of fuel.
4. Disconnect the harness connector (1) of the fuel pump, and disconnect the quick connector (2) of the fuel pipe from the fuel pump.

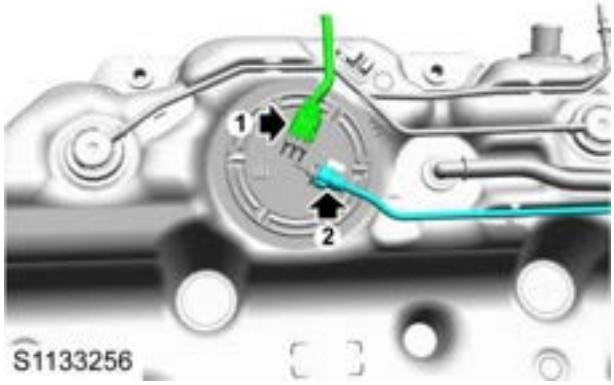

5.

Caution：Before disconnecting any part of the fuel system, it is imperative that all dust, dirt and debris is removed from around components to prevent ingress of foreign matter into fuel system.

Warning：The spilling of fuel is unavoidable during this operation. Ensure that all necessary precautions are taken to prevent fire and explosion.

6. Remove and discard the fuel pump lock ring with the special tool TCH00108 .

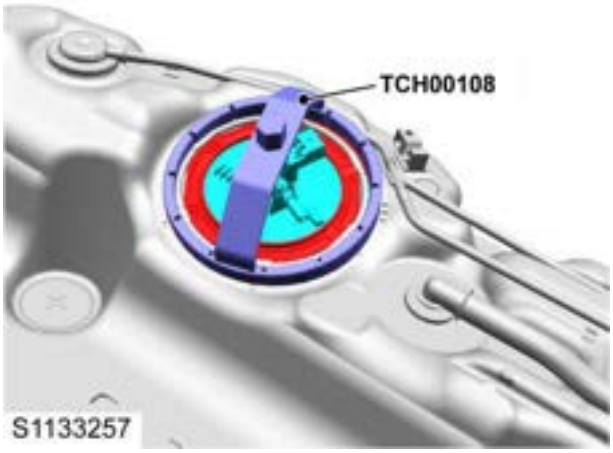

7. Take out the fuel pump with care and discard the seal.

Refit

1. Clean the fuel pump and its surroundings, and locate the fuel pump in the fuel tank.
2. Fit a new seal to the fuel tank and fit the fuel pump. Take care not to damage the seal.
3. Fit the new fuel pump lock plate with the special tool TCH00108 .

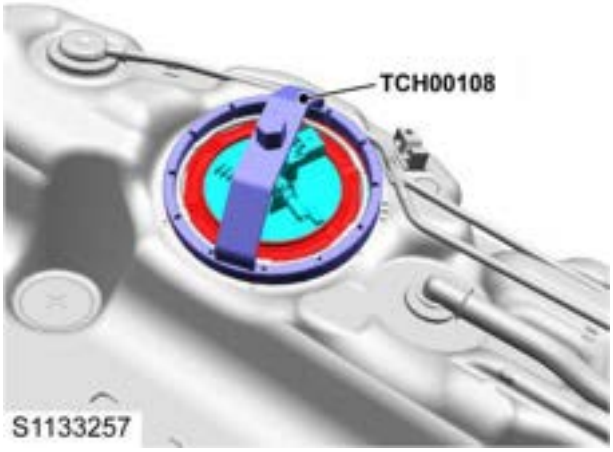

4. Connect the quick connector of the fuel pipe on the fuel pump.
5. Connect the harness connector of the fuel pump.
6. Take the cloth for absorbing spilled fuel away and dispose of it.
7. Fit the fuel tank.

☞Fuel Tank Refit

Fuel Tank

Remove

1. Drain the fuel tank.

☞ **Fuel Tank Drain and Refill**

2. Remove the left middle bottom deflector.

☞ **Bottom Deflector Remove**

3. Disconnect the harness connector (1) of the fuel tank, loosen the clamp, and disconnect the fuel filler hose from the fuel tank (2).
4. Loosen the clamp, disconnect the canister desorption pipe from the fuel filler pipe assembly (3), and disconnect the quick connector (4) from the fuel tank vent pipe to the fuel filler pipe assembly.

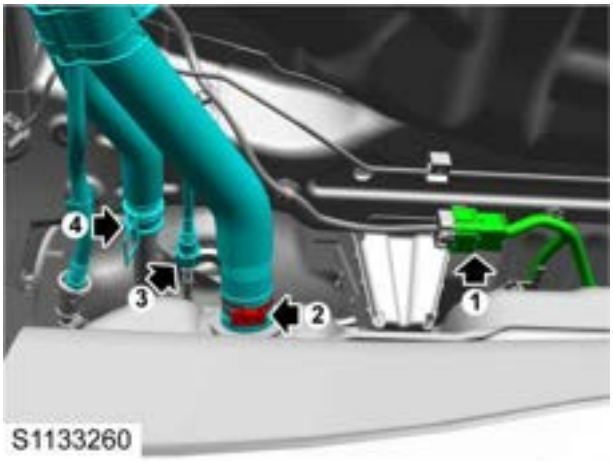

5. Disconnect the quick connector between the fuel supply pipe and the underfloor fuel inlet pipe.

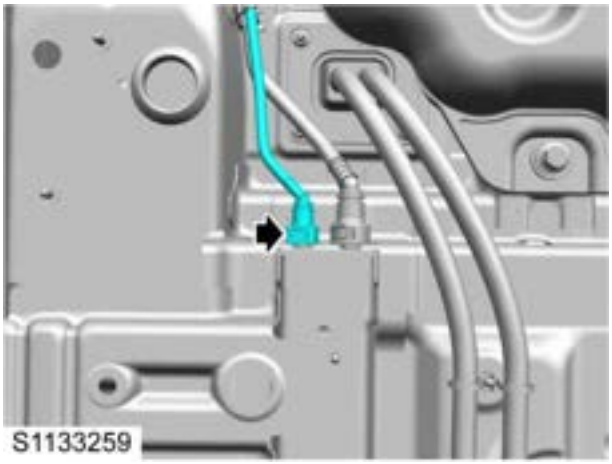

6. Remove 5 metal clips fixing the fuel tank guard plate to the fuel tank.

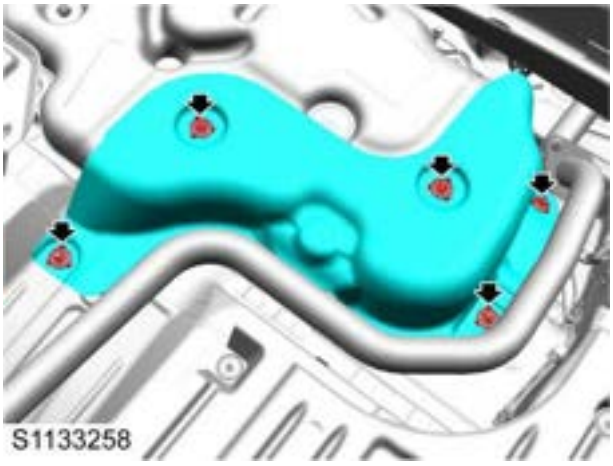

7. Support the fuel tank with the hydraulic lifter.
8. Remove 4 bolts fixing the fuel tank to the body, and lower to the appropriate height.

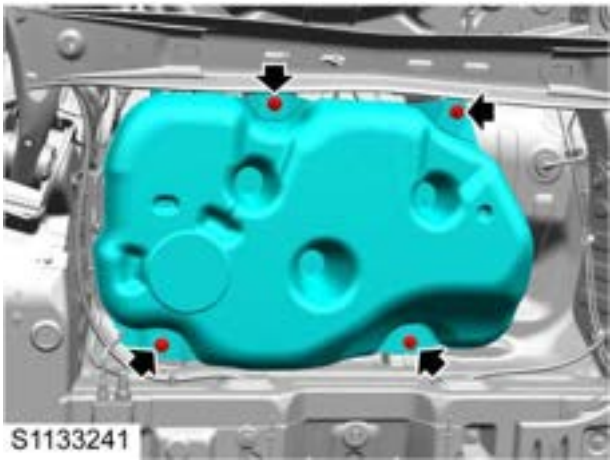

9. Disconnect the quick connector of the fuel pipe on the fuel pump, and remove the fuel supply pipe.

Refit

1. Fix the fuel supply pipe to the fuel tank.
2. Connect the quick connector of the fuel pipe on the fuel pump.
3. Lift the fuel tank to an appropriate position with the hydraulic lifting equipment and locate it properly.
4. Align the fuel tank with the body holes, fit 4 bolts, and tighten them to **22-28Nm** .

5. Lower the hydraulic lifter, and push it to the safety zone.
6. Fit 5 metal clips fixing the fuel tank guard plate to the fuel tank.
7. Connect the quick connector between the fuel supply pipe and the underfloor fuel inlet pipe.
8. Connect the canister desorption pipe to the fuel filler pipe assembly, and fasten it with clamps.
9. Connect the quick connector from the fuel tank vent pipe to the fuel filler pipe assembly.
10. Connect the fuel filler hose to the fuel tank, and fasten it with clamps.
11. Connect the harness connector of the fuel tank.
12. Fit the left middle bottom deflector.

☞ **Bottom Deflector Refit**

13. Refill the fuel.

Remove

1. Remove the left bottom deflector.

☞ Bottom Deflector Remove

2. Disconnect the quick connector (1) from the canister desorption pipe to the underfloor desorption pipe.
3. Disconnect the quick connector (2) from the canister desorption pipe to the fuel filler pipe assembly.

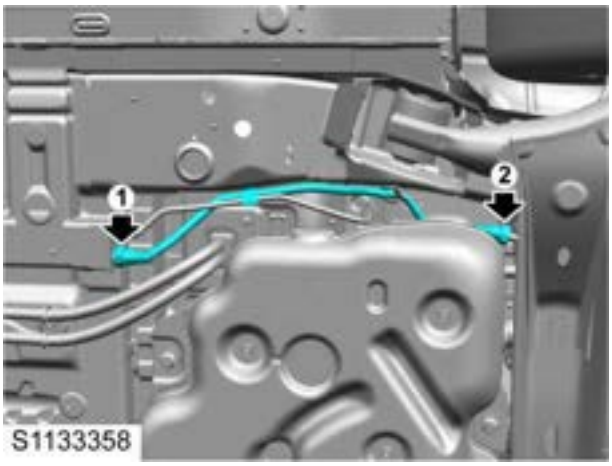

4. Disconnect the relevant clips, and remove the canister desorption pipe.

Refit

1. Locate the canister desorption pipe to the mounting position and fit the retaining clips.
2. Connect the quick connector between the canister desorption pipe and the fuel filler pipe assembly.
3. Connect the quick connector between the canister desorption pipe and the underfloor desorption pipe.
4. Fit the left bottom deflector.

☞ Bottom Deflector Refit

Canister

Remove

1. Disconnect the negative battery cable.
2. Remove the rear left wheelhouse liner.

☞**Rear Wheelhouse Liner Remove**

3. Disconnect 2 pipelines (1) from the canister, and remove 1 bolt (2) fixing the canister to the body.

Caution：Always fit plugs to open connections to prevent contamination.

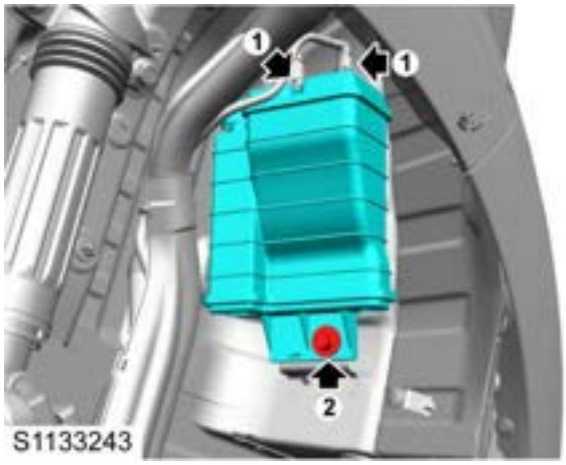

4. Remove the canister.

Refit

1. Clean the canister.
2. Locate the canister to the body, fit 1 bolt and tighten it to **19-25Nm** .
3. Connect 2 pipelines to the canister.
4. Fit the rear left wheelhouse liner.

☞**Rear Wheelhouse Liner Refit**

5. Connect the negative battery cable.

Underfloor Fuel Pipeline

Remove

1. Release the fuel system pressure.

☞Fuel System Pressure Relief

Warning：Fuel vapour is highly flammable and in confined spaces is also explosive and toxic. Always have a fire extinguisher containing foam, CO2, gas or powder close at hand when handling or draining fuel.

Warning：Depressurise the system before disconnecting any components. Fuel pressure will be present in the system even if the ignition has been switched off for some time.

2. Remove the left middle bottom deflector.

☞Bottom Deflector Remove

3. Disconnect the quick connector (1) from the canister desorption pipe to the underfloor canister desorption pipe, and disconnect the quick connector (2) from the fuel inlet pipe to the underfloor fuel inlet pipe.

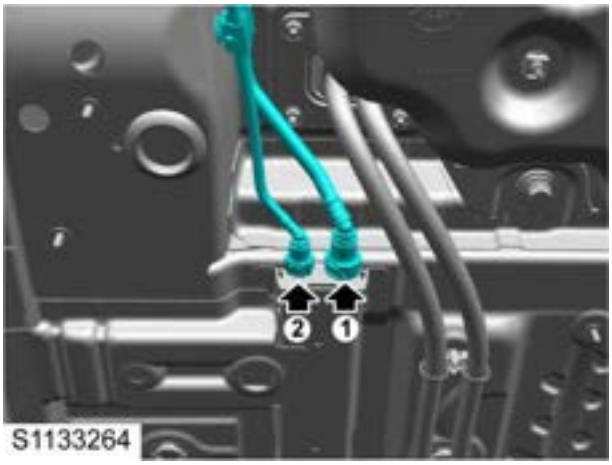

4. Pry off the cover plate, disengage the clips (1) fixing the underfloor fuel inlet pipe to the cover plate, and disengage the clips (2) fixing the underfloor canister desorption pipe to the cover plate.

5. Disconnect the quick connector (1) from the front compartment canister desorption pipe to the underfloor canister desorption pipe, and disconnect the quick connector (2) from the front compartment fuel inlet pipe to the underfloor fuel inlet pipe.

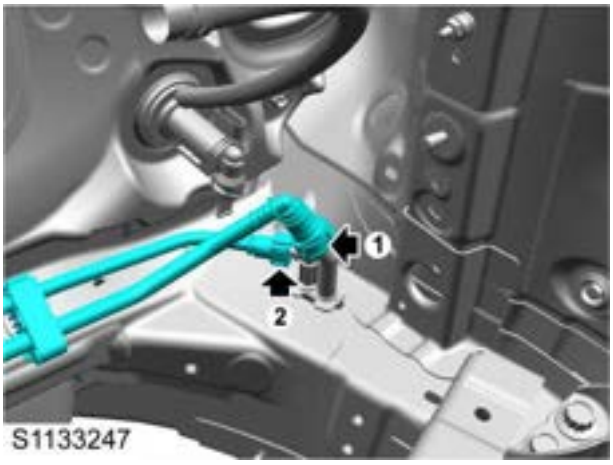

6. Pull out the underfloor fuel pipeline from the front compartment sheet metal mounting hole.

Refit

1. Pass the underfloor fuel pipeline through the front compartment sheet metal mounting hole, and ensure that it is fitted in place.
2. Connect the quick connector from the underfloor canister desorption pipe to the front compartment lower canister desorption pipe.
3. Connect the quick connector from the underfloor fuel inlet pipe to the front compartment fuel inlet pipe.
4. Fix the underfloor canister desorption pipe and the underfloor fuel inlet pipe to the cover plate, and fix the cover plate in place.
5. Connect the quick connector from the underfloor canister desorption pipe to the canister desorption pipe.
6. Connect the quick connector from the underfloor fuel inlet pipe to the fuel inlet pipe.
7. Fit the left middle bottom deflector.

☞Bottom Deflector Refit

Remove

1. Release the fuel system pressure.

☞ **Fuel System Pressure Relief**

2. Disconnect the quick connector (1) from the front compartment canister desorption pipe to the underfloor canister desorption pipe.
3. Disconnect the quick connector (2) from the front compartment fuel inlet pipe to the underfloor fuel inlet pipe.

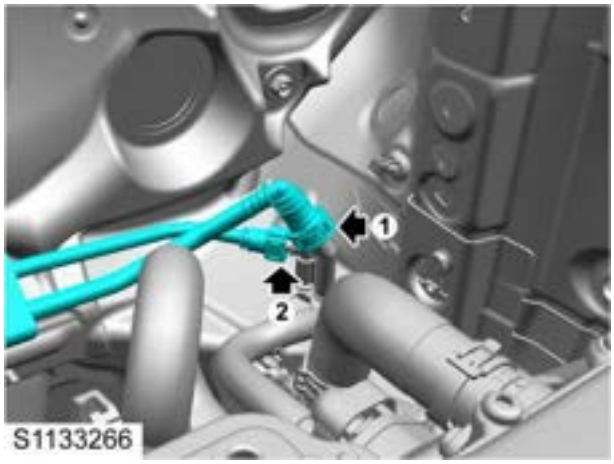

4. Disconnect the quick connector (1) between the front compartment canister desorption pipe and the canister solenoid valve, and loosen the clip.
5. Disconnect the quick connector (2) between the front compartment fuel inlet pipe and the fuel rail, and loosen the clip.

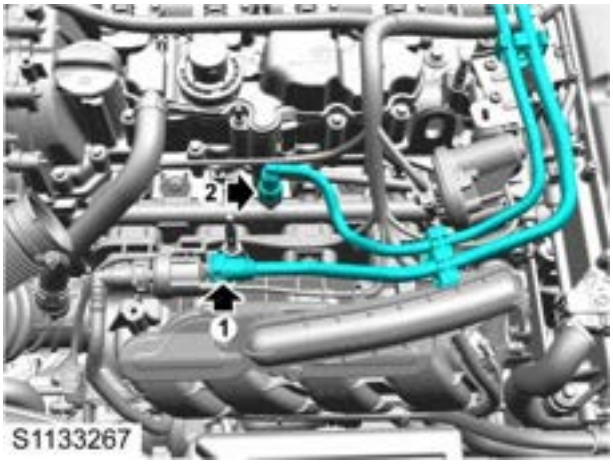

6. Remove the front compartment fuel pipeline.

Refit

1. Locate the front compartment fuel pipe to the clip on the body and fasten it.
2. Connect the quick connector between the front compartment fuel inlet pipe and the fuel rail, and fit the clips.
3. Connect the quick connector between the front compartment canister desorption pipe to the canister solenoid valve, and fit the clips.
4. Connect the quick connector between the front compartment fuel inlet pipe and the underfloor fuel inlet pipe.
5. Connect the quick connector between the front compartment canister desorption pipe and the underfloor canister desorption pipe.

Fuel Filler Pipe Assembly

Remove

1. Drain the fuel tank.

☞ Fuel Tank Drain and Refill

2. Open the fuel tank filler cap.
3. Remove 4 bolts fixing the fuel tank filler to the body.

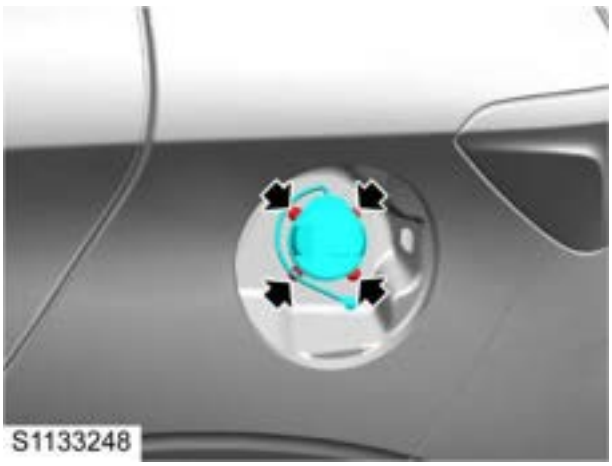

4. Remove the rear left wheel.

☞ Wheels Remove

5. Remove the rear left wheelhouse liner.

☞ Rear Wheelhouse Liner Remove

6. Raise the vehicle to the appropriate height.
7. Disconnect 2 breather pipes from the canister.

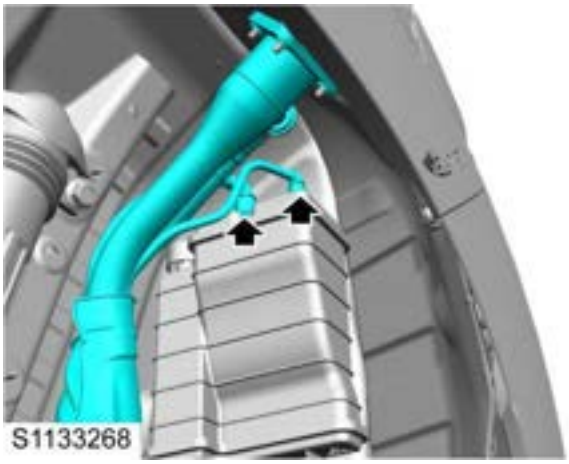

8. Remove 3 bolts fixing the fuel filler pipe assembly to the body.

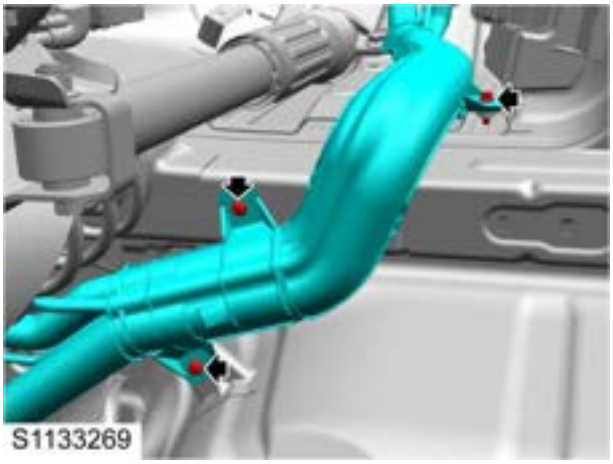

9. Disconnect the quick connector (1) between the fuel filler pipe assembly and the canister desorption pipe.
10. Loosen the clamp, and disconnect the fuel filler pipe assembly from the fuel tank hose (2).
11. Disconnect the quick connector (3) between the fuel filler pipe assembly and the fuel tank vent pipe.
12. Loosen the clamp, and disconnect the fuel filler pipe assembly from the fuel tank (4).

13. Remove the fuel filler pipe assembly.

Refit

1. Connect the fuel filler pipe to the fuel tank, and fasten it in place with clamps. If the connection between the fuel filler pipe and the fuel tank is damaged, please replace it.
2. Connect the quick connector from the fuel tank vent pipe to the fuel filler pipe assembly.
3. Connect the fuel filler pipe to the fuel tank hose, and fasten it with clamps.
4. Connect the quick connector from the canister desorption pipe to the fuel filler pipe assembly.
5. Locate the fuel filler pipe assembly to the body, fit 3 bolts and tighten them to **5-7Nm** .
6. Connect 2 breather pipes to the canister.
7. Lower the vehicle.
8. Fit the rear left wheelhouse liner assembly.

☞**Rear Wheelhouse Liner Assembly Refit**

9. Fit the rear left wheel.

☞**Wheels Refit**

10. Locate the fuel tank filler to the body, fit 4 bolts and tighten them to **5-7Nm** .
11. Screw the fuel tank filler cap.
12. Refill the fuel.

Fuel System - Pressure Release

Pressure Relief

1. Loosen the fuel filler cap to release the steam pressure in the fuel tank.

Warning : Fuel vapour is highly flammable and in confined spaces is also explosive and toxic. Always have a fire extinguisher containing foam, CO2, gas or powder close at hand when handling or draining fuel.

2. Remove the fuel pump fuse from the engine compartment fuse box.
3. Place the Start switch in "ON" position and keep the engine idling until it stops.
4. Place the Start switch in "OFF" position, restart the engine with start key and keep for 10s to confirm that the engine has no fuel.
5. Fix the fuel filler cap.

Pressure Testing

1. Place the absorbent cloth around the joint of the engine fuel rail and the front compartment fuel inlet pipe to collect the spilled fuel.

Warning：Fuel vapour is highly flammable and in confined spaces is also explosive and toxic. Always have a fire extinguisher containing foam, CO2, gas or powder close at hand when handling or draining fuel.

Warning：The spilling of fuel is unavoidable during this operation. Ensure that all necessary precautions are taken to prevent fire and explosion.

2. Disconnect the front compartment fuel inlet pipe from the fuel rail.

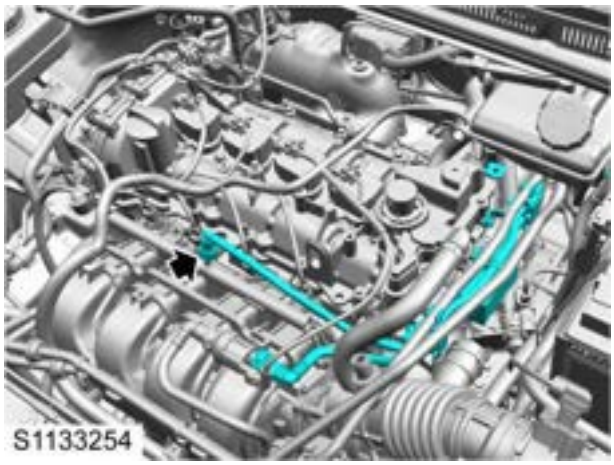

3. Respectively connect the connectors of the fuel rail and the front compartment fuel inlet pipe to the quick connectors.
4. Fix TCH00106 to T18002 .

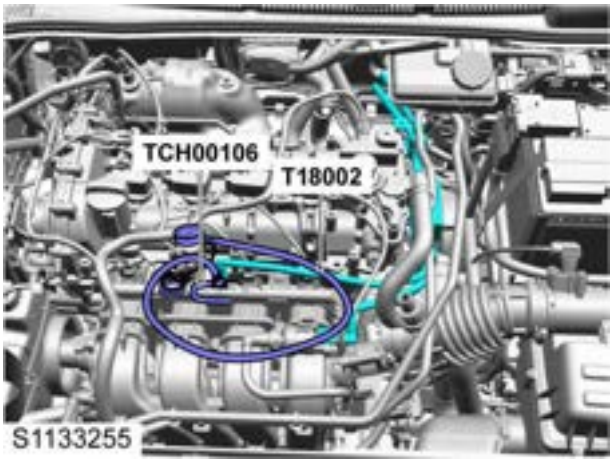

5. Start the engine to allow the fuel pump to work, observe the readings on the fuel pressure gauge within a minute; if the readings are in the range of 5.3-6 bar, it indicates that the fuel system is normal.
6. Stop the engine to stop the fuel pump; if the system pressure drops below 3 bar after 20 minutes, it indicates that there is something wrong with the system pressure maintaining, so check the pressure regulating valve of the fuel pump for normal operation.
7. Respectively disconnect the front compartment fuel inlet pipe from the fuel rail.
8. Drain the fuel remaining in the tool to the container.
9. Connecting the front compartment fuel inlet pipe to the fuel rail.

Fuel Tank - Drain
Drain and Refill

Warning :

Warning : Proper fuel recovery equipment must be used and necessary protective measures must be taken to prevent fire and explosion.

1. Open the fuel filler cap.
2. Use the fuel recovery device to drain the fuel from the fuel tank into a sealed container.

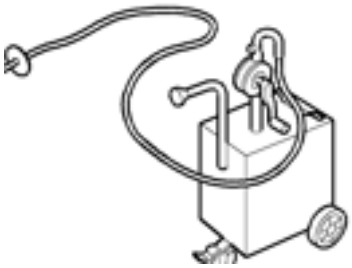

3. The connection and safe use of the fuel recovery device shall comply with the manufacturer's instructions.
4. Fill the fuel tank.

Special Tool Summary Sheet

Special Tools

Tool Number	Description	Picture
TCH00108	Wrench fuel tank lock ring Wrench fuel tank lock ring	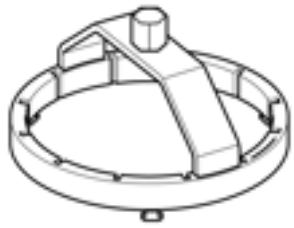
TCH00106	Fuel Pressure Gauge T-pipe	
T18002	Fuel pressure test equipment	

Engine Control System GS62H

Specification

Torque

Parameters

Description and Operation

System Layout

System Control Diagram

Description

Detailed Information List of Component Pins

Service Guide

Hot Film Air Mass Meter GS62H

Remove

Refit

Fuel Rail GS62H
Remove
Refit

Fuel injectors-GS62H
Remove
Refit

Spark Plug GS62H
Remove
Refit

Engine Control Module (ECM)GS62H
Remove
Refit

Ignition Coil GS62H
Remove
Refit

Crankshaft Position Sensor GS62H
Remove
Refit

Engine Coolant Temperature Sensor GS62H
Remove
Refit

Remove
Refit

Camshaft Position Sensor GS62H
Remove
Refit

Remove
Refit

Camshaft Phase Adjustment Solenoid Valve
GS62H
Remove
Refit

Remove
Refit

Remove
Refit

Front Oxygen Sensor GS62H
Remove
Refit

Rear Oxygen Sensor GS62H
Remove
Refit

Canister Solenoid Valve GS62H
Remove
Refit

Remove
Refit

Special Tool Summary Sheet

Special Tools

Engine Intake/Exhaust System GS62H

Specification

Torque

Description and Operation

System Layout

Description

Operation

Service Guide

Remove
Refit

Remove
Refit

Remove
Refit

Remove
Refit

Remove
Refit

Electronic Throttle GS62H
Remove
Refit

Remove
Refit

Remove
Refit

Remove
Refit

Remove
Refit

Middle Exhaust Pipe GS62H
Remove
Refit

Heat Shield - Rear Muffler Assembly GS62H
Remove
Refit

Heat Shield - Exhaust Passage GS62H
Remove
Refit

Exhaust Manifold GS62H
Remove
Refit

EGR Module GS62H
Remove
Refit

EGR Module Outlet Pipe GS62H
Remove
Refit

EGR Cooler Water Inlet Pipe GS62H

Remove

Refit

Remove
Refit

Remove
Refit

Shift Manipulation Control System-HT11

Specification

Torque

Description	Value
Screw-Shift Control Mechanism to Central Console	5-7Nm

Description and Operation

System Layout

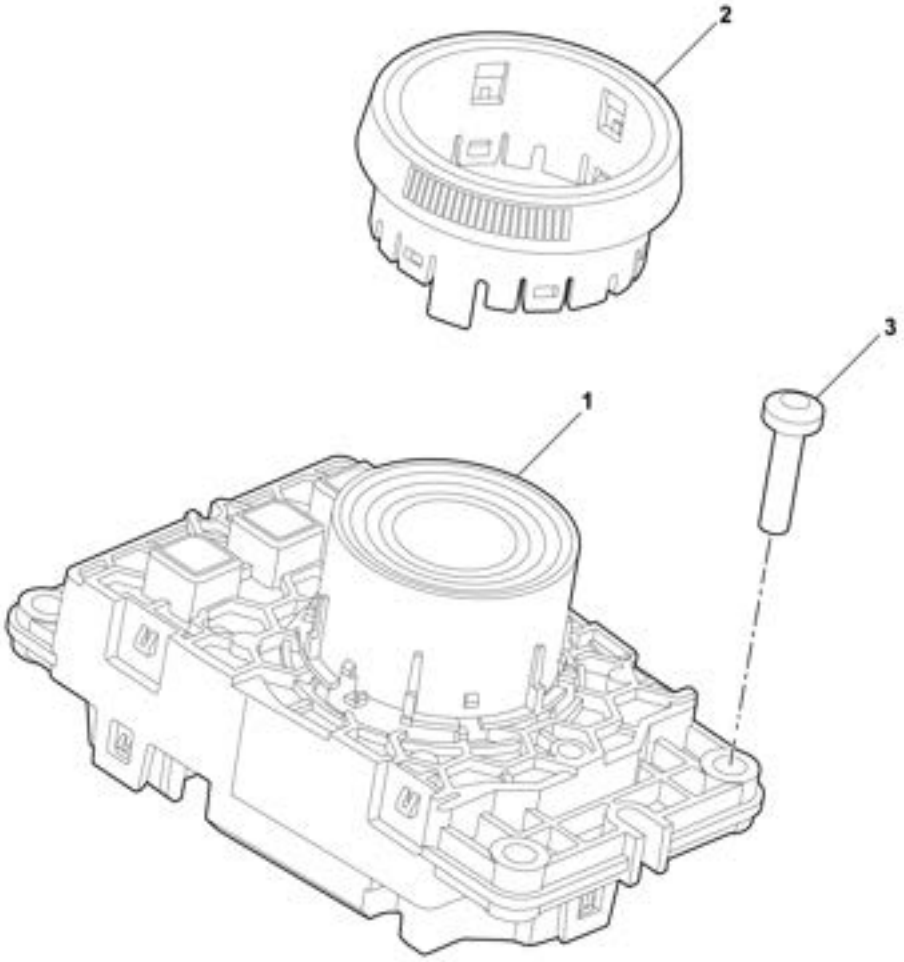

1. Gear Shift Control Mechanism
2. Shifter Knob Bezel
3. Screw - Gear Shift Control Mechanism

System Control Diagram

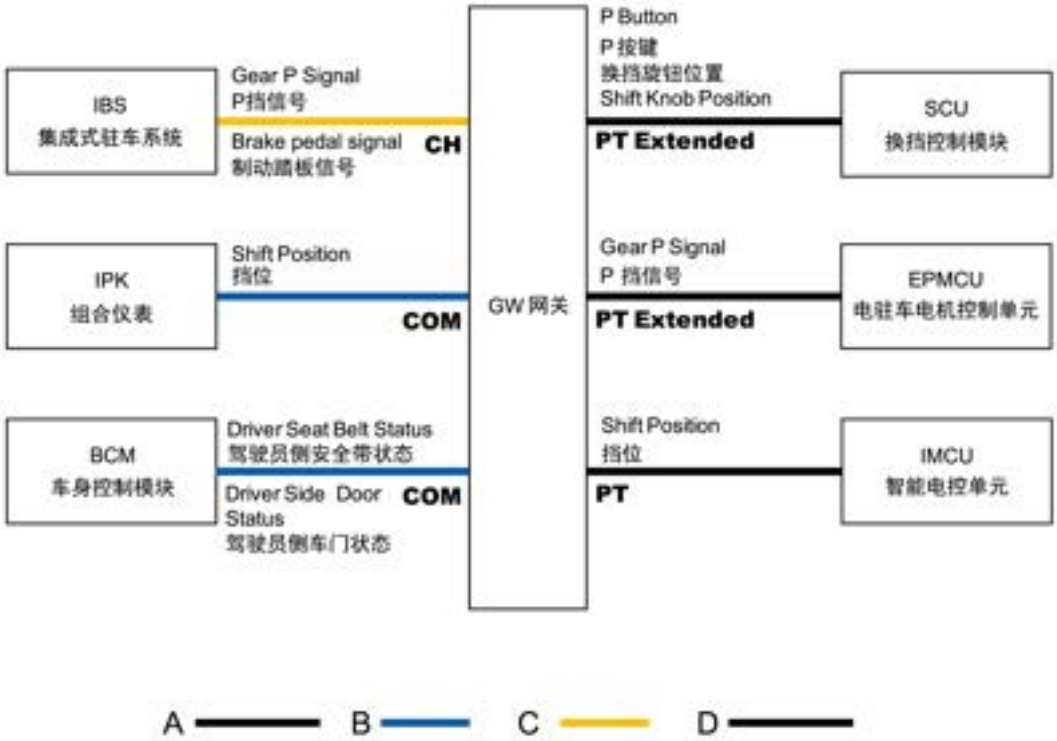

S1211106

A = Power HSCAN Bus; B = ComfortCAN Bus; C = Chassis HSCAN Bus; D = Powertrain ExtensionCAN Bus

Description

Overview

Function of gear shift control mechanism:

1. Collect current gear information
2. Output shift position signal

The gear shift control mechanism exchanges information with other external ECUs via the Power ExtensionCAN bus, mainly the intelligent motor control unit (IMCU) and the electric parking motor control unit (EPMCU) integrated in the electric drive unit. The R, N and D gear information is obtained by reading the signals from the gear position sensor in the gear shift control mechanism, while the P gear position signal can be triggered by pressing the P gear button on the gear shift control mechanism.

The collected R, N and D position information is sent to the IMCU via the Power ExtensionCAN bus; the P gear position information is sent to the EPMCU via the Power ExtensionCAN bus.

Gear Shift Control Mechanism

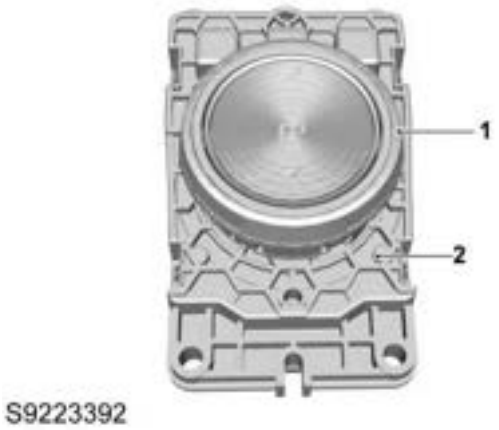

The gear shift control mechanism integrates a shifter control unit (SCU) and a P gear button, which is fixed on the centre console by bolts.

1. Shifter Knob Bezel
2. Gear Shift Control Mechanism

Operation

Gear Signal Collection

The chip on theSCU circuit board senses gear information, which contains a Hall rotation angle position sensor. When the knob is rotated, the sensor in the chip senses the angle position of the shift lever to determine the R, N, and D positions.

Service Guide

Gear Shift Control Mechanism Assembly

Remove

1. Disconnect the negative battery cable.
2. Remove the shifter knob bezel.

3. Remove the gear panel.

4. Remove 4 screws fixing the gear shift control mechanism to the centre console.

5. Disconnect the harness from the gear shift control mechanism.

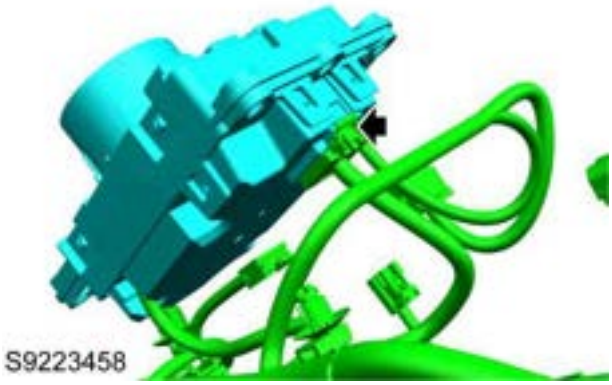

Refit

1. Connect the harness to the gear shift control mechanism.
2. Fit 4 screws fixing the gear shift control mechanism to the centre console, tighten them to **5-7Nm** , and check the torque.
3. Fit the gear panel.
4. Fit the shifter knob bezel.
5. Connect the negative battery cable.
6. Connect the scan tool and access the SIPS.
7. Select SIPS-Programming and Coding-SCU-Replacement, and follow the on-screen instructions.

Electric Drive Transmission-HT11

Specification

Torque

Description	Value
Transmission Drain Plug	13-17Nm
Transmission Refueling Plug	12-18Nm
Bolt-Electronic Transmission to Engine	55-65Nm
Bolt-Rotational End Cover to Shell	4.5-6.5Nm
Bolt-Earthing Wire to Shell	7.5-10.5Nm
Bolt-Electronic Oil Pump to Shell	9-11Nm
Bolt-Valve to Shell	7.5-10.5Nm
Bolt-Through-cylinder Plug-in to Shell	7.5-10.5Nm
Bolt-Suction And Filtration to Shell	8-12Nm
Bolt-Pressure Filtration to Shell	7.5-10.5Nm
Bolt- PEU to Shell	33-39Nm
Bolt-PEU High Voltage Line to Shell	21.5-28.5Nm
Bolt-High Voltage Line Cover Plate to Shell	4.5-6.5Nm
Bolt-Oil Cooler to Shell	7.5-10.5Nm
Bolt-Oil Pan to Shell	7.5-10.5Nm
Bolt-Parking Mechanism to Shell	7.5-10.5Nm
Bolt-Parking Position Sensor to Transmission	4.2-5.2Nm
Bolt-Input Shaft Speed Sensor to Shell	7.5-10.5Nm
Oil Pressure Sensor	9-11Nm

Parameters

Item		Specification
Three-phase Current	Continuous Current	TM:160A GM:150A
	Peak Current@20s	TM:400A GM:330A
DC Bus Voltage	Minimum DC bus voltage when derating is permitted	240V
	Minimum DC bus voltage when derating is not permitted	260V
	DC Bus Voltage Rating	353V
	Maximum DC bus voltage when derating is not permitted	403V
	Maximum DC bus voltage when derating is permitted	415V
	Threshold Value of Bus Voltage Software Overvoltage Failure	430V
	Threshold Value of Bus Voltage Software Undervoltage Failure	192V

Motor Temperature	Threshold Value of Motor Stator Over Temperature Derating Initiation	TM:155℃ GM:155℃
	Motor Stator Over Temperature Derating to Threshold Value of 0	TM:165℃ GM:165℃
	Threshold Value of Motor Stator Over Temperature Protection	TM:170℃ GM:170℃
KL30 Low-voltage Power Supply	KL30 Undervoltage Point of Software Settings	9V
	Threshold Value for Restoration of KL30 Undervoltage Point	9.5V
	KL30 Overvoltage Point of Software Settings	16V
	Threshold Value for Restoration of KL30 Overvoltage Point	15.5V
Motor Parameters	Motor Manufacturer	Founder Motor
	Number of Pole-pairs	TM:4Pair GM:4Pair
	Continuous Torque	TM:75N·m GM:60N·m
	Continuous Power	TM:35kW GM:35kW
	Peak Torque	TM:250N·m GM:140N·m
	Peak Power	TM:80kW GM:50kW
	Rated Speed	TM:4456.7rpm GM:557038rpm
	Max. Speed	TM:13000rpm GM:13000rpm
	Vehicle running in the forward direction, as viewed from the output shaft end of the fake housing motor	TM:clockwise GM:clockwise
	Maximum Motor Speed Limit	TM:13500rpm GM:13500rpm
	Minimum Motor Speed Limit	TM:-13500rpm GM:-2500rpm
	Speed Threshold Value of Motor Maximum Overspeed Failure	TM:15600rpm GM:15600rpm
	Speed Threshold Value of Motor Minimum Overspeed Failure	TM:-15600rpm GM:-3500rpm
	Motor Maximum Feedback Power	TM:80kW GM:50kW
P-PARK Parameters	Duty Ratio of Fork Position Entering P Position Sensor	(26± 4) %
	Duty Ratio of Fork Position Entering NP Position Sensor	(74± 4) %

Description and Operation

System Layout

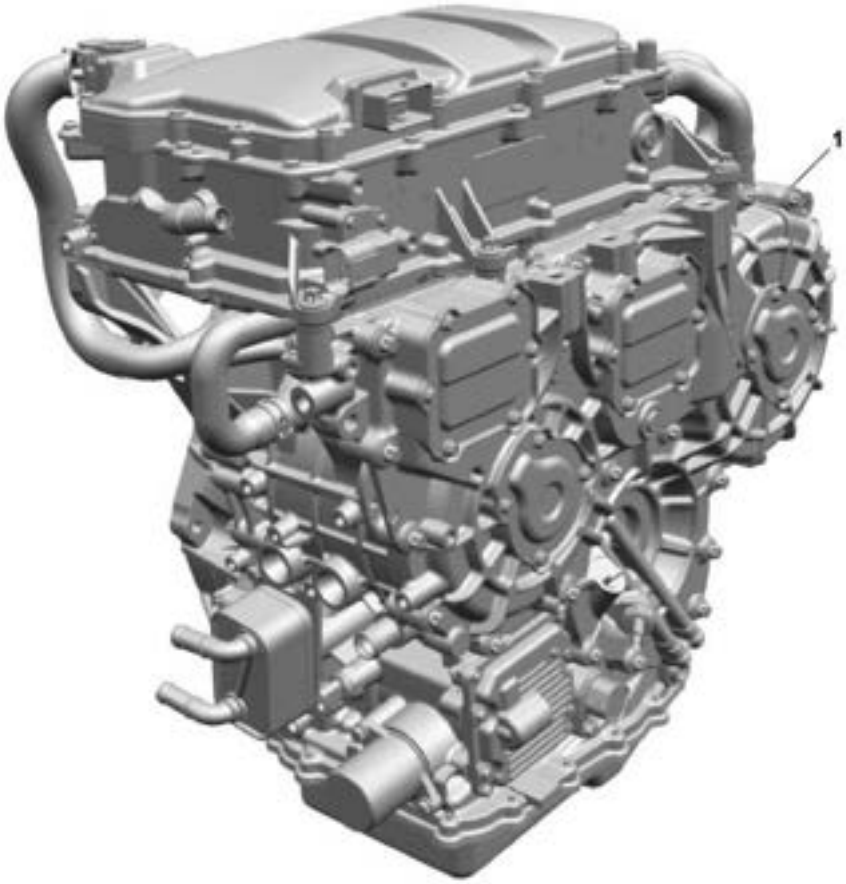

S1210254

1. Electric Drive Unit Assembly

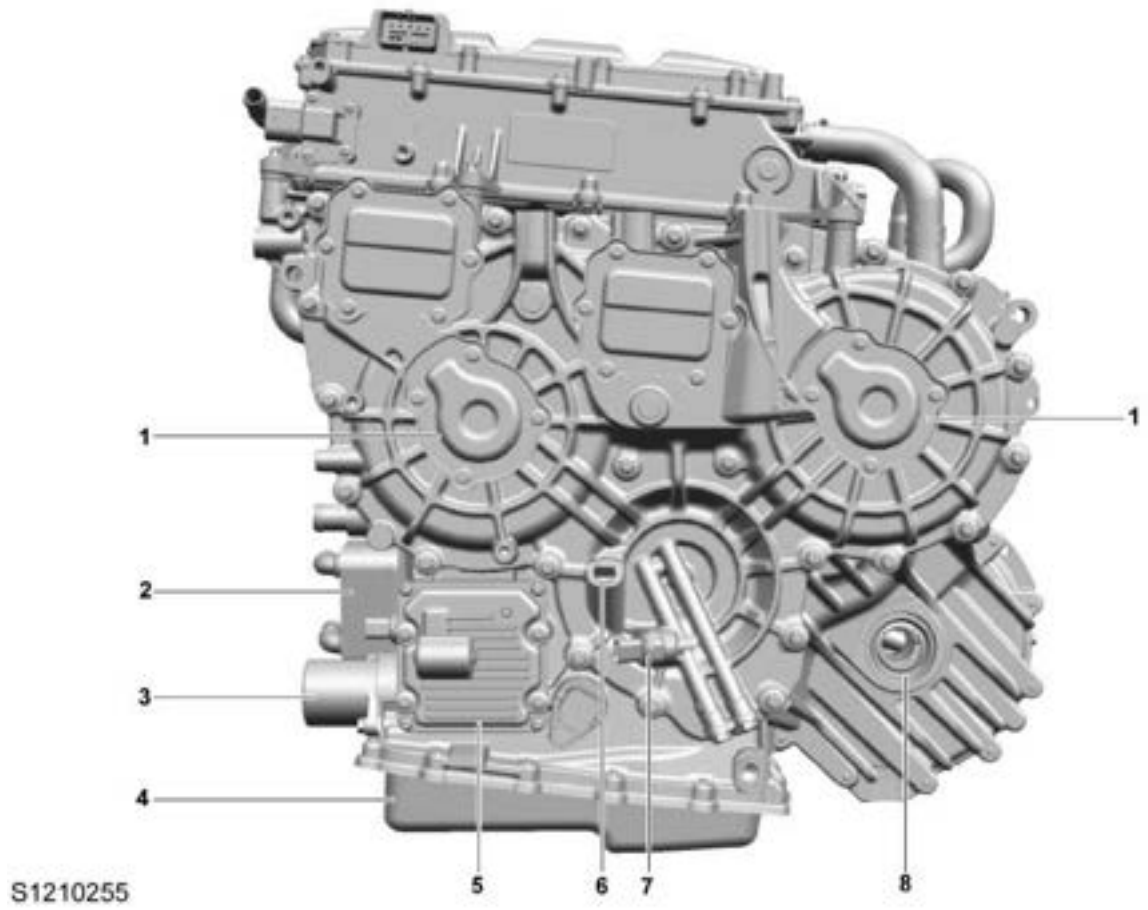

1. Motor Resolver Cover Plate
2. Oil Cooler
3. Pressure Filter
4. Oil Pan
5. Electronic Oil Pump
6. Oil Filler Plug
7. Oil Pressure Sensor
8. Differential Oil Seal

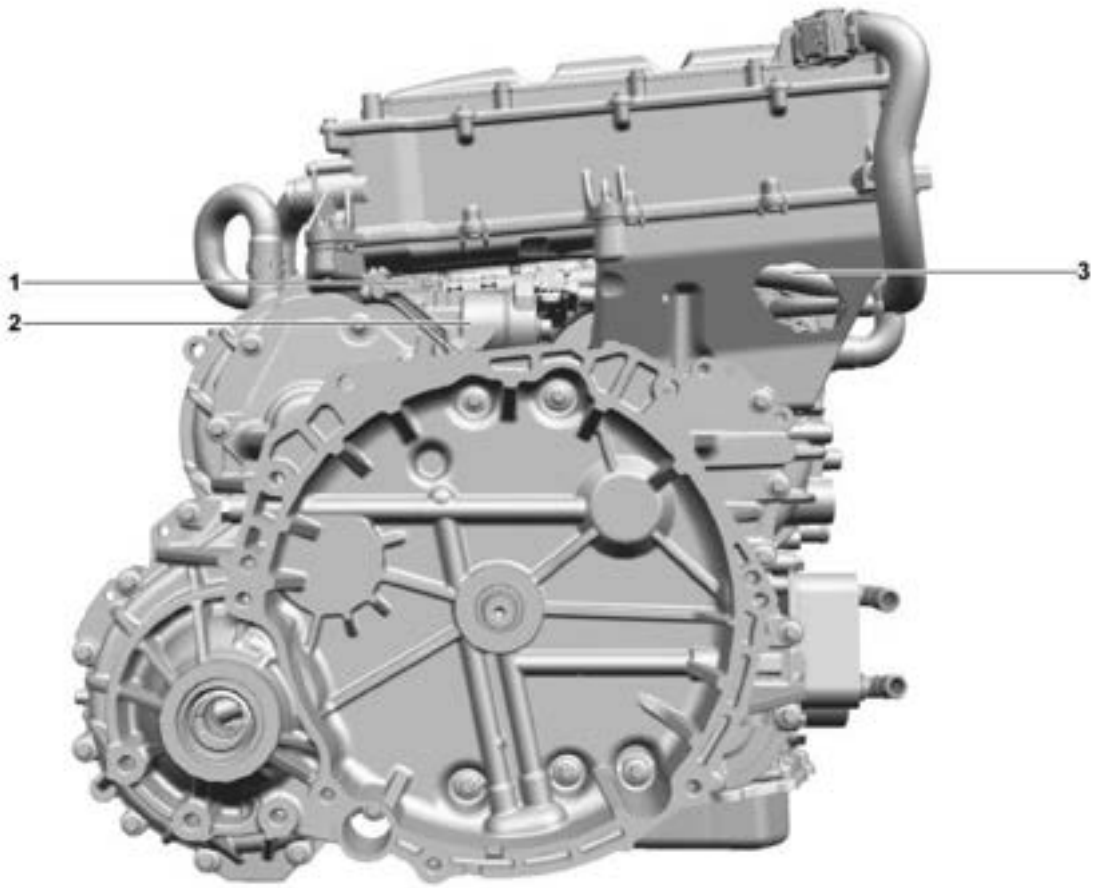

S1210256

1. Parking Position Sensor
2. Parking Mechanism
3. Exterior LV Harness

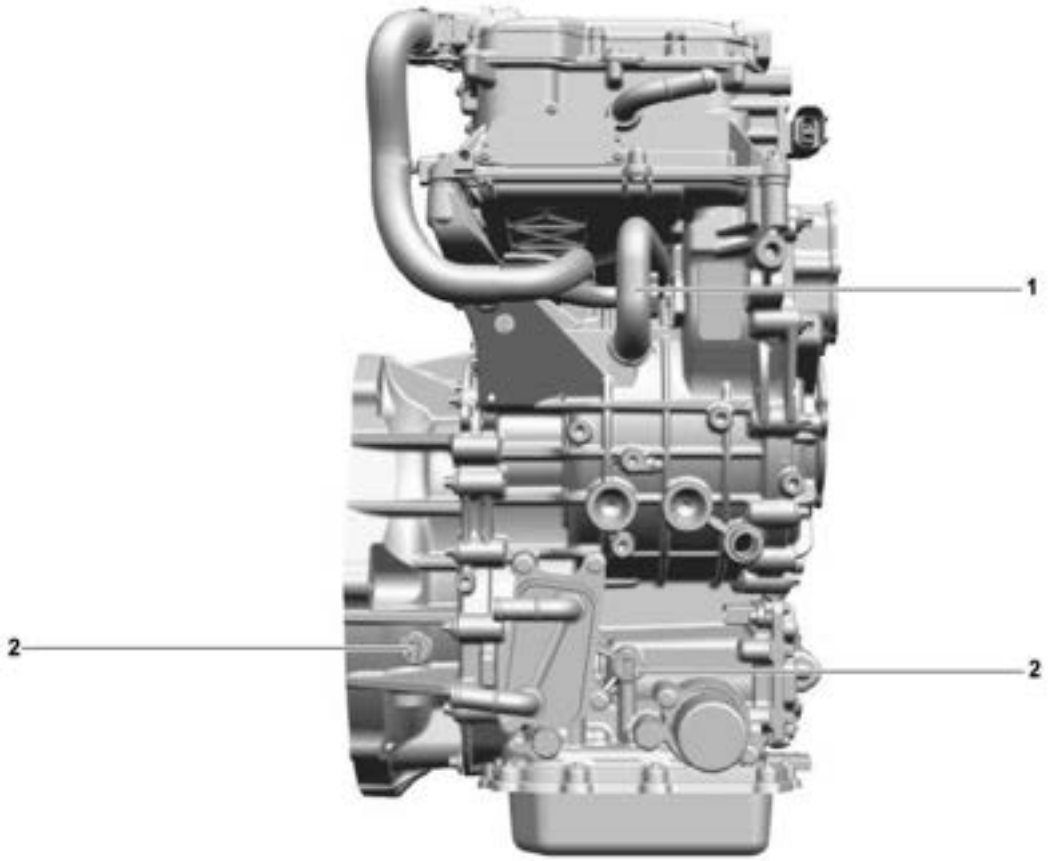

S1210257

1. Cooling Water Pipe
2. Oil Pressure Sensor

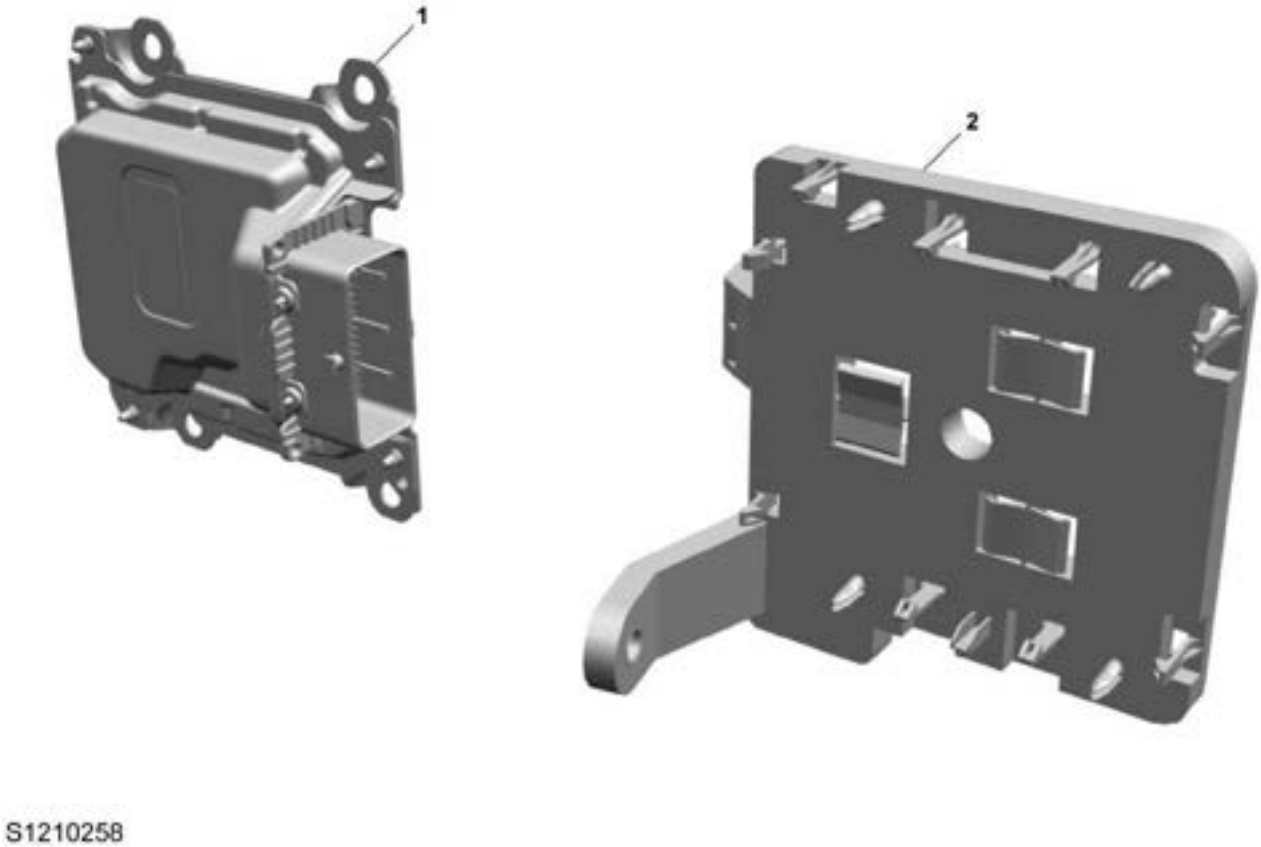

1. Transmission Control Module
2. Transmission Control Module Bracket

Description

HT11 electric drive unit integrates P1 motor, P3 motor, PEU, gear shaft, electronic oil pump, valve body, sensor and other major components.

Electronic Oil Pump

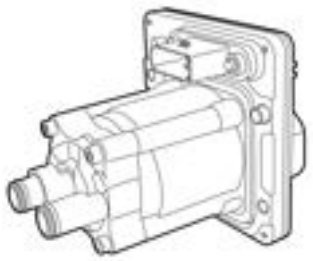

S1215458

HT11 is equipped with an electronic oil pump, which is fitted under the front housing of the transmission. In EV mode, the electronic oil pump acts as an auxiliary cooling and lubricating oil pump, providing B2 brake pre-tightening, planet row cooling and lubrication functions.

The inside of the electronic oil pump includes the oil pump, motor, and controller.

The body of the electronic oil pump is fixed to the housing by four M6 bolts.

Input Shaft Speed Sensor

S1215478

The input shaft speed sensor operates based on the Hall principle, and it determines the input speed of the transmission by detecting the signal wheel speed on the input shaft planetary carrier.

The speed sensor used on HT11 is mounted on the main housing for measuring the speed of input shaft. As a hall-effect sensor, the speed sensor will generate a series of pulse signals when the target wheel starts rotating. The number of pulses will increase with the increase of vehicle speed, and the pulse signal frequency will increase with the increase of monitoring component speed. However, the duty ratio will remain constant under any speed.

2 wires of the speed sensor are connected with TCU, among them, one is the power wire, the other is the wire for pulse signal to ground, its frequency will increase as the speed of the corresponding transmission component increases, and TCU measures the input speed of hybrid transmission based on this pulse signal.

Pressure Sensor

HT11 uses three pressure sensors mounted on the transmission housing to monitor the oil pressure on the C1 and C2 clutches (0 to 20bar) and the main oil circuit (0 to 30bar).

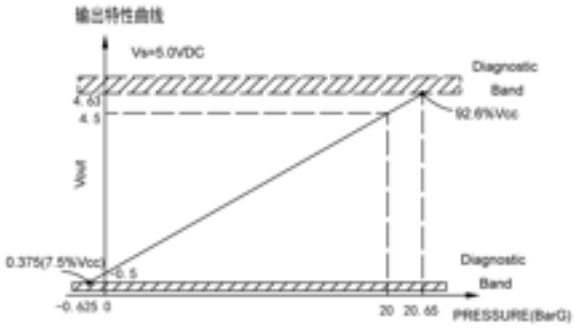

S1215479

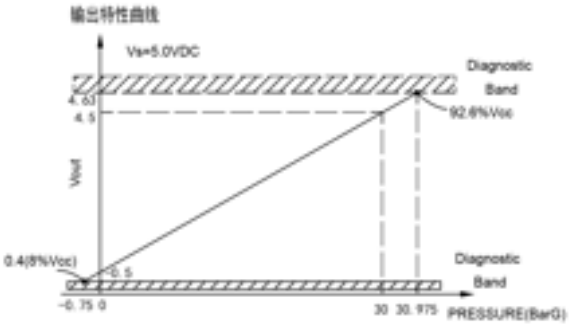

S1215480

The pressure sensor adopts the principle of ceramic capacitive pressure sensing, where the change in distance between the ceramic diaphragm under pressure and the substrate causes a change in the measured capacitance value. When the oil pressure changes, the deformation of ceramic diaphragm will make voltage signal generated by the sensor increase along with the increased oil pressure, and vice visa.

Temperature Sensor

The fluid temperature sensor used on HT11 is mounted on the valve body assembly inside the hybrid transmission for monitoring the fluid temperature of transmission.

The inside of the temperature sensor is PTC thermistor which presents the positive temperature coefficient characteristics, that is, the higher the oil temperature, the greater the resistance, or vice versa.

T (°C)	R-MIN (ohms)	T-TYP (ohms)	R-MAX (ohms)
-50	801.36	803.06	804.75
-40	841.08	842.71	844.33
-30	880.69	882.22	883.75
-20	920.18	921.5	923.02
-10	959.56	960.86	962.15
0	998.85	1000	1001.16
10	1037.63	1039.03	1040.43
20	1076.28	1077.94	1079.5
30	1114.8	1116.73	1118.66
40	1153.18	1155.41	1157.63
50	1191.44	1193.97	1196.5
60	1229.57	1232.42	1235.27
70	1267.57	1270.75	1273.93
80	1305.44	1308.97	1312.5
90	1343.18	1347.07	1350.96
100	1380.79	1385.055	1389.32
110	1418.27	1422.925	1427.58
120	1455.62	1460.68	1465.74
130	1492.84	1498.32	1503.8
140	1529.93	1535.84	1541.76
150	1566.89	1573.25	1579.61

Gear Shaft System

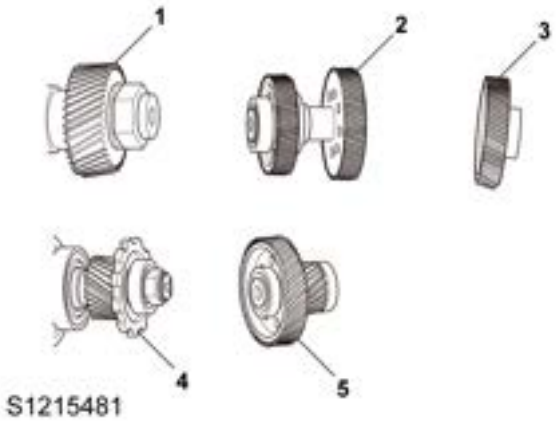

1. P1 motor gear: fitted on the P3 motor shaft by splines, transferring torque to the P1 motor and charging the P1 motor.
2. P1 motor idler shaft assembly: supported by bearings on the transmission housing, transferring the engine torque to P1 motor gear.
3. Gear ring output gear: fitted on the planet row system by splines, transferring torque to the Counter shaft assembly.
4. P3 motor gear: fitted on the P3 motor shaft by splines, transferring torque to the Counter shaft assembly.
5. Counter shaft assembly: supported by bearings on the transmission housing, transferring the torque to differential assembly.

Differential fixes the main reduction driven gear to the differential housing with bolts, and differential housing supports the planetary shaft, planetary gear and axle shaft gear. The differential assembly is supported by bearings in the transmission housing. The differential allows the wheels on both sides to rotate at different speeds when the output torques are the same. The pinion integrated with the output shaft is engaged with the main reduction driven gear of the differential assembly. When the vehicle is moving in a straight line, torque is transmitted to the wheels through the differential, and at this time, the planetary gears do not rotate on their own. When a vehicle turns, there is a phenomenon of dragging or slipping on the outer wheel and a phenomenon of slipping on the inner wheel. This results in two additional forces in opposite directions on two driving wheels. According to the "principle of minimum energy consumption," this inevitably leads to different speeds of two wheels, thus disrupting the balance among the three elements. This speed difference is reflected through the axle shafts to the axle shaft gears, forcing the planetary gears to rotate on their own. As a result, the speed of the outer axle shaft increases while the speed of the inner axle shaft decreases, achieving a difference in wheel speeds on both sides and improving the vehicle's maneuverability.

Valve Body Assembly

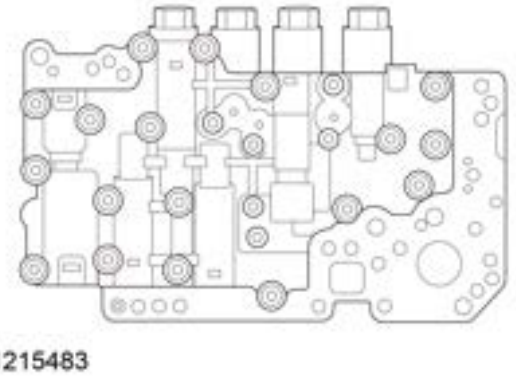

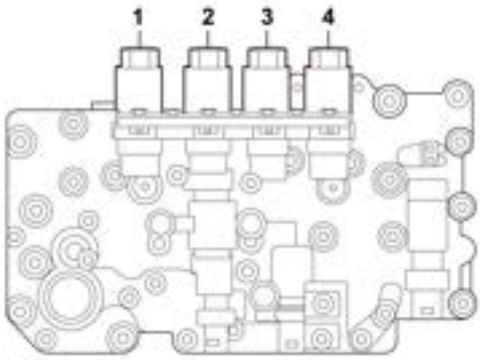

S1215484

1. Main Oil Circuit Pressure Regulating Solenoid Valve
2. C1 Clutch Pressure Regulating Solenoid Valve
3. B2 Brake Pressure Regulating Solenoid Valve
4. C2 Clutch Pressure Regulating Solenoid Valve

The valve body assembly is mainly composed of a solenoid valve, a solenoid valve plate, a mechanical valve plate, a separator and other components. Its main functions are:

- To control the engagement and disengagement of clutch to achieve gear switching
- Distribution and control of lubrication cooling flow of gear, bearing, planet row and other parts

Filter

S1215485

The suction filter is located at the bottom of the oil pan and has two oil outlets, one through mechanical pump and one through electronic pump; it is secured to the valve body by a bolt. The suction filter mainly consists of upper and lower covers and filter paper. Under the suction force of the oil pump, oil enters into the oil pump through the filter paper and rough filtration of oil entering the hydraulic system is completed in this process.

S1215486

The pressure filter is mainly composed of upper and lower covers, centre pipe, filter element, bypass valve, etc.; it is fitted on the housing, located in the cooling lubricating oil circuit, as the secondary filtration of the whole hydraulic system, and fine filtration for the oil that enters into the cooling lubricating oil circuit to ensure the cleanliness of the oil.

Clutch

The clutch system of HT11 is composed of C1 clutch, C2 clutch and B2 clutch.

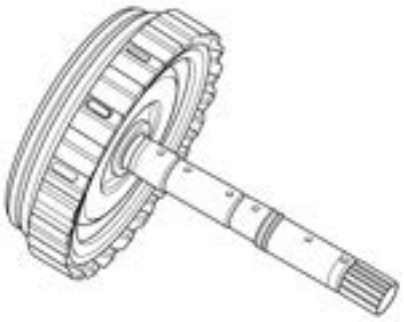

S1215487

- C1 Clutch Assembly

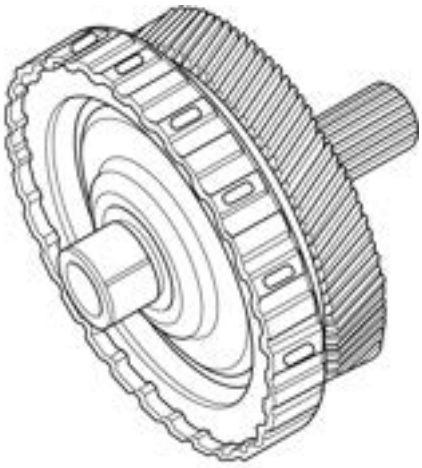

S1215488

- C2 Clutch Assembly

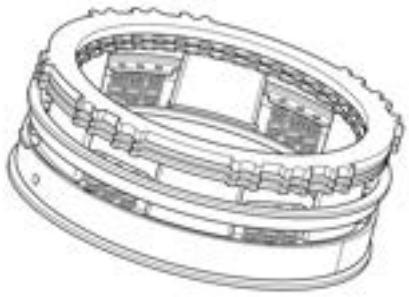

S1215489

- B2 Clutch Assembly

The outer spline of C1 clutch hub is connected with the inner spline of C1 active clutch assembly friction plate. The input shaft of the active clutch assembly is designed with oil holes to supply lubricating oil to the entire planet row. The C2 clutch assembly consists of an active clutch assembly and a C2 clutch hub. The outer spline of C2 clutch hub is connected with the inner spline of C2 active clutch assembly friction plate. The input shaft of the active clutch assembly is welded with a generator gear, which is connected to the generator P1. In the process of engine rotation, it drives the generator to rotate and generate electricity.

In order to achieve greater power density and more efficient coupling power, the transmission power shifting and transmission adopts a planetary gear transmission system, forming a combination of multiple speed ratios through the action of different clutches. The current planet row structure uses RAVIGNEAVX planet row and optimises the use of its 3 Drive gears. When D-1 gear is used, C1 clutch and B2 clutch are combined, at which time the speed ratio is 1.586; when D-2 gear is used, C1 clutch and C2 clutch are combined, at which time the speed ratio is 1; when D3 gear is used, C2 clutch and B2 clutch are combined, at which time the speed ratio is 0.697.

Housing

S1215490

- Front Housing

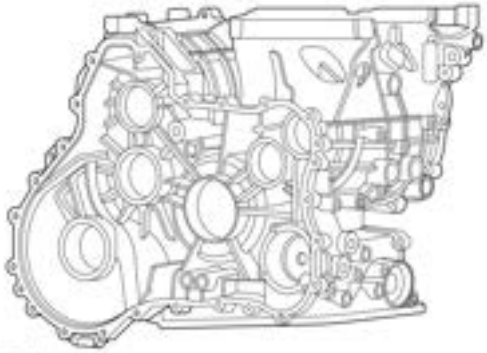

S1215491

- Main Housing

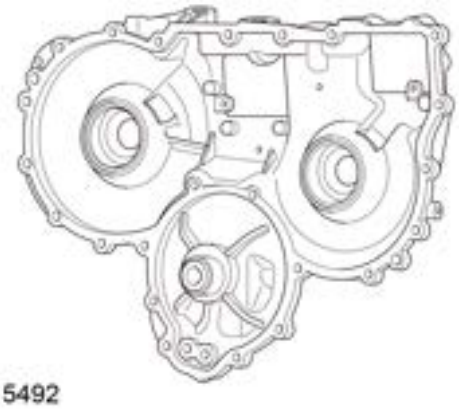

S1215492

- End Cover

The HT11 assembly housing consists of 3 parts, namely the front housing, the main housing and the end cover. The HT11 assembly housing is made of cast aluminum, and the HT11 assembly front housing is connected to the engine.

Power Electronic Box

The power electronic box fitted on the top of the electric drive unit can achieve dual-motor control and integrates functions such as driving and power generation. It has strong current output capability, high torque control accuracy, safe and reliable operation, and high efficiency.

Operation

HT11 adopts dual-motor hybrid topology, which can achieve optimal operation of various working modes according to the vehicle conditions:

Pure Electric Drive Mode

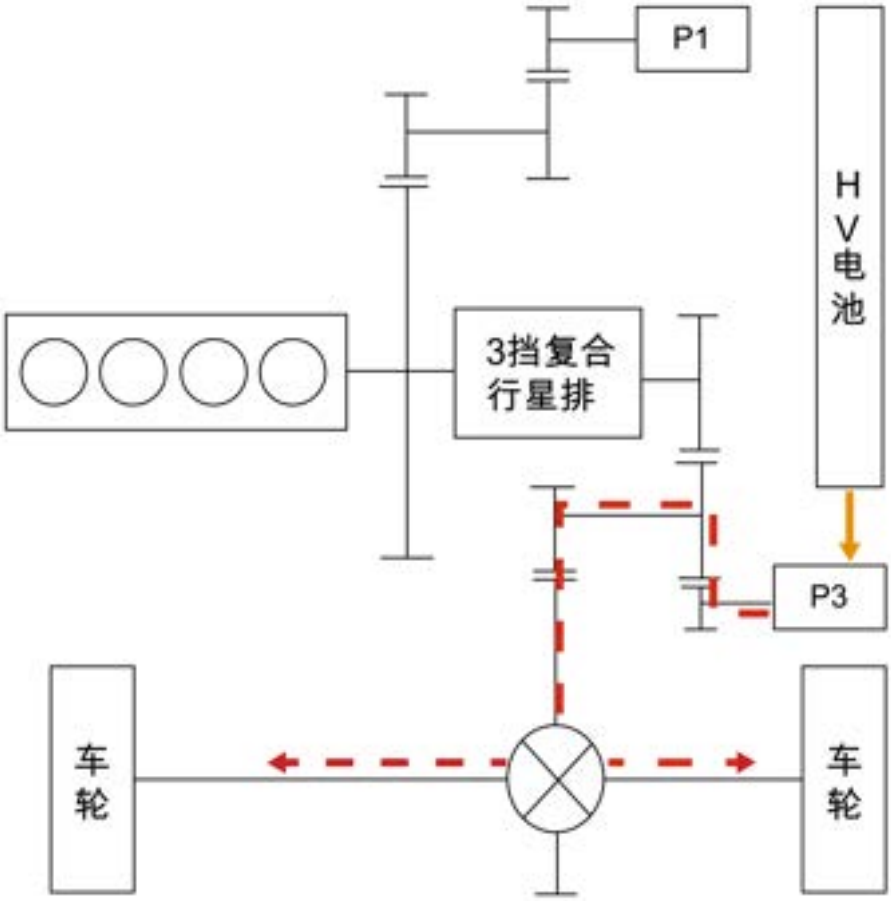

S1215568

- Working condition: low speed, high SOC
- Engine: not started
- Transmission: not involved in the drive
- P1 motor: not working
- P3 motor: directly driving the wheels
- HV battery: providing electrical energy to P3 motor

Tandem Drive Mode

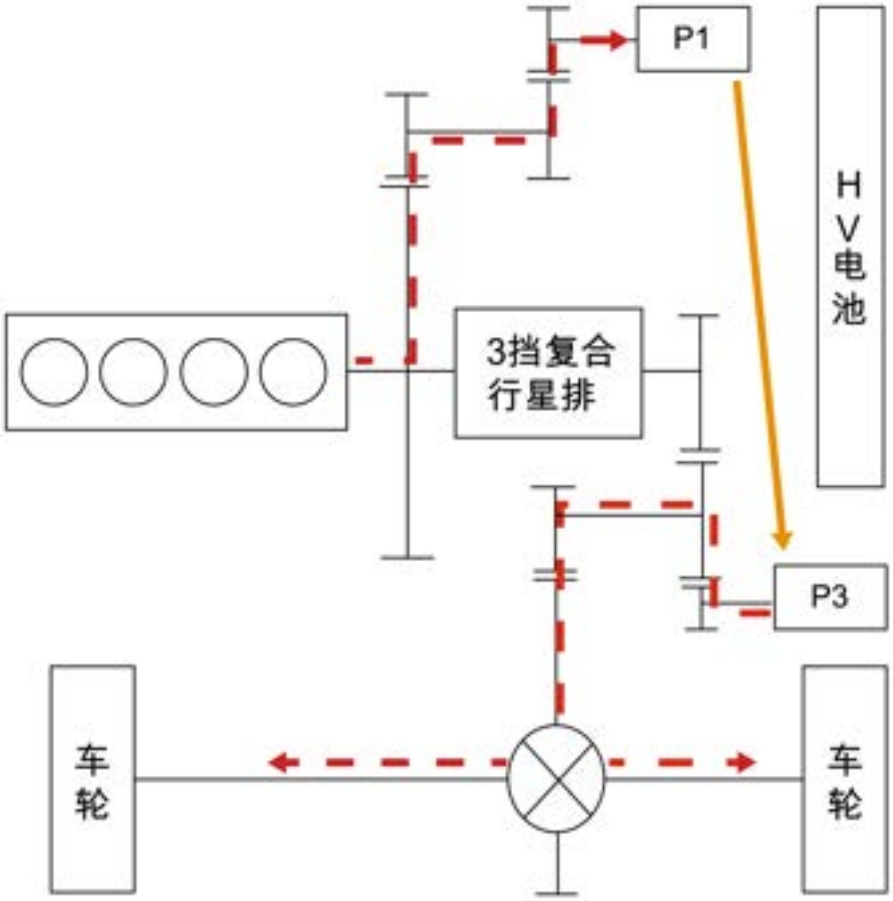

S1215569

- Working condition: medium-low speed cruise and medium-low speed with large load requirements (rapid acceleration, climbing, etc.), low SOC
- Engine: started and charging P1
- Transmission: not involved in the drive
- P1 motor: in charging state, electrical energy is transferred to P3 motor via PEU
- P3 motor: receiving the electrical energy converted by P1 motor and directly driving the wheels
- HV battery: not involved in the drive

Parallel drive mode (2nd/3rd/4th gear)

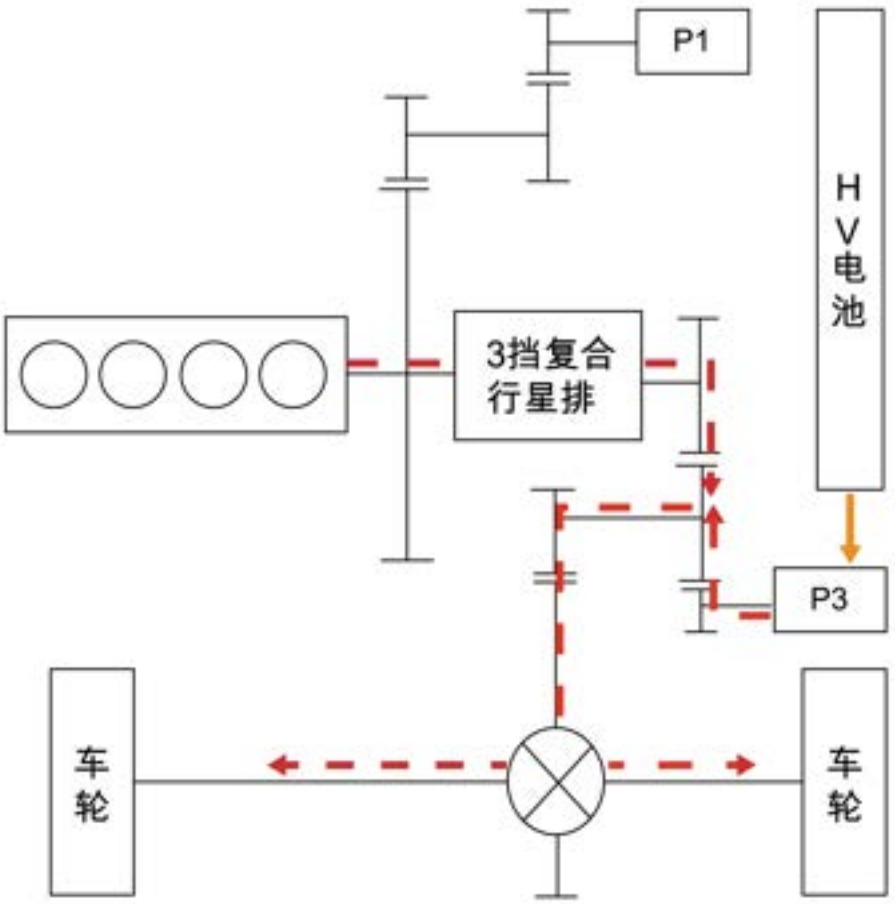

S1215570

- Working condition: medium-high speed cruise and medium-high speed with large load requirements (rapid acceleration, climbing, etc.), high SOC
- Engine: started
- Transmission: directly driving the wheels
- P1 motor: not working
- P3 motor: driving the vehicle with short-time power assist
- HV battery: providing electrical energy to P3 motor

Charge Mode for Driving

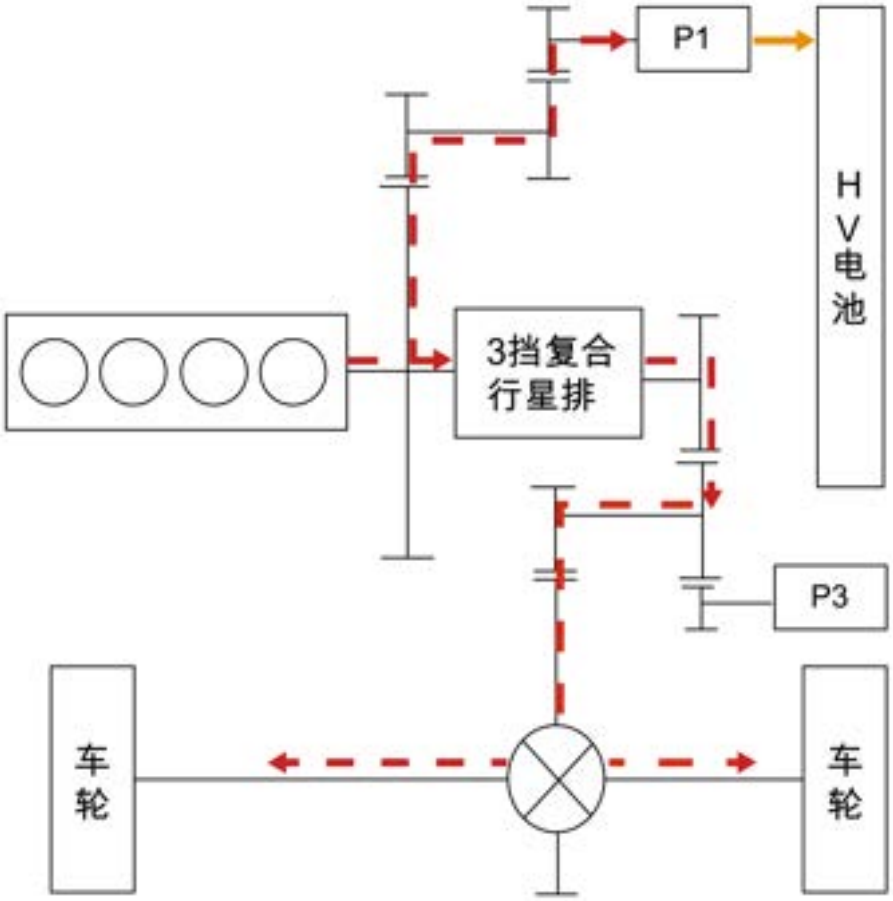

S1215571

- Working condition: medium-high speed, low SOC
- Engine: started
- Transmission: involved in the drive
- P1 motor: in charging state
- P3 motor: not working
- HV battery: receiving electrical energy delivered by P1 and storing it (tandem condition with medium-low speeds, low SOC also supports driving charging)

Charing Mode for Idle Speed

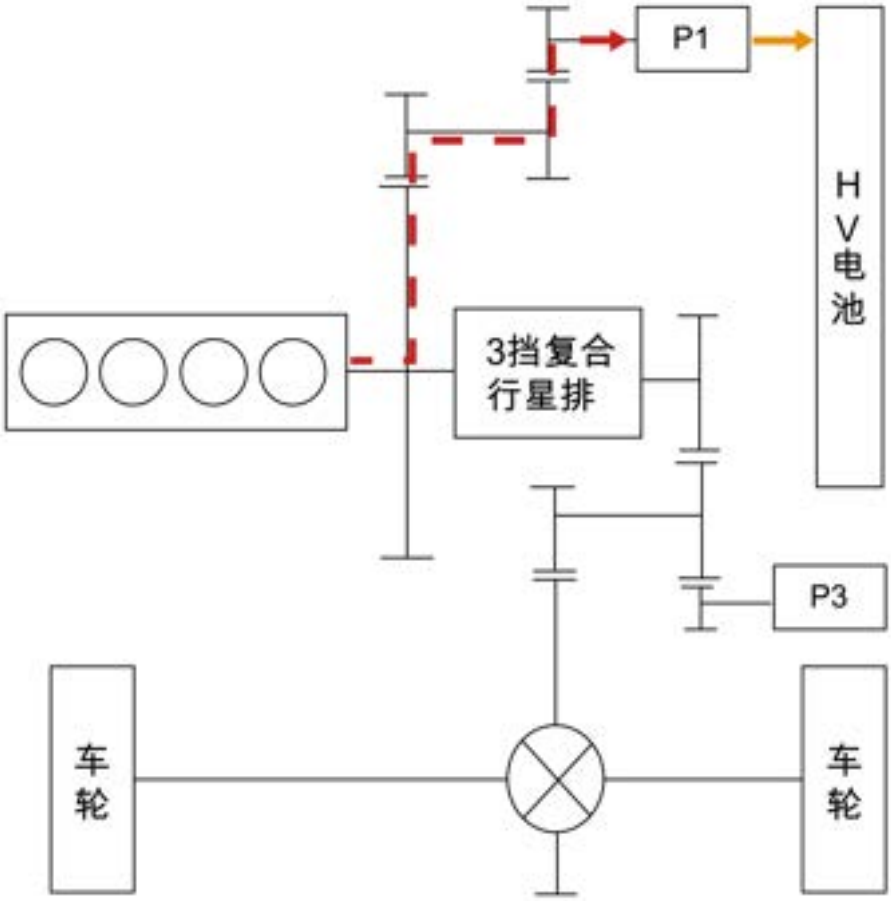

S1215572

- Working condition: idle in place, low SOC
- Engine: started and charging P1
- Transmission: not involved in the drive
- P1 motor: in charging state
- P3 motor: not working
- HV battery: receiving electrical energy delivered by P1 and storing it

Energy Regeneration Mode

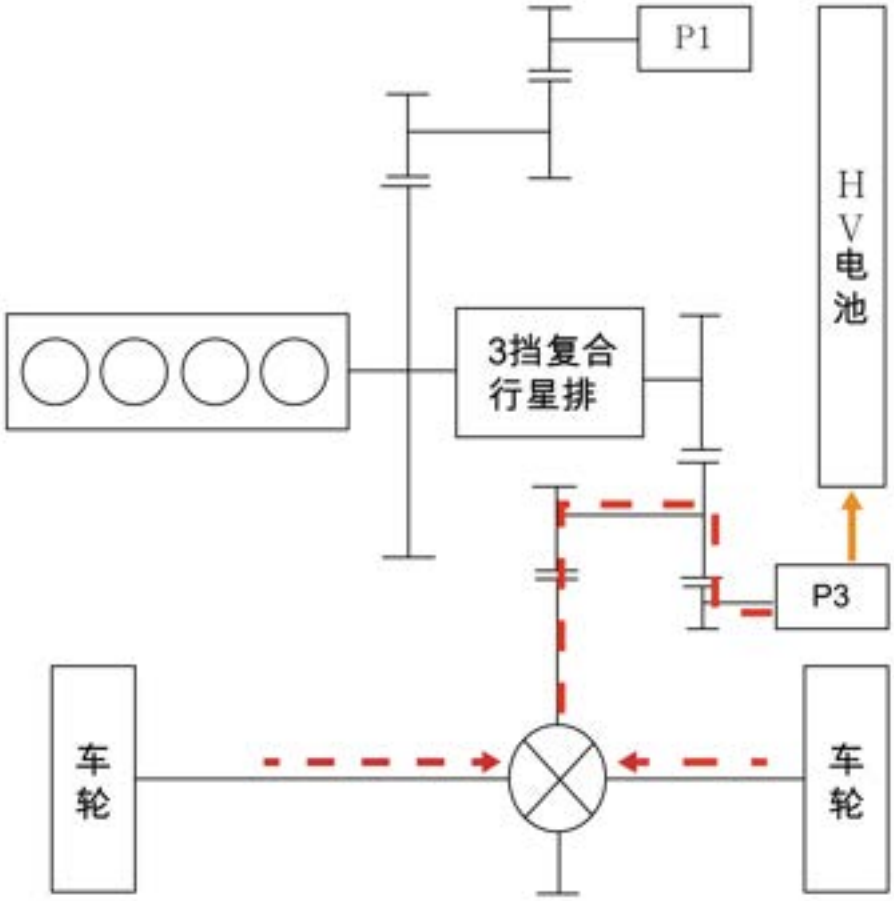

S1215573

- Working condition: free rolling and braking rolling, low SOC
- Engine: not working
- Transmission: not involved in the drive
- P1 motor: not working
- P3 motor: in generating state, converting kinetic energy at the wheel end into electrical energy
- HV battery: receiving electrical energy delivered by P3 and storing it

Service Guide - Electric Drive Transmission HT11

Drain and Refill

1. Remove the manual service disconnect.

☞ **Manual Service Disconnect (MSD) Remove**

2. Remove the bottom deflector.

☞ **Bottom Deflector Remove**

3. Place a suitable container under the electric drive unit.
4. Clean the area around the oil filler plug, remove the oil filler plug and discard the sealing gasket and oil filler plug.

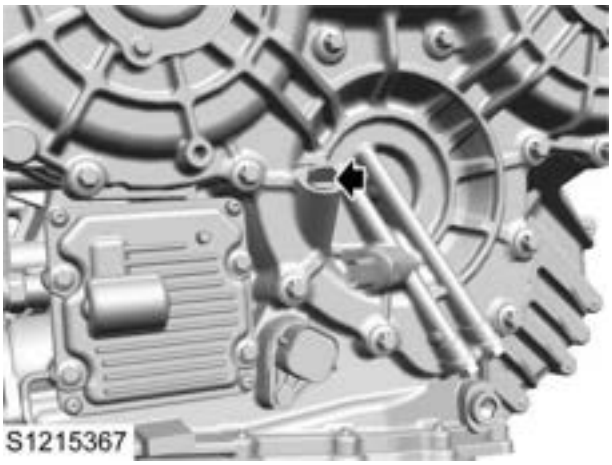

5. Clean the area around the oil drain plug, remove the oil drain plug and discard the sealing gasket and oil drain plug.

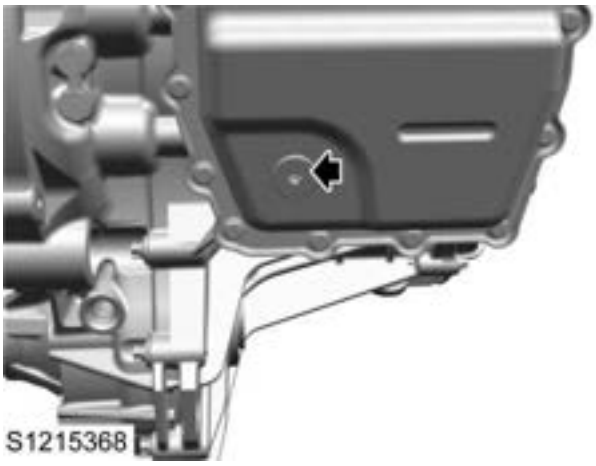

6. Drain the electric drive unit fluid.
7. Clean the filler and oil drain plug.
8. Place the new sealing gasket on the new oil drain plug, fit and tighten the oil drain plug to **13-17Nm** , and check the torque.
9. Remove the oil level plug.

10. Add an appropriate amount of electric drive unit fluid through the oil filler.
11. Observe the hole of the fuel level plug to see if there is any fluid flowing out.
12. Power on the vehicle and place the shift lever in P gear. Open the hood. The vehicle enters service mode and the engine starts charging. At this point, the charging speed is high. After about 3 minutes, the engine speed decreases to 1100 RPM. Read the transmission oil temperature, which should reach 40±5°C. Open the oil level hole (while the engine remains in idle state) and drain the excess transmission oil.
13. Place a new sealing gasket on the oil filler plug, fit the oil filler plug, tighten it to **12-18Nm** , and check the torque.
14. Fit the bottom deflector.

☞ **Bottom Deflector Refit**

15. Fit the manual service disconnect.

☞ **Manual Service Disconnect (MSD) Refit**

Remove

1. Remove the powertrain.

☞ **Powertrain Remove**

2. Remove and discard 8 bolts fixing the electric drive unit to the engine.

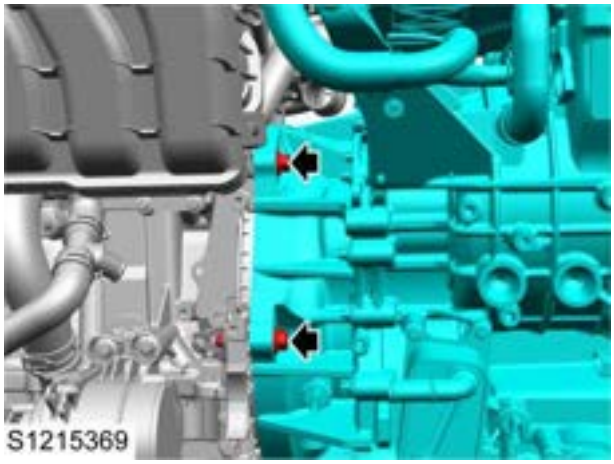

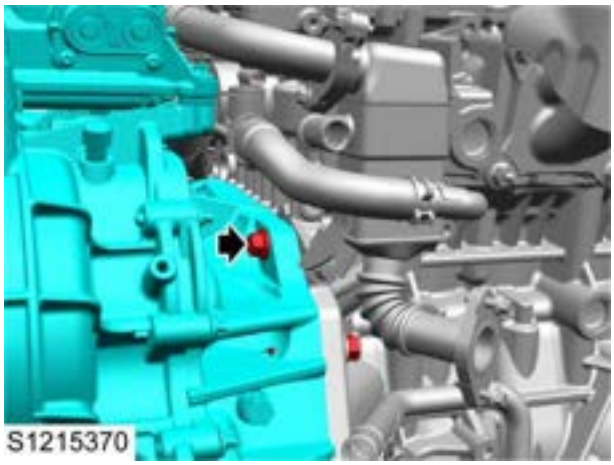

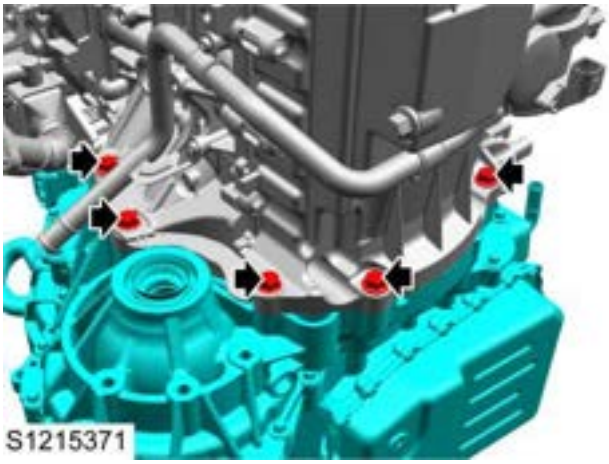

Refit

1. Fit 8 new bolts fixing the electric drive unit to the engine, tighten them to **55-65Nm** , and check the torque.
2. Fit the powertrain.

☞ **Powertrain Refit**

Remove - Left

1. Drain the electric drive unit fluid.

☞**Electric Drive Unit Fluid Drain and Refill**

2. Remove the front left axle shaft assembly.

☞**Front Left Axle Shaft Assembly Remove - Front Right Remove - Front Left**

3. Remove and discard the left differential oil seal.

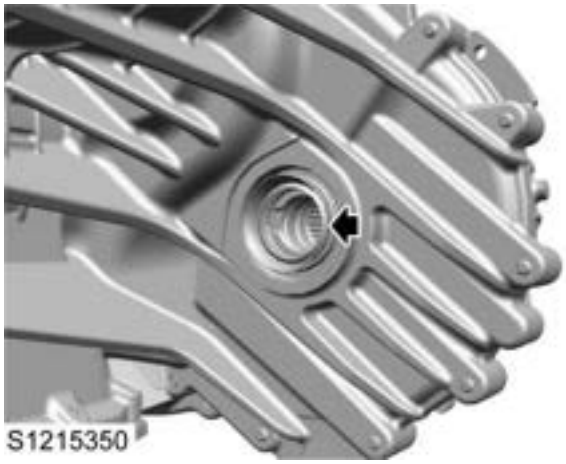

Refit - Right Side

1. Clean the oil seal groove.
2. Fit a new oil seal with the special tools TPT00331 and TPT00320.
3. Fit the front left axle shaft assembly.

☞**Front Left Axle Shaft Assembly Refit - Front Right Refit - Front Left**

4. Refill the electric drive unit fluid.

☞**Electric Drive Unit Fluid Drain and Refill**

Remove - Right

1. Drain the electric drive unit fluid.

☞ **Electric Drive Unit Fluid Drain and Refill**

2. Remove the front right axle shaft assembly.

☞ **Front Right Axle Shaft Assembly Remove - Front Right Remove - Front Left**

3. Remove and discard the right differential oil seal.

S1215351

Refit - Right Side

1. Clean the oil seal groove.
2. Fit a new oil seal with the special tools TPT00331 and TPT00320.
3. Fit the front right axle shaft assembly.

☞ **Front Right Axle Shaft Assembly Refit - Front Right Refit - Front Left**

4. Refill the electric drive unit fluid.

☞ **Electric Drive Unit Fluid Drain and Refill**

Input Shaft Oil Seal

Remove

1. Remove the electric drive unit and mount.

Electric Drive Unit and Mount Remove

2. Remove and discard the input shaft oil seal.

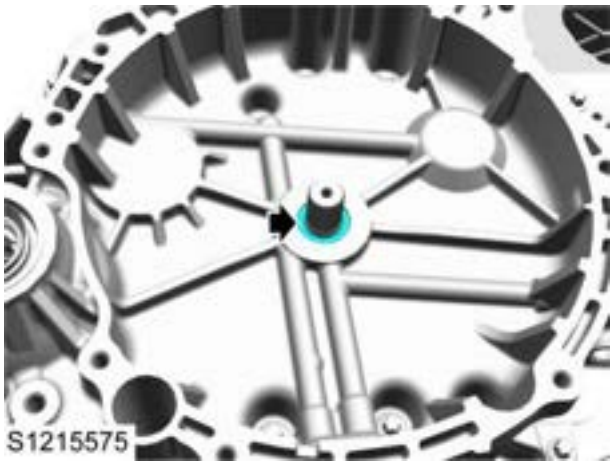

Refit

1. Protect the input shaft spline with the special tool TPT00319.
2. Fit a new input shaft oil seal with special tool TPT00344.
3. Fit the electric drive unit and mount.

Electric Drive Unit and Mount Refit

Motor rotary transformer cover plate

Remove

1. Remove the expansion tank.

☞Expansion Tank Remove - ENG Remove - Transmission

2. Remove 8 bolts fixing the resolver end cover to the housing.

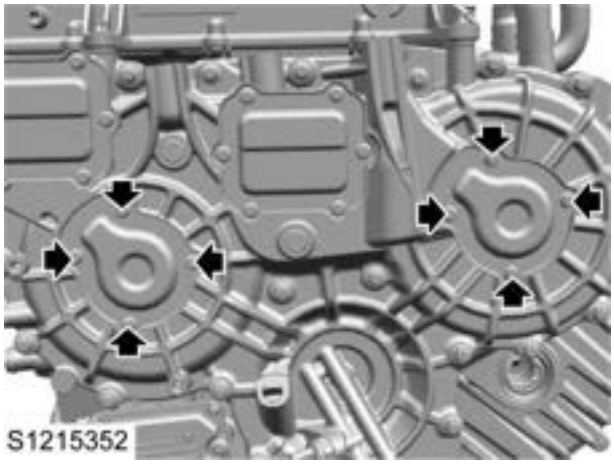

3. Remove the resolver end cover and discard the gasket.

Refit

1. Fit a new gasket.
2. Fit 8 bolts fixing the resolver end cover to the housing, tighten them to **4.5-6.5Nm** , and check the torque.
3. Fit the expansion tank.

☞Expansion Tank Refit - ENG Refit - Transmission

Exterior LV Harness

Remove

1. Remove the power electronic box.

Power Electronic Box – PEU Remove

2. Disconnect all harness connectors (1).
3. Remove 1 bolt (2) fixing the ground wire to the housing.

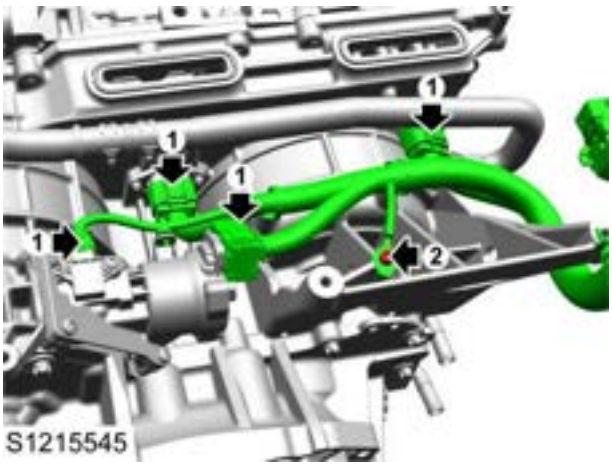

4. Disconnect all clips, and remove the low-voltage harness.

Refit

1. Fit all the clips.
2. Fit 1 bolt fixing the connecting wire to the housing, tighten it to **7.5-10.5Nm** , and check the torque.
3. Connect all the harness connectors.
4. Fit the power electronic box.

Power Electronic Box – PEU Refit

Cooling Water Pipe

Remove

1. Remove the power electronic box.

Power Electronic Box – PEU Remove

2. Disconnect the water pipe from the electric drive unit.

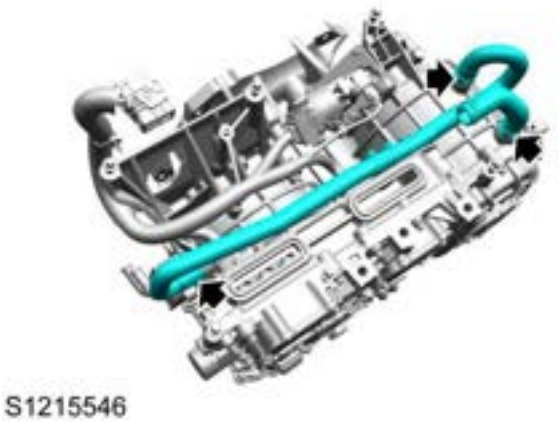

3. Remove the water pipe.

Refit

1. Connect the connector of the pipe and electric drive unit.
2. Fit the power electronic box.

Power Electronic Box – PEU Refit

Electronic oil pump

Remove

1. Remove the manual service disconnect.

☞Manual Service Disconnect (MSD) Remove

2. Drain the electric drive unit fluid.

☞Electric Drive Unit Fluid Drain and Refill

3. Disconnect the harness from the electronic oil pump.

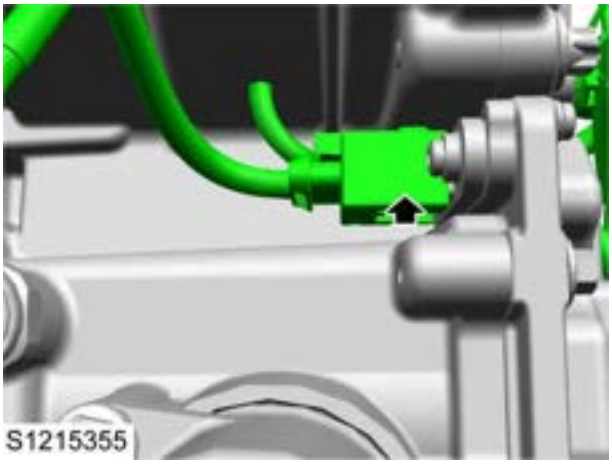

4. Remove 4 bolts fixing the electronic oil pump to the housing.

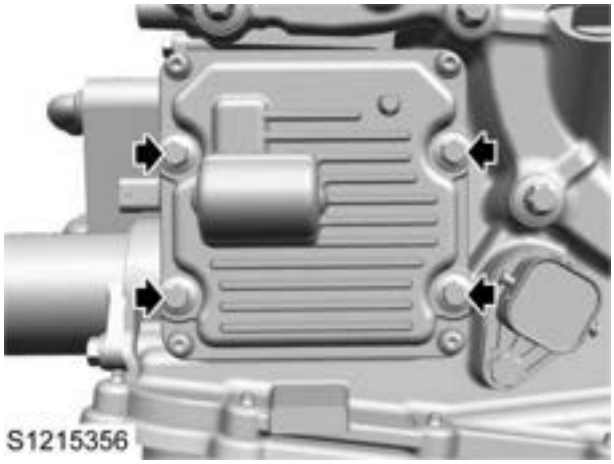

5. Remove the electronic oil pump and discard all O-rings.

Refit

1. Fit the new O-ring.
2. Fit 4 bolts fixing the electronic oil pump to the housing, tighten them to **9-11Nm** , and check the torque.
3. Connect the harness to the electronic oil pump.
4. Refill the electric drive unit fluid.

☞Electric Drive Unit Fluid Drain and Refill

5. Fit the manual service disconnect.

☞Manual Service Disconnect (MSD) Refit

Remove

1. Remove the suction filter.

☞ Suction Filter Remove

2. Disconnect the harness (1) from the valve body.
3. Remove 1 bolt (2) fixing the temperature sensor to the valve body.
4. Remove 14 bolts (3) fixing the valve body to the housing.

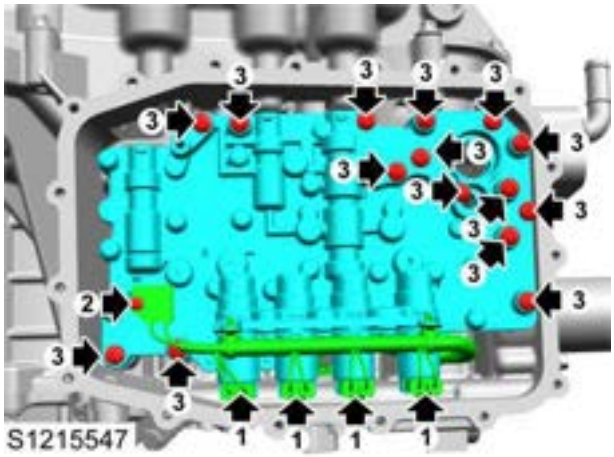

5. Remove the valve body assembly.

Refit

1. Fit 15 bolts fixing the valve body to the housing, tighten them to **7.5-10.5Nm** , and check the torque.
2. Fit and tighten 1 bolt fixing the temperature sensor to the valve body.
3. Connect the harness to the valve body.
4. Fit the suction filter.

☞ Suction Filter Refit

Valve Body Harness

Remove

1. Remove the valve body.

☞Valve Body Remove

2. Disconnect the valve body harness from the sensor (1).
3. Remove 1 bolt (2) fixing the through-cylinder connector to the housing.

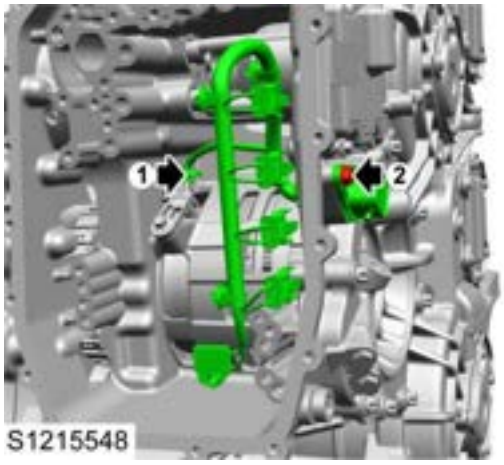

4. Remove the valve body harness and oil temperature sensor.

Refit

1. Fit 1 bolt fixing the through-cylinder connector to the housing, tighten it to **7.5-10.5Nm** , and check the torque.
2. Connect the connector of the valve body harness and sensor.
3. Fit the valve body.

☞Valve body Refit

Remove

1. Remove the oil pan.

☞Oil Pan Remove

2. Remove 1 bolt fixing the suction filter to the housing.

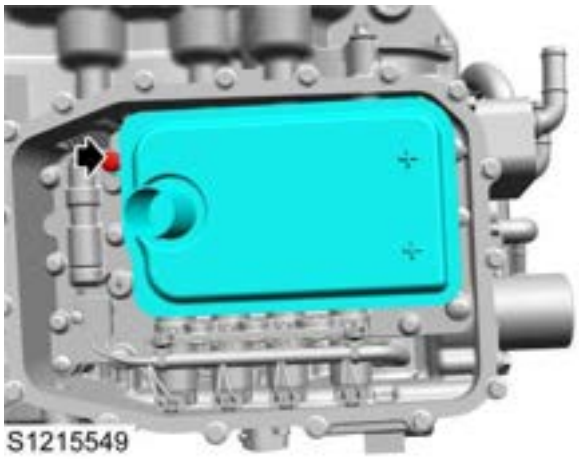

3. Remove the suction filter and discard the O-ring.

Refit

1. Fit the new O-ring.
2. Fit 1 bolt fixing the suction filter to the housing, tighten it to **8-12Nm** , and check the torque.
3. Fit the oil pan.

☞Oil Pan Refit

Pressure Filter

Remove

1. Drain the electric drive unit fluid.

☞Electric Drive Unit Fluid Drain and Refill

2. Remove 2 bolts fixing the press filter to the housing.

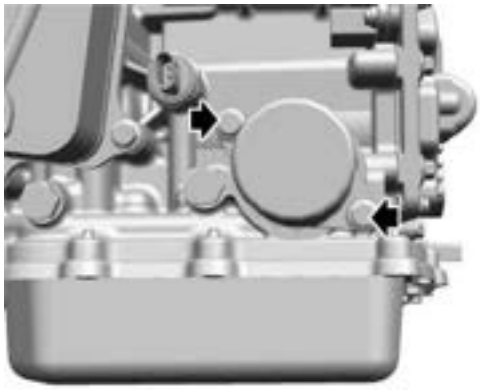

S1215360

3. Remove the press filter and discard the filter element and O-ring.

Refit

1. Fit the new filter element and O-ring.
2. Fit 2 bolts fixing the pressure filter to the housing, tighten them to **7.5-10.5Nm** , and check the torque.
3. Refill the electric drive unit fluid.

☞Electric Drive Unit Fluid Drain and Refill

Remove

1. Remove the electric drive unit assembly and mount.

☞ Electric Drive Unit Assembly and Mount Remove

2. Remove 12 bolts fixing the high-voltage harness cover plate to the housing and discard the gaskets.

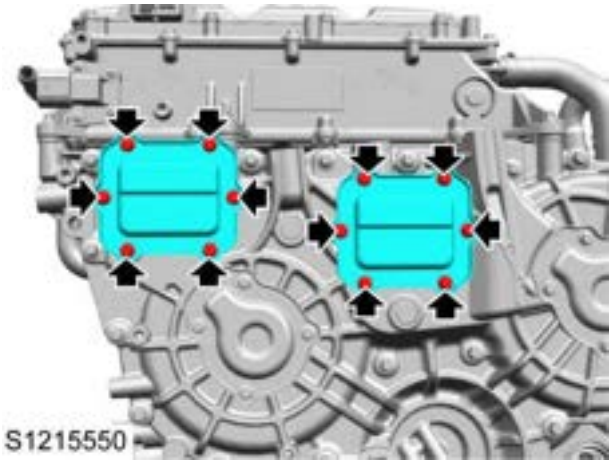

3. Remove 6 bolts fixing the PEU high-voltage harness to the transmission.

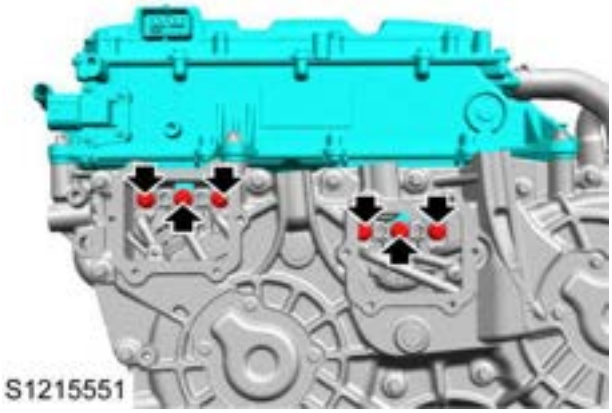

4. Disconnect the pipeline (1) from the PEU.
5. Disconnect the harness (2) from the PEU.
6. Remove 6 bolts (3) fixing the PEU to the housing.

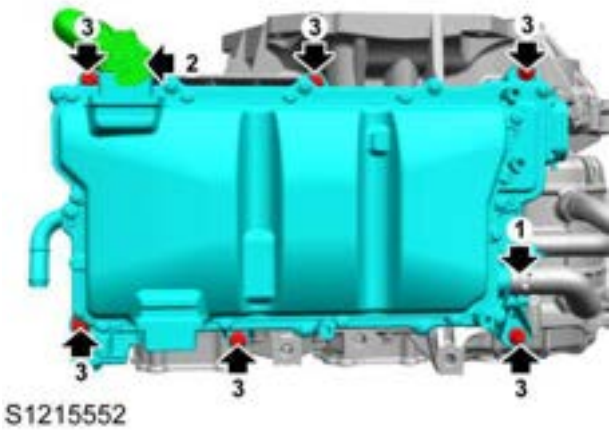

7. Remove the PEU.

Refit

Caution :

Do not install this product in places with strong electric fields or strong electromagnetic interference!

Caution :

Before carrying out installation work, please ensure that the mechanical strength of the installation location is sufficient to support the weight of the equipment, otherwise it may cause mechanical hazards.

Caution :

Do not wear loose clothing or accessories during installation operations, as there may be a risk of electric shock!

Caution :

When installing the product in a closed environment (such as inside a cabinet or chassis), please use a cooling device (such as a cooling fan or air conditioning) to fully cool it to meet the installation environment requirements, otherwise it may cause the product to overheat or catch fire.

Caution :

It is strictly prohibited to modify this product!

Caution :

It is strictly prohibited to twist the fixing bolts and red marked bolts of product components and components!

Caution :

When installing this product in a cabinet or terminal equipment, the cabinet or terminal equipment needs to provide corresponding protective devices such as fire-resistant enclosures, electrical protective enclosures, and mechanical protective enclosures, and the protection level should comply with relevant IEC standards and local laws and regulations.

Caution :

When installing equipment with strong electromagnetic interference such as transformers, please install shielding protection devices to avoid misoperation of this product!

Caution :

Please install the product on flame-retardant objects such as metal, and do not allow flammable substances to come into contact with the product or attach them to the product, otherwise there is a risk of causing a fire.

1. Fit 6 bolts fixing the PEU to the housing, tighten them to **33-39Nm** , and check the torque.
2. Connect the harness to the PEU.
3. Connect the pipeline to the PEU.

4. Fit 6 bolts fixing the PEU high-voltage wire to the transmission, tighten them to **21.5-28.5Nm** , and check the torque.
5. Fit 12 bolts and new gaskets fixing the high voltage harness cover plate to the housing, tighten them to **4.5-6.5Nm** , and check the torque.
6. Fit the electric drive unit assembly and mount.

☞ **Electric Drive Unit Assembly and Mount Refit**

7. Perform the programming, encoding and self-learning for the power electronic box.

☞ **Drive Motor Control Module (PEU)**

Oil Cooler

Remove

1. Drain the coolant.

☞Coolant Drain - ENG Refill - ENG Drain Refill

2. Disconnect the pipeline (1) from the oil cooler.
3. Remove 4 bolts (2) fixing the oil cooler to the housing.

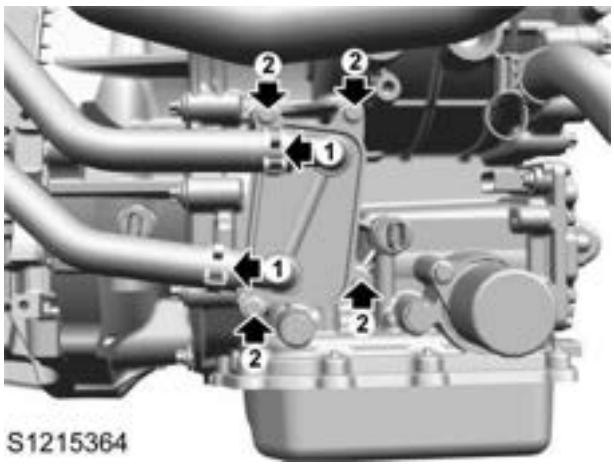

4. Remove the oil cooler and discard the O-ring.

Refit

1. Fit the new O-ring.
2. Fit 4 bolts fixing the oil cooler to the housing, tighten them to **7.5-10.5Nm** , and check the torque.
3. Connect the pipeline to the oil cooler.
4. Refill the coolant.

☞Coolant Drain - ENG Refill - ENG Drain Refill

Oil Pan

Remove

1. Drain the electric drive unit fluid.

☞Electric Drive Unit Fluid Drain and Refill

2. Remove 17 bolts fixing the oil pan to the housing.

S1215553

3. Remove the magnets from the oil pan.

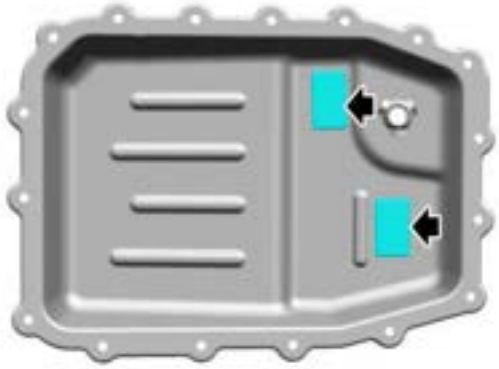

S1215554

Refit

1. Fit the magnet.
2. Apply the sealant to the main housing.
3. Fit 17 bolts fixing the oil pan to the housing, tighten them to **7.5-10.5Nm** , and check the torque.
4. Refill the electric drive unit fluid.

☞Electric Drive Unit Fluid Drain and Refill

Remove

1. Remove the PEU.

PEU Remove

2. Disconnect the harness (1) from the parking mechanism.
3. Remove 4 bolts fixing the parking motor to the housing and discard the O-ring (2).

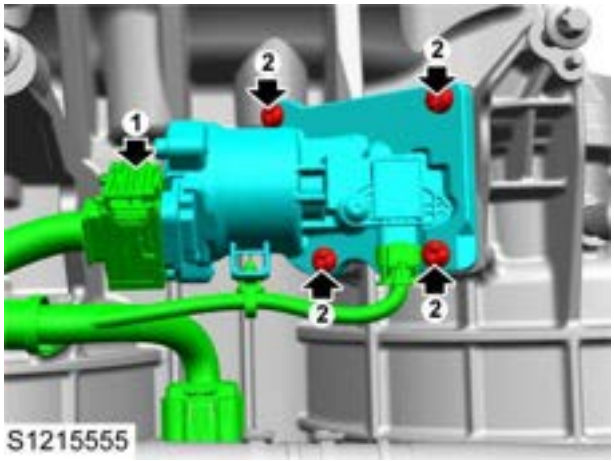

Refit

1. Fit 4 bolts and new O-rings fixing the parking motor to the housing, tighten them to **7.5-10.5Nm** , and check the torque.
2. Fit the PEU.

PEU Refit

Remove

1. Remove the power electronic box.

☞**Power Electronic Box Remove**

2. Disconnect the harness (1) from the parking position sensor.
3. Remove 1 bolt (2) fixing the parking position sensor to the transmission.

4. Remove the parking position sensor.

Refit

1. Fit 1 bolt fixing the parking position sensor to the transmission, tighten it to **4.2-5.2Nm** , and check the torque.
2. Connect the harness to the parking position sensor.
3. Fit the power electronic box.

☞**Power Electronic Box Refit**

Remove

1. Remove the valve body assembly.

☞Valve Body Assembly Remove

2. Disconnect the harness (1) from the input shaft speed sensor.
3. Remove 1 bolt (2) fixing the input shaft speed sensor to the housing.

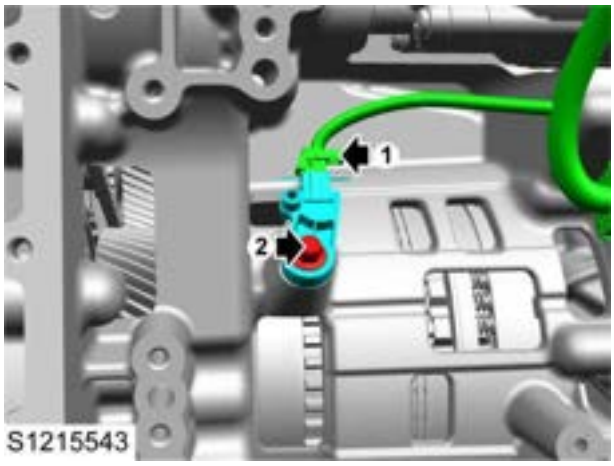

4. Remove the input shaft speed sensor.

Refit

1. Fit the input shaft speed sensor.
2. Fit 1 bolt fixing the input shaft speed sensor to the housing, tighten it to **7.5-10.5Nm** , and check the torque.
3. Connect the harness to the input shaft speed sensor.
4. Fit the valve body assembly.

☞Valve Body Assembly Refit

Oil Pressure Sensor

Remove

1. Disconnect the negative battery cable.
2. Drain the transmission fluid.

☞ Transmission Fluid Drain and Refill

3. Disconnect the harness (1) from the C1 oil pressure sensor.
4. Disconnect the harness (2) from the C2 oil pressure sensor.
5. Disconnect the harness (3) from the main oil pressure sensor.
6. Remove the C1 oil pressure sensor (4) from the housing.
7. Remove the C2 oil pressure sensor (5) from the housing.
8. Remove the main oil pressure sensor (6) from the housing.

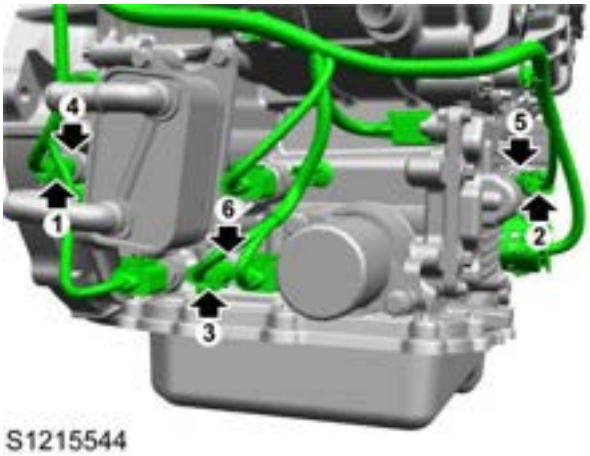

S1215544

Refit

1. Fit the main oil pressure sensor to the engine, tighten it to **9-11Nm** , and check the torque.
2. Fit the C2 oil pressure sensor to the engine, tighten it to **9-11Nm** , and check the torque.
3. Fit the C1 oil pressure sensor to the engine, tighten it to **9-11Nm** , and check the torque.
4. Connect the harness to the main oil pressure sensor.
5. Connect the harness to the C2 oil pressure sensor.
6. Connect the harness to the C1 oil pressure sensor.
7. Refill the transmission fluid.

☞ Transmission Fluid Drain and Refill

8. Connect the negative battery cable.

Coolant Pipeline Air Tightness Test

1. Remove the electric drive unit assembly (if necessary).

☞Electric Drive Unit Assembly Remove

2. Fix the special tool TEL00075 to a pipeline of TEL00034 without valve (1 and 2), and fix to the water inlet of the power electronic box, then tighten the clamp.

S1215065

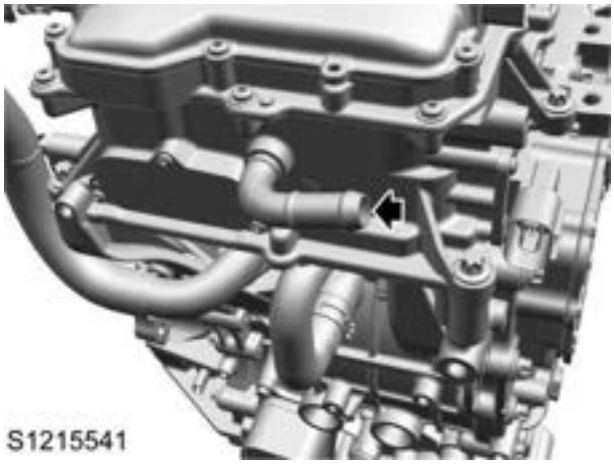

S1215541

3. Connect the other TEL00075 with valve to TEL00034 (1 and 2), and fix to the water inlet of the motor, then tighten the clamp.

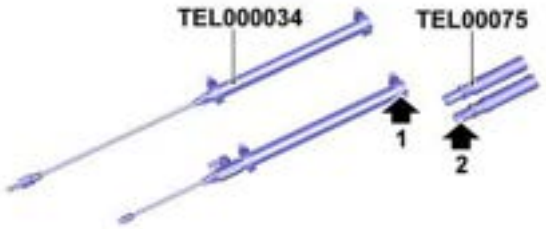

S1215066

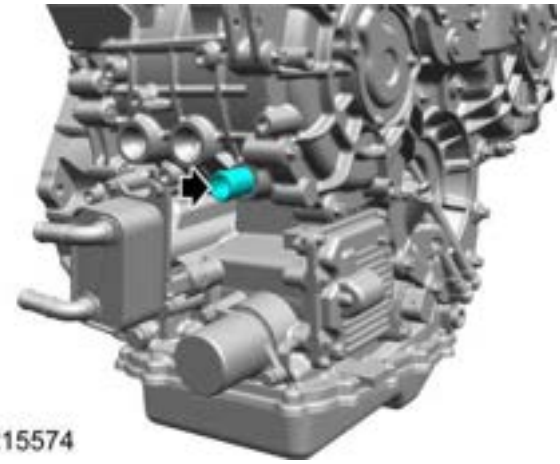

S1215574

4. Connect the other end of the pipe connected with the water inlet with the tightness test equipment.
5. Close the valve on the pipeline.
6. Use the air tightness tester to conduct the waterway air tightness test: inflate to the pressure of 1bar, inflate for 15s, maintain for 30s, test for 80s, and test if the pressure drop is ≤88Pa. If the air tightness test fails, find the leakage point and repair it, then repeat the air tightness test until it passes.
7. Fit the electric drive unit assembly (if necessary).

☞Electric Drive Unit Assembly Refit

Oil Chamber Tightness Test

1. Remove the electric drive unit assembly (if necessary).

☞Electric Drive Unit Assembly Remove

2. Plug the differentials at both ends with the special tool TPT00320 and clamp them in place with a suitable tool.
3. Remove the vent plug.

S1215576

4. Remove one branch with rubber plug of the Tee tube from the special tool TPT00301 .
5. Insert the removed branch with rubber plug into the vent, and connect the other end to air tightness tester to conduct the oil chamber tightness test: inflate to the pressure of 30kPa, inflate for 60s, maintain for 15s, test for 10s, and test if the pressure drop is ≤10Pa. If the air tightness test fails, find the leakage point and repair it,

then repeat the air tightness test until it passes.

6. Remove the special tool and fit the vent plug.
7. Fit the electric drive unit assembly.

☞Electric Drive Unit Assembly Refit

Dry Cavity Air Tightness Test

1. Remove the electric drive unit assembly (if necessary).

☞Electric Drive Unit Assembly Remove

2. Plug the differentials at both ends with the special tool TPT00320 and clamp them in place with a suitable tool.
3. Remove the vent plug (1).

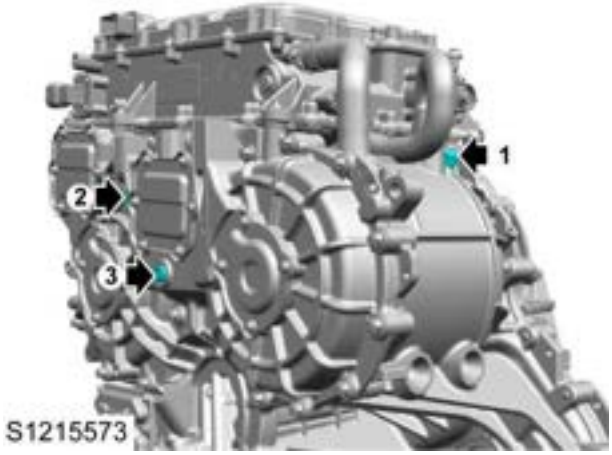

4. Use special tool T14001 or other universal tool to pass 25~30KPa pressure through the vent (1) and maintain it.
5. Remove two vent plugs (2) and (3) of the motor.

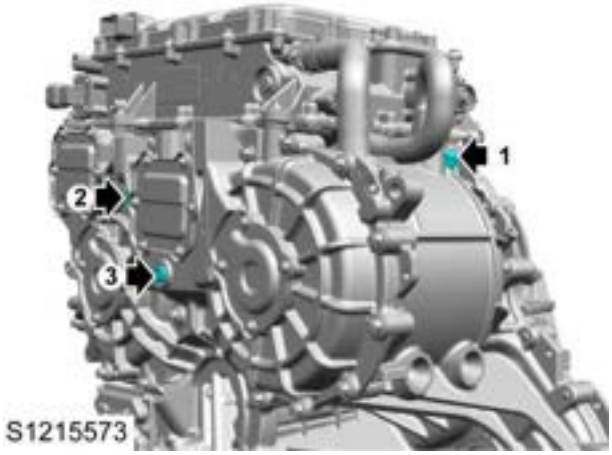

6. Use one of the plugs in the special tool TPT00301 to plug the vent (2).

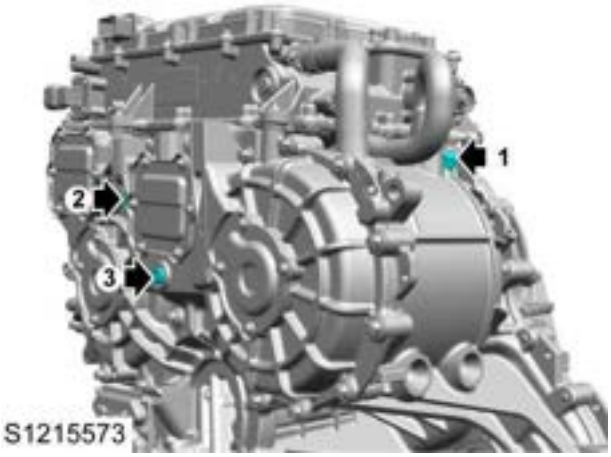

7. Remove one branch with rubber plug of the Tee tube from the special tool TPT00301 .
8. Insert the removed branch with rubber plug into the vent (3), and connect the other end to air tightness tester to conduct the oil chamber tightness test: inflate to the pressure of 25~30kPa, inflate for 40s, maintain for 15s, test for 30s, and test if the pressure drop is ≤80Pa (with PEU test). If the air tightness test fails, find the leakage point and repair it, then repeat the air tightness test until it passes.

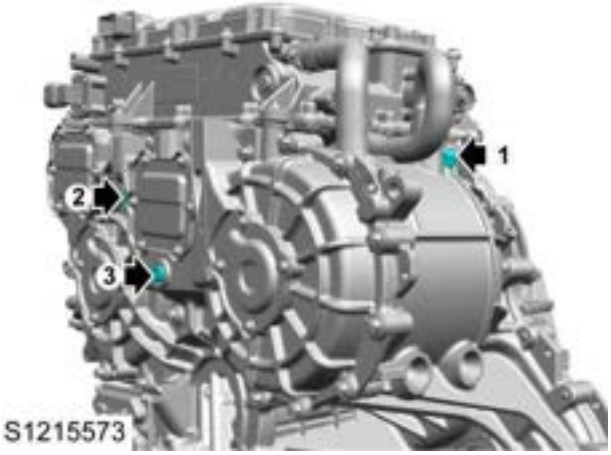

9. Remove the special tool and fit the vent plug (1) (2) (3).

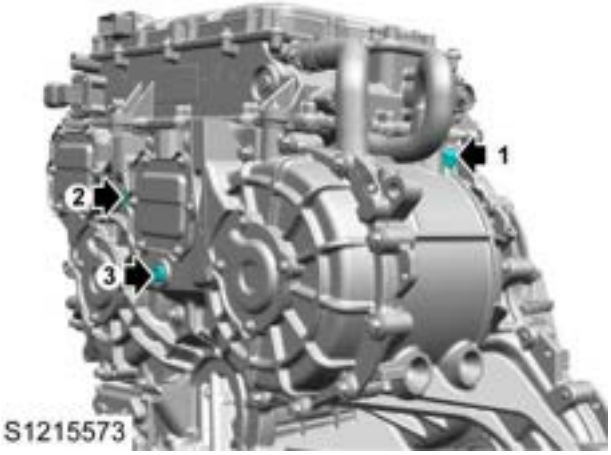

10. Fit the electric drive unit assembly.

☞Electric Drive Unit Assembly Refit

Isolation Test

1. The test locations are referenced as follows:

Serial number 1: P1 three phase

Serial number 2: P3 three phase

Serial number 3: P3 cylinder fastening part - refer to connector housing for Pin

Serial number 4: P1 cylinder fastening part - refer to connector housing for Pin

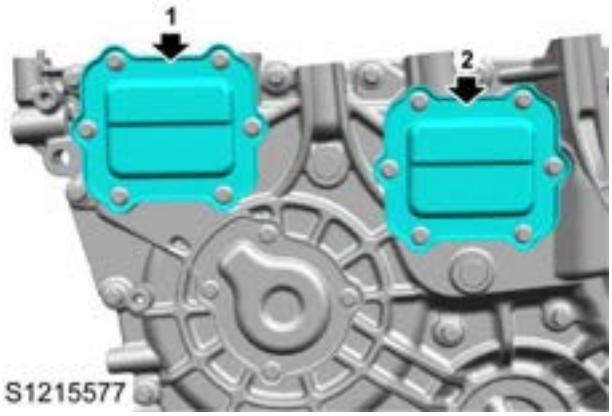

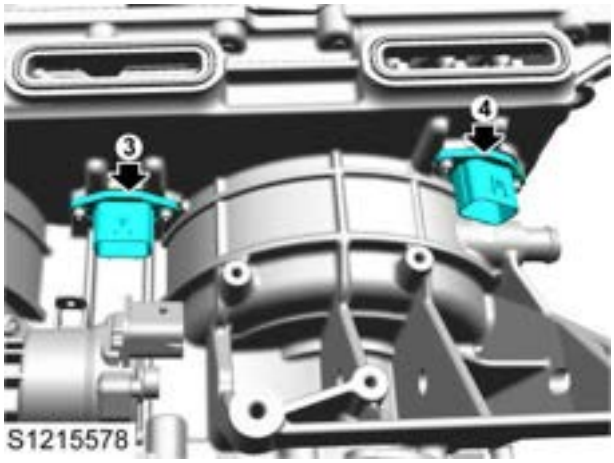

2. Take the insulation resistance tester, turn the knob to the position of 500V, respectively measure the U/V/W three-phase relative insulation resistance to ground of P1 and P3 motors, and the insulation resistance value is not less than 20MΩ.
3. Take the insulation resistance tester, turn the knob to the position of 250V, respectively measure the NTC (cylinder fastening part Pin1/Pin2) insulation resistance to ground of P1 and P3 motors, and the insulation resistance value is not less than 20MΩ.
4. Take the insulation resistance tester, turn the knob to the position of 250V, and measure the three-phase insulation resistance of NTC (cylinder fastening part Pin1/Pin2) of the P1 and P3 motors against the U/V/W, and the insulation resistance value is not less than 20MΩ.
5. Take a multimeter and measure the resolver resistance and NTC resistance of the motor.

Test item	Test standard (Ω)	Cylinder fastening part Pin
	P1/P3	
Resolver sin direct current resistance	48 ± 3	3 - 4
Resolver cos direct current resistance	46 ± 3	5-6
Resolver exciting direct current resistance	16 ± 3	9-10
NTC direct current resistance	111.6~142.8@20℃	1-2

Remove

1. Disconnect the negative battery cable.
2. Remove the driver side lower trim panel.

☞Driver Side Lower Trim Panel Remove

3. Disconnect the harness from the transmission control module.

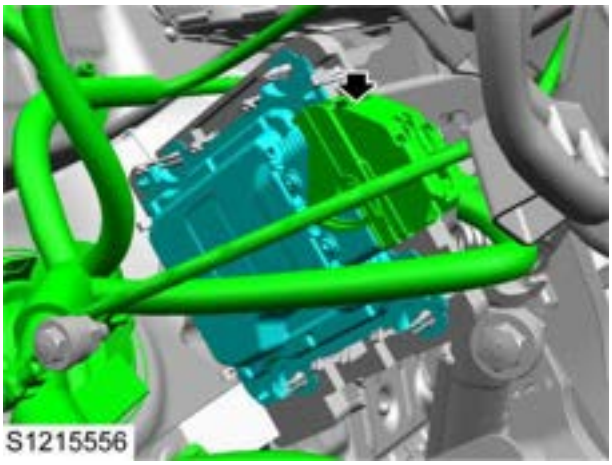

4. Loosen the clips fixing the transmission control module, and remove the transmission control module.

Refit

1. Fit the transmission control module.
2. Connect the harness to the transmission control module.
3. Fit the driver side lower trim panel.

☞Driver Side Lower Trim Panel Refit

4. Connect the negative battery cable.

Special Tool Summary Sheet

Special Tools

Tool Number	Description	Picture
TPT00331	Handle	TPT00331
TEL00075	Pipe connector	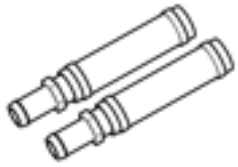 TEL00075
TEL00034	Cooling system leaktest tool	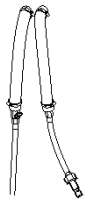 TEL00034
TPT00301	Kit-pressure test connector	TPT00301

HV Battery Pack

Specification

Torque

Description	Value
Bolt-High voltage battery pack to body	19-25Nm
Nut-High voltage battery pack is wired to body	6.5-7.5Nm
Bolt-High voltage battery pack top cover to high voltage battery pack	6.5-7.5Nm
Bolt-High voltage plug to high voltage connection copper bar	9.5-10.5Nm
Screw-High voltage battery pack Ground cable ti high voltage battery pack	6.5-7.5Nm
Bolt-High voltage plug to high voltage battery pack top cover	5.5-6.5Nm
Screw-Manually repair switch plug to high volatge pack	2.5-3.5Nm
Nut-BCU to bracket	9.5-10.5Nm
Nut-Low voltage harness connector ground point to BCU bracket	4-5Nm
Screw-Resistor terminal to BDU bolt	1.8-2.7Nm
Bolt-BDU to high voltage battery pack	7.5-8.5Nm
Bolt-Fuse box to BDU	1-3Nm
Bolt-The BDU harness ground to the BDU	3-4Nm
Bolt-P+copper bar to BDU	9.5-10.5Nm
Bolt-Wiring harness ground to positive high voltage onnection copper bar	2.3-2.7Nm
Bolt-Positive high voltage onnection copper bar to BDU	9.5-10.5Nm
Screw-BDU upper cover to BDU assembly	3-4Nm
Bolt-Module block to high voltage battery pack	5.5-6.5Nm
Bolt-Plug into high voltage battery pack	1.5-1.7Nm
Bolt-Wiring harness ground to module assembly	3-4Nm

Parameters

Parameters of High-voltage Battery Pack

Item	Parameter Values
Rated Energy, kWh	1.83
Battery Pack Quantity	1
Battery Pack Dimension, mm	845*283*200
Total Voltage Range, V	259.2-403.2
Rated Capacity, Ah	5.2
Rated Voltage, V	353.28
IP rating	IP54
Battery cell arrangement	1P96S
Battery cell, section	96
Weight, kg	30.8 ± 0.9

Battery Cell Parameters

	Item	Parameter Values
High-voltage Battery Cell	Type	Ternary lithium ion battery
	Rated Voltage, V	3.68
	Rated Capacity, Ah	5.2

Description and Operation

System Layout

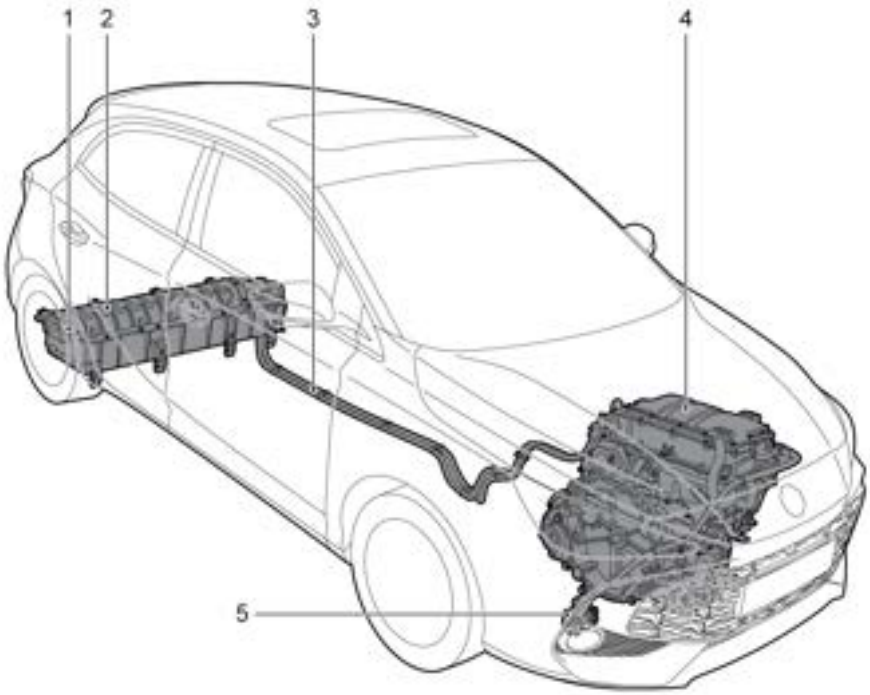

S1120241

1. Manual Service Disconnect (MSD)
2. HV Battery Pack
3. HV Harness
4. Electric Drive Unit
5. Electric A/C Compressor

System Control Diagram

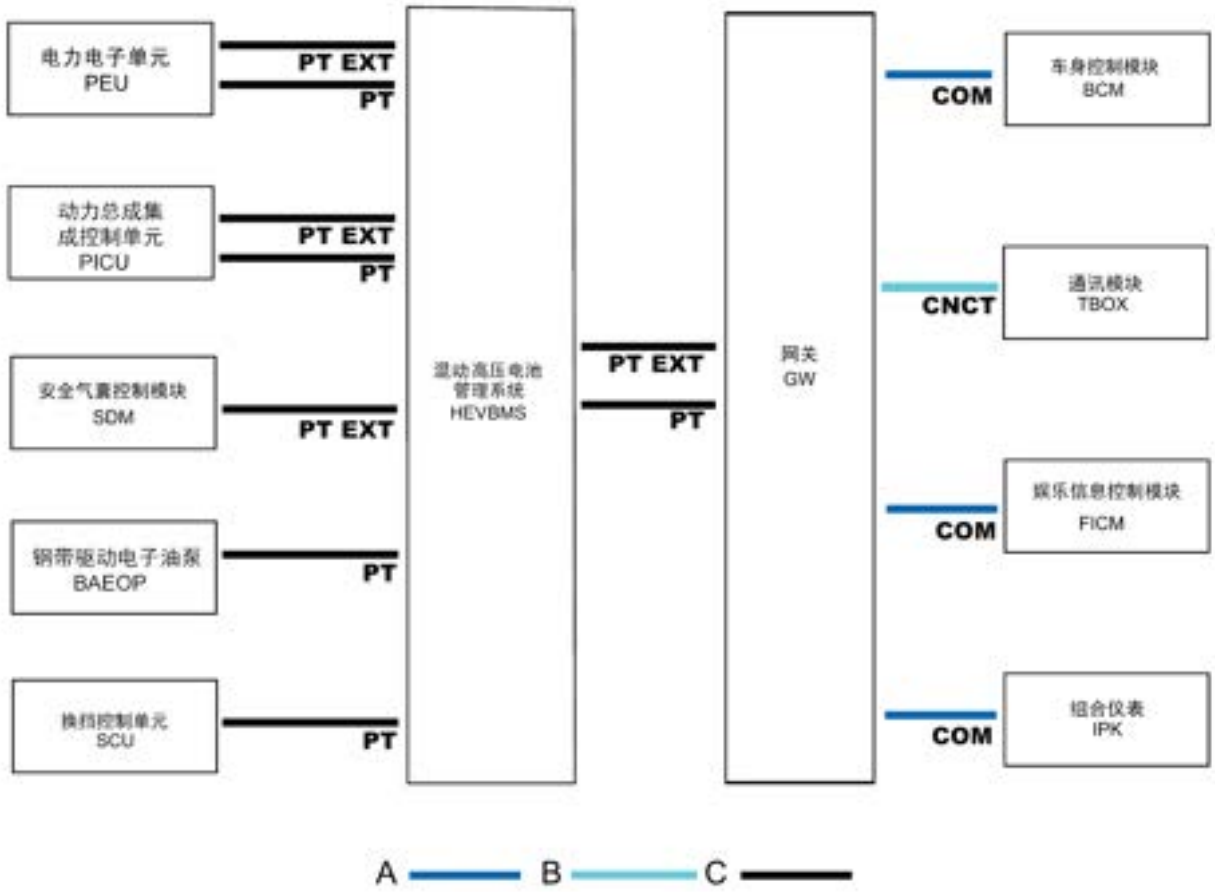

S1121028

A = Comfort CAN Bus; B = Connection CAN Bus; C = Power/Power Extension HS CAN Bus

Description

HV Battery Pack

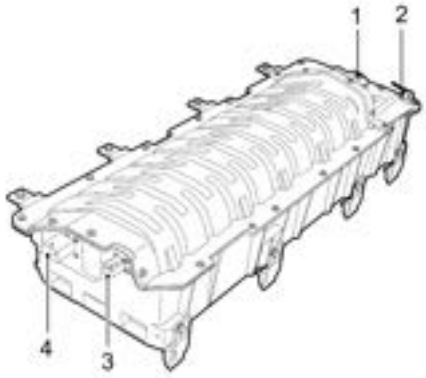

S1123464

1. Vehicle High-voltage Connector
2. Ground Wire
3. Manual Service Disconnect (MSD)
4. Vehicle Low-voltage Connector

High-voltage Battery Pack Composition

1. Battery module: Battery pack contains 8 modules.
2. Battery management system (BMS): Summarise the battery information collected by the internal controller, and through certain control strategies, provide the vehicle controller with information on the battery operation status, respond to the vehicle's high-voltage circuit on/off commands, and realise charging/discharging and thermal management of the battery.
3. Relay module: By switching on and off different high-pressure relays, the connection and disconnection of various high-pressure circuits are achieved.
4. High/low voltage harness and connector.
5. Cooling system accessories.
6. Case.

HV Battery Pack Service

The service of high voltage battery packs requires special equipment:

Battery Pack Charging and Discharging Integrated Machine	SMIL-SE-001

Operation

High-voltage Battery Pack Function Operation

1. Communicate with the vehicle through CAN network.
2. Provide the status of the high-voltage battery pack for the vehicle control unit, control the on/off status of different high-voltage relays to realize the on/off of various high-voltage circuits and finally realize the management of charging and discharging and the indication of high-voltage battery pack battery status.
3. Thermal management function: Thermal management of high-voltage battery pack is realized by air cooling.
4. High voltage safety management: realize insulation resistance detection, high voltage interlock detection and collision detection functions, and possess fault detection management and handling mechanism.

Service Guide

Disassemble Precautions

Basic Requirements

Basic requirements for related precautions for high voltage in vehicle are as follows:

- During repair of vehicle high-voltage components, non-relevant personnel are not allowed to contact the high-voltage components at will.
- Do not touch the components with the high-voltage warning sign at will.
- If it is necessary to dismantle the relevant high voltage components, the dismantling personnel need to undergo high voltage safety training.
- When operating high voltage components, the operator must wear protective equipment as well as insulating gloves.
- Before the repair starts, power off the vehicle first, and wait 5 minutes for the repair operation.
- When disassembling or assembling electrical components, the 12V power supply and the MSD must be disconnected.
- When operating exposed high voltage system components, the operator must use a multimeter to measure if there is high voltage, and don't do anything before making sure that there is no high voltage.
- After removing the high voltage components, it is necessary to check the assembling and connection of all high voltage components and ensure their reliability before reconnecting the high voltage power supply.
- All high voltage components should be grounded well.

Warning：Only persons that hold the correct high voltage training certificates and qualifications are allowed to work on high voltage systems and components.

Warning：Non qualified staff are NOT permitted to dismantle high voltage systems or components (including, ESS, Electric Drive Transmission, PEB, PDU, EACP, PTC units, HV harnesses, CCU, DCDC, Charging sockets etc).

Warning：Prior to opening any high voltage circuits the systems MUST be checked using a suitable multi meter to ensure they carry no high voltage current. Where there is need to work with the high voltage system is essential that the correct 'make safe' procedure is followed - see Manual Service Disconnect procedure in the Service Repair manual. After disconnecting the Manual Service Disconnect (MSD), always wait 5 minutes prior to commencing any checks for residual voltage etc.

Caution：When removing or servicing any parts of the high voltage system it is essential that no liquids enter, contaminate or are spilled on components, harnesses or connectors.

General Description

General Information

This service manual is intended for use by professionals and qualified technicians. Without proper training or appropriate tools, injuries may occur during the service process. At the same time, it may cause damage to the battery pack or disrupt its normal operation.

The HV battery pack provides power to the vehicle's electric power drive system and auxiliary systems. The high-voltage battery pack management system is used to monitor and adjust cell voltage, current, and temperature to ensure safe operation and maximize battery life.

Safety Information

Before repairing the battery pack, refer to the safety information section. To minimize the risk of injury, pay attention to the hazard warnings, warning notices and caution notices in the manual before performing repairs. Safety information also includes requirements for personal protective equipment and work area.

This manual contains various "danger," "warning," and "caution" notices that must be considered to minimize the risk of death or personal injury resulting from battery pack service.

This manual is intended for use by trained personnel. Failure to undergo appropriate training and lack of suitable equipment and tools may result in personal injury to you and others.

The "danger," "warning," and "caution" notices are not exhaustive, and potential risks resulting from actions not outlined in this manual may not be warned against.

High-voltage danger of battery pack: the battery pack can reach a maximum voltage of around 400V. To avoid serious personal injury, a buffer area must be set up before performing repairs.

Personal protective equipment danger: the HV battery pack includes various high-voltage components. Appropriate personal protective equipment must be worn during any repair procedures to prevent serious personal injury or even death.

Battery pack reconnecting danger: reconnecting the battery pack can result in the battery pack reaching full voltage. Warning must be given during reconnection to prevent serious personal injury or even death.

Battery pack voltage danger: the battery high voltage must be disassembled before any removal and installation procedures are performed on the battery pack high voltage system, otherwise serious personal injury or even death may occur.

Potential danger of battery pack voltage: before the disassembly process of the HV battery pack, the battery pack may have full voltage. Warning must be given during connection to prevent serious personal injury or even death.

Manual service disconnect danger: the manual service disconnect can only be removed after wearing personal protective equipment, which avoids potential dangers. Failure to do so may result in serious personal injury or even death.

Repair at service area: a service area must be established before repairing the battery pack to prevent serious personal injury or even death.

Manual service disconnect warning: to avoid unintentional installation and risk of electric shock, the manual service disconnect must be stored in a secure location, or serious personal injury or even death may occur.

Fastener reminder: the use of improper fasteners may damage the battery pack. Replace all previously used high-voltage fasteners and module fasteners. Pay attention to using the correct part number, as failure to follow the instructions may damage the battery pack.

Battery pack lifting reminder: The weight of the battery pack must be evenly distributed along the length of the battery pack. The battery pack upper cover must be fitted before lifting the battery pack. Failure to follow the instructions may damage the battery pack.

Static electricity discharge reminder: static electricity discharge can damage components. Exercise extreme caution when handling all electronic components. Personal static electricity discharge must be performed before repairing any electronic components. Failure to follow the instructions may damage the battery pack.

Personal Protective Equipment

Personal protective equipment is used to protect the operator's safety and health.

Personal protective equipment includes insulated gloves (rated above 1000V), insulated shoes (rated above 1000V), face shields, or safety goggles.

Before starting work, check that all personal protective equipment is worn correctly. Do not use damaged personal protective equipment. Perform the following checks before and after use:

- Check personal protective equipment for signs of aging and damage.
- Check insulated rubber gloves for scratches, holes, and tears.
- Check insulated safety shoes for holes, damage, nails, metal parts, wear, or other issues.

Safety Work Area

Providing a safe and effective controlled work place is crucial when disassembling and repairing the battery pack.

- The work area must be indoors and protected from rain, snow, sand, and other substances.

- The work area should be separated from other areas to avoid contaminants such as metal powder, oil, or other substances. If necessary, use plastic curtains or other coverings to shield the work area.
- The work area should be at least the size of a vehicle to ensure efficient work.
- The work area floor should remain dry and ventilated, and the entry of rain or snow into the work area should be prohibited.
- Place warning signs in the work area, and unauthorized personnel should not enter the work area.

HV battery pack recharge

High Voltage Insulation Test

Test Procedures

- High voltage insulation testing is required before and after repair work is carried out.
- Move HV battery pack to work area.
- Remove the upper cover.
- Remove the module protection cover.

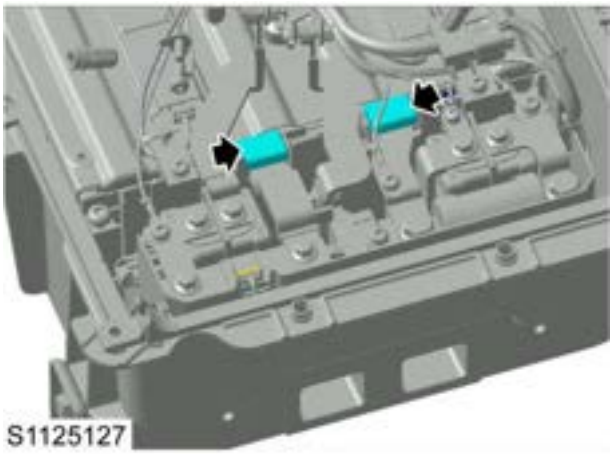

- Place the insulation meter in 500V gear, connect the positive pole to the high voltage pole on one side of the BDU module, and connect the negative pole to the tray. The test result must be greater than or equal to 20MΩ.
- Connect the positive pole to the high voltage pole on the other side of the BDU module, and connect the negative pole to the tray. The test result must be greater than or equal to 20MΩ.

Manual Service Disconnect

Remove

1. Disconnect the negative battery cable.
2. Remove the MSD service guard plate on the left rear carpet battens.
3. Loosen the clip, and remove the manual service disconnect.

4. Fit the special tool TEL00052 to the manual service disconnect base.

Refit

1. Remove the special tool TEL00052 from the manual service disconnect base.
2. Fit the manual service disconnect and secure it with clips.
3. Fit the manual service disconnect service guard plate on the left rear carpet battens.
4. Connect the negative battery cable.

HV Battery Pack

Remove

1. Disconnect the negative battery cable.
2. Remove the manual service disconnect.

☞ **Manual Service Disconnect (MSD) Remove**

3. Remove the rear seat cushion frame.

☞ **Rear Seat Cushion Frame Remove**

4. Remove the battery pack air inlet duct.

☞ **Battery Pack Air Inlet Duct Remove**

5. Disconnect the low voltage harness connector (1) from the high-voltage battery pack.
6. Disconnect the high voltage harness connectors (2) from the high-voltage battery pack.
   a. Move the lockout 1 toward the connector, and drag the connector pull ring 2 to the bottom.

S1125134

Caution :

When repairing high-voltage components, please use suitable sheaths or insulating tape to cover the disconnected high-voltage connector ports to avoid foreign objects (including oil) from entering the high-voltage ports, which may cause damage, short-circuiting, insulation abnormality and other problems.

7. Remove 1 nut (3) fixing the high-voltage battery pack ground wire to the body.

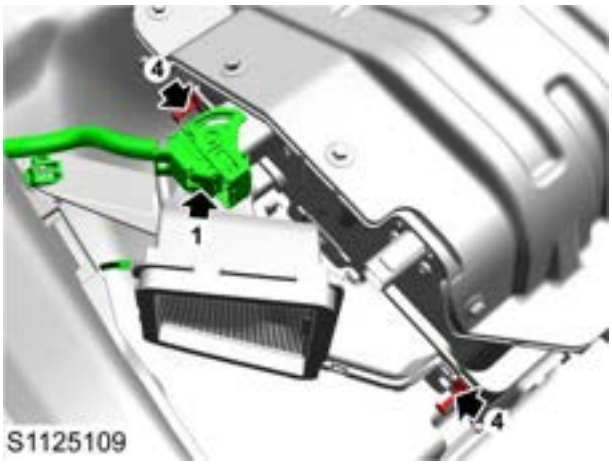

S1125109

S1125108

8. Use a multimeter (DCV, the range is greater than 400V) to measure if there is high voltage between high-voltage connector terminals of high-voltage battery pack, between the terminals and the ground and between terminals in high-voltage connectors at the high-voltage harness end. If the voltage is zero, continue removing.
9. Remove 8 bolts fixing the high-voltage battery pack to the body.

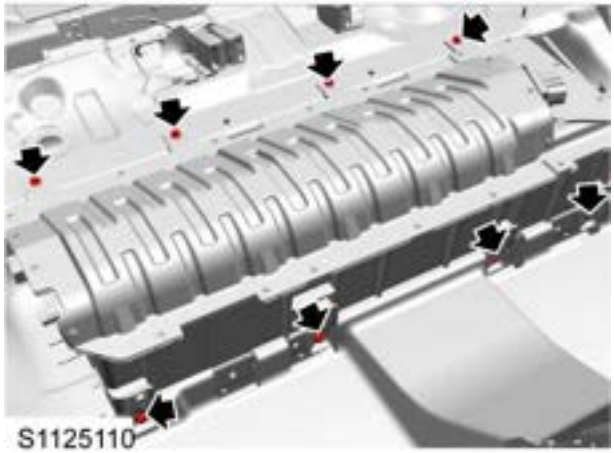

S1125110

10. Remove the high-voltage battery.

Refit

1. Fix the high-voltage battery pack to the body, fit 8 bolts, tighten them to **19-25Nm** , and check the torque.
2. Fix the high-voltage battery pack grounding wire to the body, fit 1 bolt, tighten it to **6.5-7.5Nm** and check the torque.
3. Connect the high and low-voltage harness connectors to the high-voltage battery pack.
4. Fit the battery pack air inlet duct.

☞ **Battery Pack Air Inlet Duct Refit**

5. Fit the rear seat cushion frame.

☞ **Rear Seat Cushion Frame Refit**

6. Fit the manual service disconnect.

☞ **Manual Service Disconnect (MSD) Refit**

7. Connect the negative battery cable.
8. Programme and encode the battery management

system.

☞ Battery Management System (BMS)

Remove

1. Disconnect the negative battery cable.
2. Remove the manual service disconnect.

Manual Service Disconnect (MSD) Remove

3. Remove the high-voltage battery.

HV Battery Pack Remove

4. Remove 18 bolts fixing the high-voltage battery pack upper cover 1 to the high-voltage battery pack, and remove the high-voltage battery pack upper cover 1.

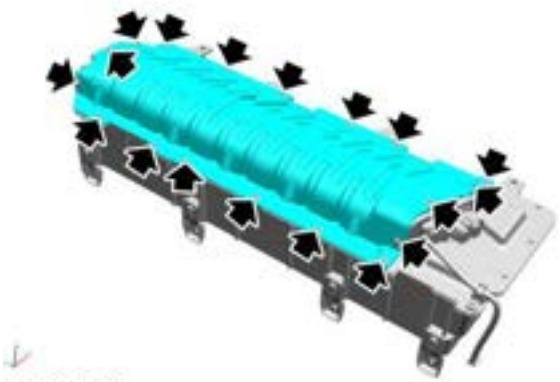

5. Remove 2 bolts (1) fixing the high-voltage plug to the high-voltage battery pack upper cover.
6. Remove 2 screws (2) fixing the high-voltage battery pack ground wire to the high-voltage battery pack, and remove the high-voltage battery pack ground wire.
7. Remove 3 bolts (3) fixing the high-voltage battery pack upper cover 2 to the high-voltage battery pack.

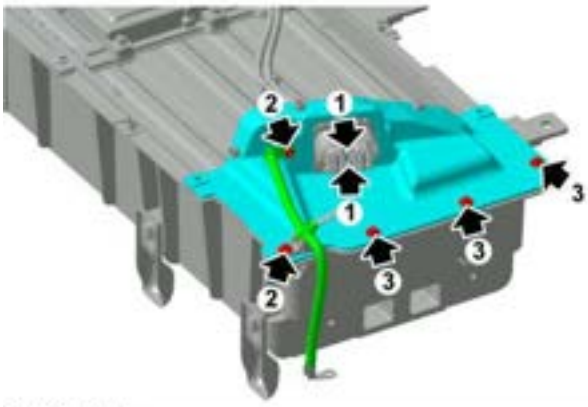

8. Remove 2 bolts (1) fixing the high-voltage plug to the high-voltage connection copper busbar, disconnect the harness connector (2) and remove the high-voltage plug.
9. Remove 1 bolt (3) fixing the harness ground to the high-voltage battery pack upper cover, and remove the harness.

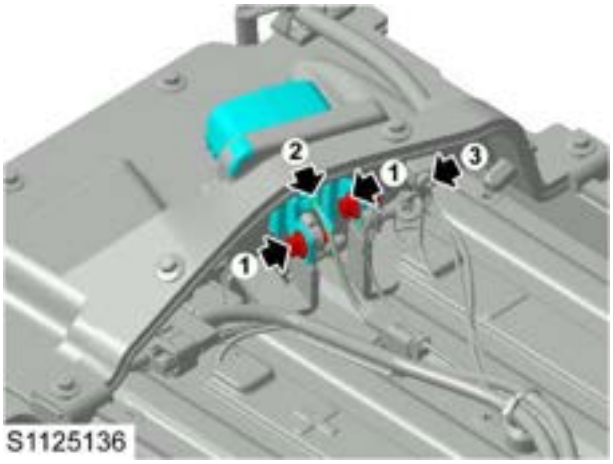

10. Remove the high-voltage battery pack upper cover 2 and high-voltage battery pack sealing cotton.

Refit

1. Clean the junction surface of the high voltage battery pack tray and upper cover.
2. Fit the high-voltage battery pack sealing cotton.
3. Fix the high-voltage battery pack upper cover 2 to the high-voltage battery pack. Fix the harness ground to the high-voltage battery pack upper cover, fit 1 bolt, tighten it to **6.5-7.5Nm** , and check the torque.
4. Fix the high-voltage plug to the high-voltage connection copper busbar, fit 2 bolts, tighten them to **9.5-10.5Nm** , and check the torque.
5. Connect the high-voltage plug harness connector.
6. Fix the high-voltage battery pack upper cover 2 to the high-voltage battery pack, fit 3 bolts, tighten them to **6.5-7.5Nm** , and check the torque.
7. Fix the high-voltage battery pack ground wire to the high-voltage battery pack, fit 2 screws, tighten them to **6.5-7.5Nm** , and check the torque.
8. Fix the high-voltage plug to the high-voltage battery pack upper cover, fit 2 bolts, tighten them to **5.5-6.5Nm** , and check the torque.
9. Fix the high-voltage battery pack upper cover 1 to the high-voltage battery pack, fit and tighten 18 bolts (numbers 7&8 are M5*25, and the rest are M5*20) in a proper order.

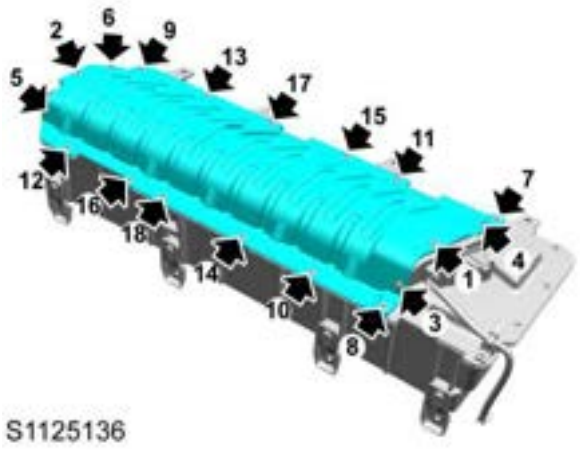

10. Fit the high-voltage battery.

HV Battery Pack Refit

11. Fit the manual service disconnect.

Manual Service Disconnect (MSD) Refit

12. Connect the negative battery cable.

Remove

1. Remove the battery pack upper cover.

☞ **Battery Pack Upper Cover Remove**

2. Remove 4 screws fixing the MSD plug to the high-voltage battery pack.

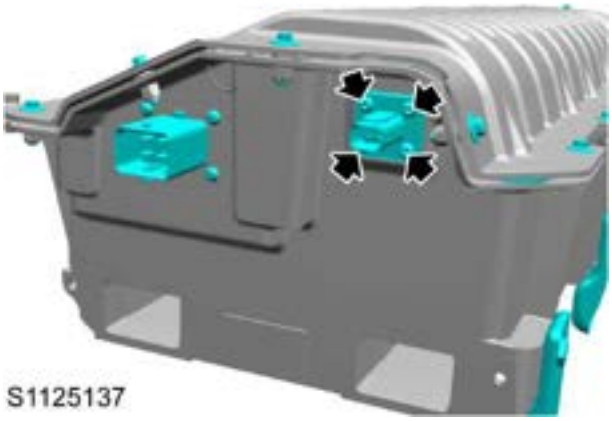

3. Disconnect the harness connector, loosen the harness clips and remove the MSD plug.

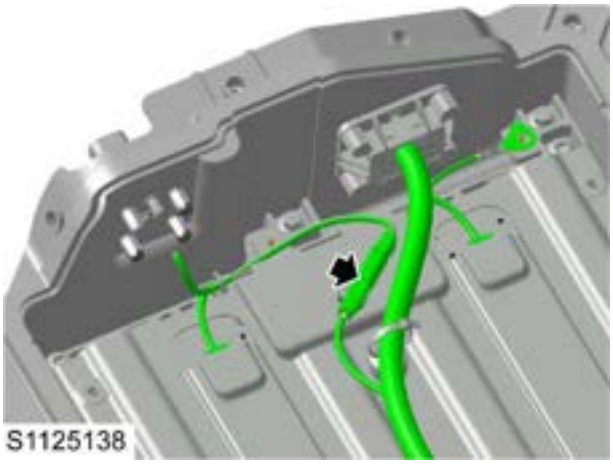

Refit

1. Connect the harness connector of the manual service disconnect and clamp the harness clips.
2. Fix the manual service disconnect plug to the high-voltage battery pack, fit 4 screws, tighten them to **2.5-3.5Nm** , and check the torque.
3. Fit the battery pack upper cover.

☞ **Battery Pack Upper Cover Remove**

Remove

1. Remove the battery pack upper cover.

☞ **Battery Pack Upper Cover Remove**

2. Disconnect the BCU low-voltage harness connector (1).
3. Remove 2 nuts (2) fixing the low-voltage harness connector ground terminal to the BCU bracket, loosen the harness clips from the bracket and remove the harness.
4. Remove 4 nuts (3) fixing the BCU to the bracket, and remove the BCU assembly and its bracket.

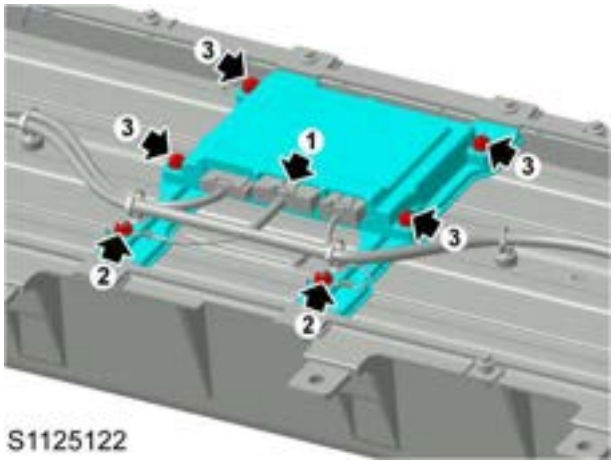

Refit

1. Fix the BCU to the bracket, fit 4 nuts, tighten them to **9.5-10.5Nm** , and check the torque.
2. Fix the harness to the bracket, and fix it with clips.
3. Fix the low voltage harness connector ground to the BCU bracket, fit 2 nuts, tighten them to **4-5Nm** , and check the torque.
4. Connect the BCU low voltage harness connector.
5. Fit the battery pack upper cover.

☞ **Battery Pack Upper Cover Remove**

6. Programme and encode the battery management system.

Remove

1. Remove the high-voltage connection copper busbar.

☞High-voltage Connection Copper Busbar Remove

2. Disconnect the harness connector (1) connecting the BDU harness to the BCU harness.
3. Remove 3 bolts (2) fixing the BDU harness ground to the BDU.

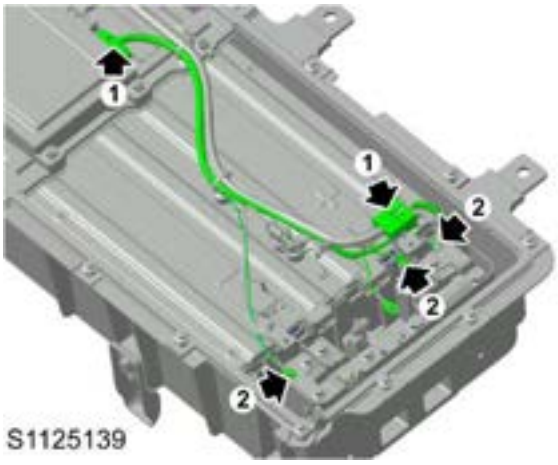

4. Remove 2 bolts (1) fixing the fuse box to the BDU, and remove the fuse box.
5. Remove 2 bolts (2) fixing the BDU to the high-voltage battery pack, and remove the BDU assembly and harness.

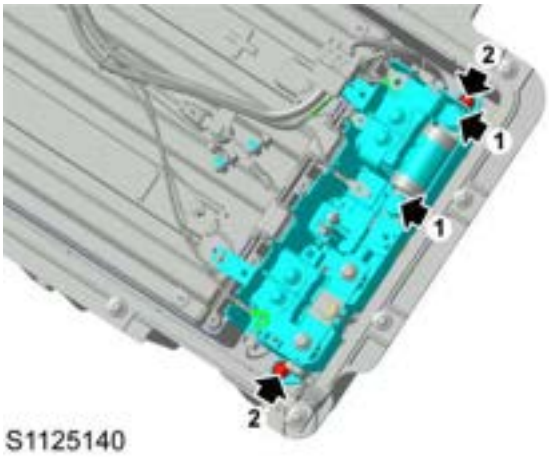

6. Remove 2 screws (1) fixing the resistor terminal to the BDU, and disconnect 4 harness connectors (2).
7. Disconnect the harness connector (3) connecting the BDU harness to the BDU.

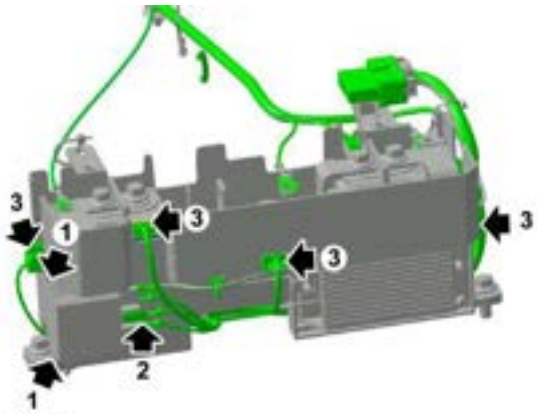

8. Remove the BDU assembly and harness respectively.

Refit

1. Connect the harness connector of the BDU harness to the BDU.
2. Connect the harness connector of the BDU harness to the resistance terminal.
3. Fix the resistance terminal to the BDU, fit 2 screws, tighten them to **1.8-2.7Nm** , and check the torque.
4. Fix the BDU to the high-voltage battery pack, fit 2 bolts, tighten them to **7.5-8.5Nm** , and check the torque.
5. Fix the fuse box to the BDU, fit 2 bolts, tighten them to **1-3Nm** , and check the torque.
6. Fix the BDU harness ground to the BDU, fit 3 bolts, tighten them to **3-4Nm** , and check the torque.
7. Connect the harness connector of the BDU harness to the BCU.
8. Fit the high-voltage connection copper busbar.

☞High-voltage Connection Copper Busbar Remove

Remove

1. Remove the battery pack upper cover.

☞ Battery Pack Upper Cover Remove

2. Remove 3 screws fixing the BDU upper cover to the BDU assembly, and remove the BDU upper cover.

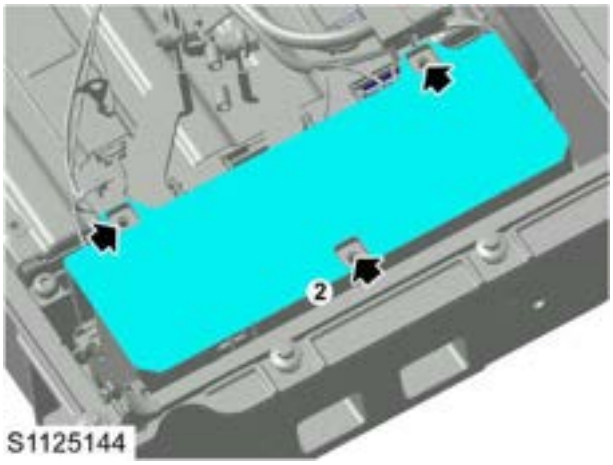

3. Remove the module protection cover.

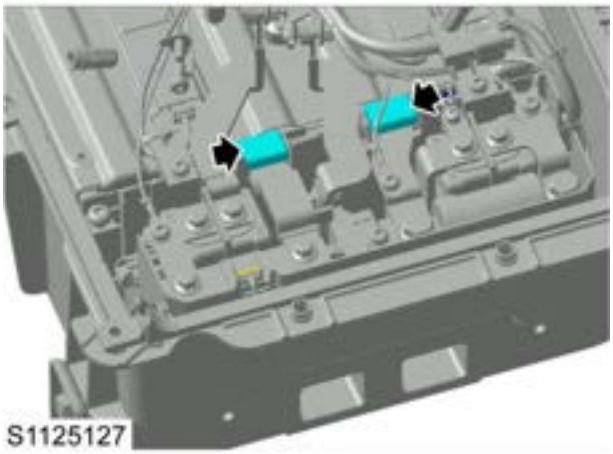

4. Remove 2 bolts (1) fixing the negative high-voltage connection copper busbar to the BDU, and remove the negative high-voltage connection copper busbar.
5. Remove 2 bolts (2) fixing the positive high-voltage connection copper busbar to the BDU.
6. Remove 1 bolt (3) fixing the harness ground to the positive high-voltage connection copper busbar, and remove the positive high-voltage connection copper busbar.

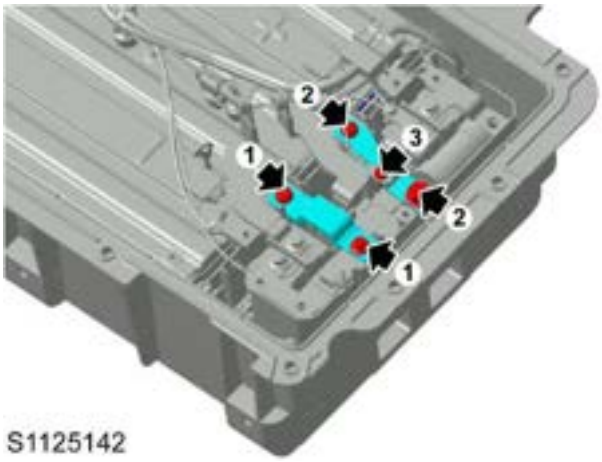

7. Fit the module protection cover.
8. Remove 1 bolt (1) fixing the harness ground to the P- copper busbar, and remove the harness.
9. Remove 1 bolt (2) fixing the P- copper busbar to the BDU, and remove the P- copper busbar.
10. Remove 1 bolt (3) fixing the P+ copper busbar to the BDU, and remove the P+ copper busbar.

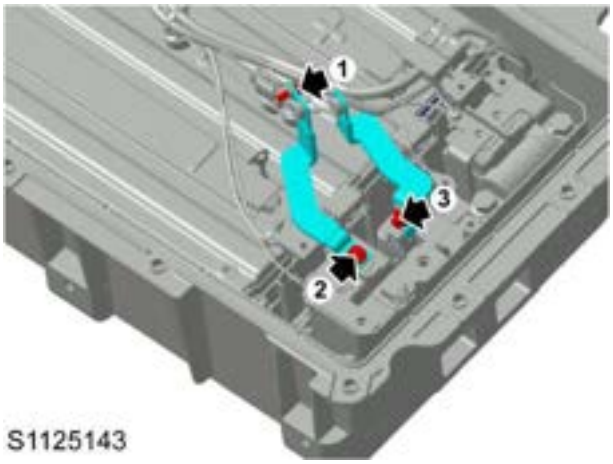

Refit

1. Fix the P+ copper busbar to the BDU, fit 1 bolt, tighten it to **9.5-10.5Nm** , and check the torque.
2. Fix the P- copper busbar to the BDU, fit 1 bolt, tighten it to **9.5-10.5Nm** , and check the torque.
3. Fix the harness ground to the P- copper busbar, fit 1 bolt, tighten it to **9.5-10.5Nm** , and check the torque.
4. Remove the module protection cover.
5. Fix the harness ground to the positive high-voltage connection copper busbar, fit 1 bolt, tighten it to **2.3-2.7Nm** , and check the torque.
6. Fix the positive high-voltage connection copper busbar to the BDU, fit 2 bolts, tighten them to **9.5-10.5Nm** , and check the torque.
7. Fit the module protection cover.
8. Fix the BDU upper cover to the BDU assembly, fit 3 screws, tighten them to **3-4Nm** , and check the torque.

9. Fit the battery pack upper cover. ☞ Battery Pack Upper Cover Remove

Remove

1. Remove the BDU assembly.

BDU Assembly

2. Remove the BCU assembly.

BCU Assembly

3. Disconnect the harness connector (1) of the module assembly.
4. Disconnect the harness connector (2) connecting the high-voltage plug to the module assembly.
5. Disconnect the harness connector (3) connecting the manual service disconnect plug to the module assembly.
6. Remove 1 bolt (4) fixing the harness ground to the module assembly.

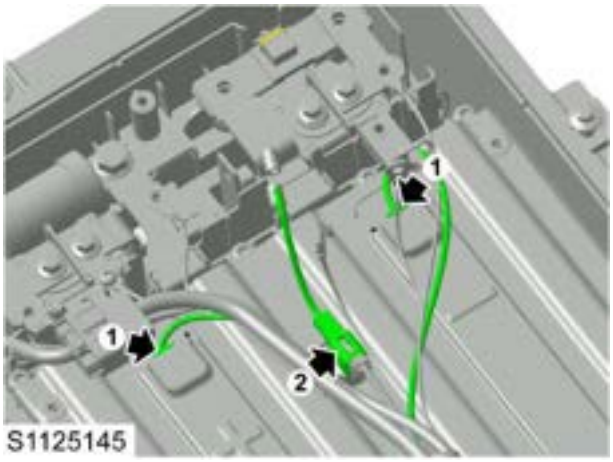

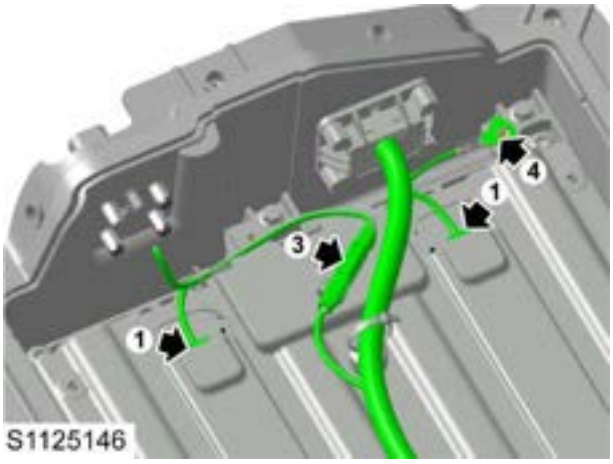

7. Remove 4 screws fixing the plug to the high-voltage battery pack.

8. Remove 8 screws (1) fixing the module assembly to the high-voltage battery pack base.
9. Remove 2 bolts (2) fixing the module lock blocks to the high-voltage battery pack, and remove the module lock blocks.

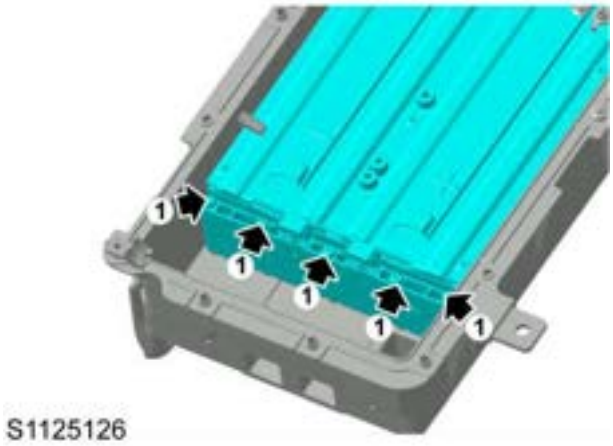

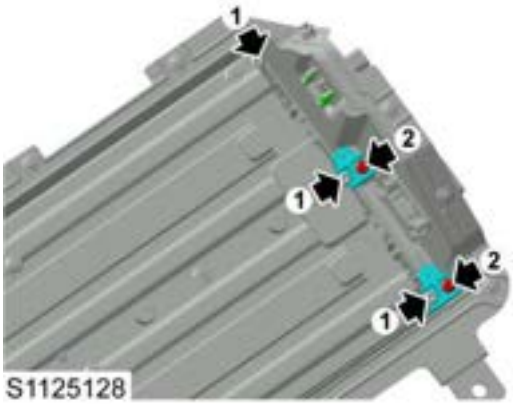

10. Remove the module assembly and harness respectively.

Refit

1. Carefully fix the module assembly to the base of the high voltage battery pack, keep the air duct seal under the module flat, fit 8 screws, tighten them to TBD, and check the torque.
2. Fix the module lock blocks to the high-voltage battery pack, fit 2 bolts, tighten them to **5.5-6.5Nm** , and check the torque.

3. Fix the plug to the high-voltage battery pack, fit 4 screws, tighten them to **1.5-1.7Nm** , and check the torque.
4. Fix the harness ground module assembly, fit 1 bolt, tighten it to **3-4Nm** , and check the torque.
5. Connect the manual service disconnect plug to the module assembly harness connector.
6. Connect the high-voltage plug to the module assembly harness connector.
7. Connect the module assembly harness connector.
8. Fit the BCU assembly.

BCU Assembly

9. Fit the BDU assembly.

BDU Assembly

Remove

1. Remove the module assembly.

Module Assembly

2. Remove the air duct seal ring.

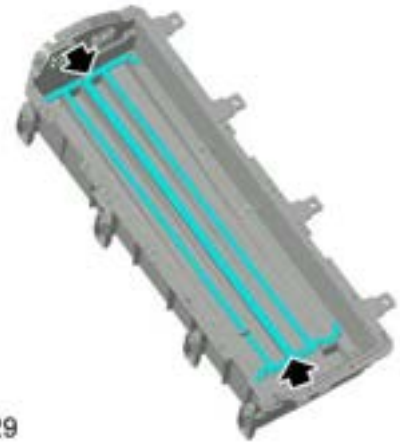

S1125129

3. Remove the air duct distribution panel.

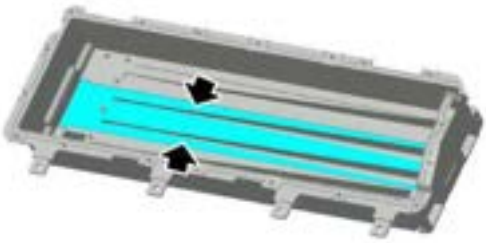

S1125131

4. Remove the seal ring & air duct lower foam.

S1125132

Refit

1. The box needs to be cleaned before refit to ensure that it is clean and free of foreign matter.
2. Fit the seal ring&air duct lower foam.
3. Fit the air duct distribution panel.
4. Fit the air duct seal ring.
5. Glue as shown in the figure (if necessary), glue length: 688±3mm, glue width: 12±2mm.

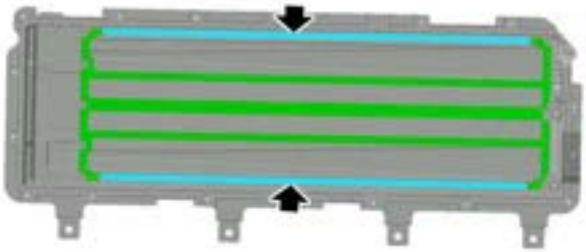

S1125141

6. Fit the module assembly.

Module Assembly

Battery pack base

Remove

1. Remove the air duct distribution panel.

Air Duct Distribution Panel

2. Remove 4 bolts fixing the bracket to the high-voltage battery pack, and remove the high-voltage battery pack bracket.

S1125132

3. Remove the high-voltage battery pack base.

Refit

1. Fix the bracket to the high-voltage battery pack, fit and tighten 4 bolts.
2. Fit the air duct distribution panel.

Air Duct Distribution Panel

Special Tool Summary Sheet

Special Tools

Tool Number	Description	Picture
TEL00052	Cover,msd connector	TEL00052

HV Harness

Specification

Torque

Description	Value
Nut-High voltage wiring harness to body bottom plate	5-7Nm
Bolt-High voltage harness to body	7-10Nm

Service Guide

HV Harness—HV Battery Pack

Remove

1. Disconnect the negative battery cable.
2. Remove the manual service disconnect.

☞ Manual Service Disconnect (MSD) Remove

3. Remove the rear seat cushion frame.

☞ Rear Seat Cushion Frame Remove

4. Remove the battery pack air inlet duct.

☞ Battery Pack Air Inlet Duct Remove

5. Disconnect the high-voltage harness connector (1) from the high-voltage battery pack.

Caution :

When repairing high-voltage components, please use suitable sheaths or insulating tape to cover the disconnected high-voltage connector ports to avoid foreign objects (including oil) from entering the high-voltage ports, which may cause damage, short-circuiting, insulation abnormality and other problems.

a. Move the lockout 1 toward the connector, and drag the connector pull ring 2 to the bottom.

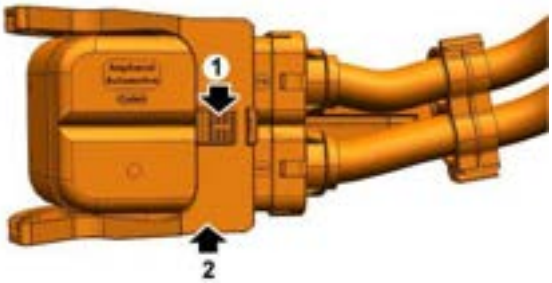

S1125134

6. Remove 1 bolt (2) fixing the high-voltage harness to the body.

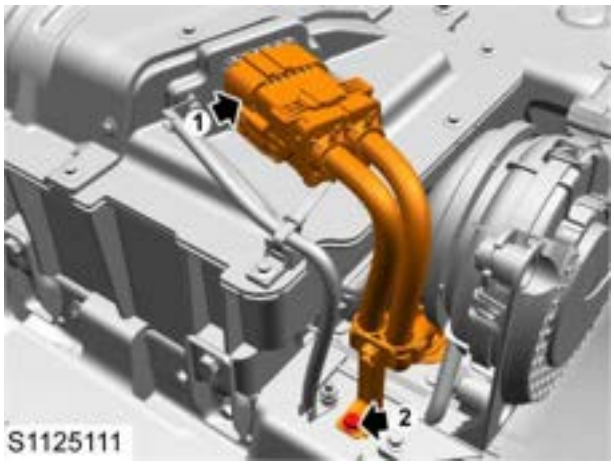

S1125111

7. Disconnect the high-voltage harness connector from the drive motor control module.

S1125113

Caution :

When repairing high-voltage components, please use suitable sheaths or insulating tape to cover the disconnected high-voltage connector ports to avoid foreign objects (including oil) from entering the high-voltage ports, which may cause damage, short-circuiting, insulation abnormality and other problems.

8. Raise the vehicle on a lift.

Warning :

9. Remove the left bottom deflector.

☞ Bottom Deflector Remove

10. Remove 2 nuts fixing the exhaust pipe heat shield to the body, and remove the exhaust pipe heat shield.

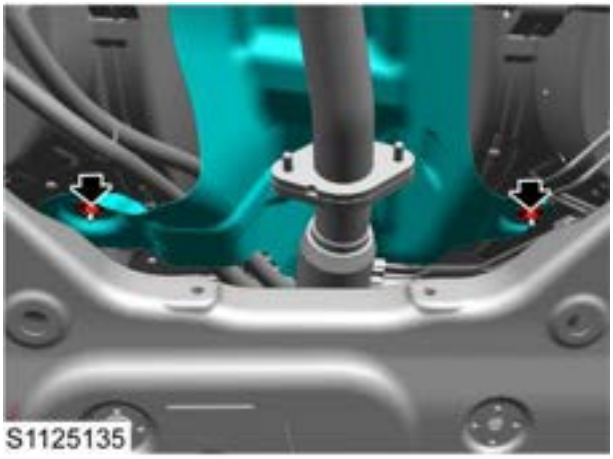

S1125135

11. Remove 4 nuts fixing the high-voltage harness to the underbody panel, and pull out the high-voltage harness.

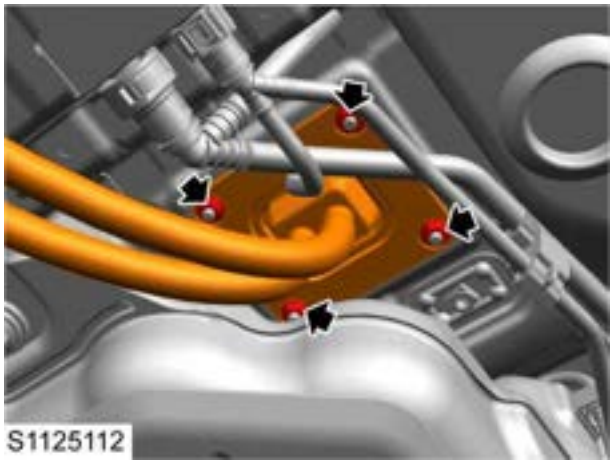

12. Cut off the clips, and remove the high-voltage battery pack HV harness.

Refit

1. Locate the high-voltage harness of high-voltage battery pack to the underbody and secure it with clips.
2. Fix the high-voltage harness to the underbody, fit 4 nuts, tighten them to **5-7Nm** and check the torque.
3. Fix the heat shield of the exhaust pipe to the body, fit and tighten 2 nuts.
4. Fit the left bottom deflector.

☞**Bottom Deflector Refit**

5. Lower the vehicle.
6. Connect the high voltage harness to the drive motor control module harness.
7. Fix the high voltage harness to the body, fit 1 bolt, tighten it to **7-10Nm** and check the torque.
8. Connect the high voltage harness to the high-voltage battery pack.
9. Fit the battery pack air inlet duct.

☞**Battery Pack Air Inlet Duct Refit**

10. Fit the rear seat cushion frame.

☞**Rear Seat Cushion Frame Refit**

11. Fit the manual service disconnect.

☞**Manual Service Disconnect (MSD) Refit**

12. Connect the negative battery cable.

HV Harness-Air Conditioning Compressor

Remove

1. Disconnect the negative battery cable.
2. Remove the manual service disconnect.

☞**Manual Service Disconnect (MSD) Remove**

3. Remove the air filter inlet pipe.

☞**Air Filter Inlet Pipe**

4. Disconnect the high-voltage harness connector from the drive motor control module.

a. Move the lock catch 1 toward the harness.
b. Press the lock catch 2, and pull toward the harness.
c. Press the lock catch 3, and pull toward the harness.

S1125133

Caution :
When repairing high-voltage components, please use suitable sheaths or insulating tape to cover the disconnected high-voltage connector ports to avoid foreign objects (including oil) from entering the high-voltage ports, which may cause damage, short-circuiting, insulation abnormality and other problems.

5. Disconnect the high-voltage harness connector from the A/C compressor.

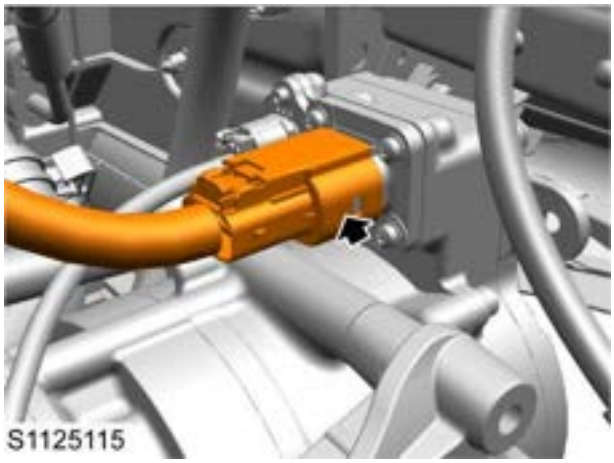

Caution :

When repairing high-voltage components, please use suitable sheaths or insulating tape to cover the disconnected high-voltage connector ports to avoid foreign objects (including oil) from entering the high-voltage ports, which may cause damage, short-circuiting, insulation abnormality and other problems.

6. Cut off the harness clip and remove the high-voltage harness of the A/C compressor.

Refit

1. Locate the electric A/C compressor high voltage harness in the front compartment and secure it with clips.
2. Connect the high voltage harness to electric A/C compressor.
3. Connect the high voltage harness to the drive motor control module.
4. Fit the air filter inlet pipe.

☞ **Air Filter Inlet Pipe**

5. Fit the manual service disconnect.

☞ **Manual Service Disconnect (MSD) Refit**

6. Connect the negative battery cable.

HV Battery Pack Cooling System

Service Guide

Remove

1. Remove the rear seat cushion assembly.

Rear Seat Cushion Assembly Remove

2. Remove 2 clips (1) fixing the battery pack air inlet duct to the body.
3. Remove 1 nut (2) fixing the battery pack air inlet duct to the body.
4. Disconnect the harness connector (3) from the battery pack air inlet duct.

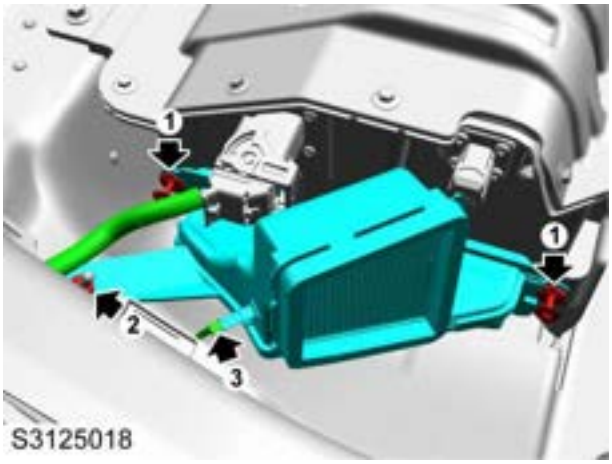

5. Loosen the clip, and remove the battery pack air inlet duct.

Refit

1. Fit the battery pack air inlet duct and secure it with clips.
2. Connect the harness connector of the battery pack air inlet duct.
3. Fix the battery pack air inlet duct to the body, fit 1 nut, tighten it to **4-6Nm** , and check the torque.
4. Fix the battery pack air inlet duct to the body, and secure it with clips.
5. Fit the rear seat cushion assembly.

Rear Seat Cushion Assembly Refit

Remove - A

1. Remove the power unit blower assembly.

Power Unit Blower Assembly Remove

2. Loosen the clip, and remove the battery pack air outlet duct.

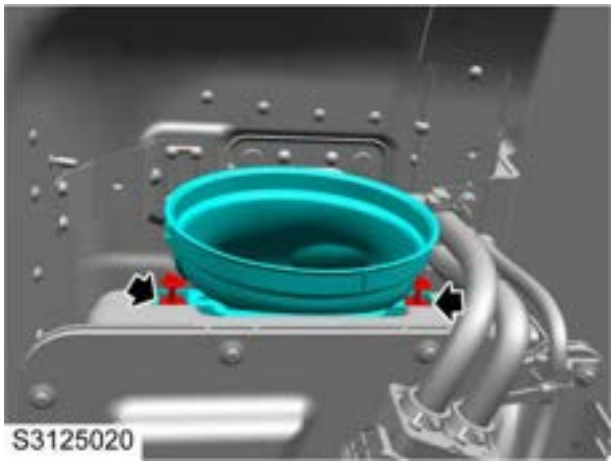

Refit - A

1. Fit the battery pack air outlet duct and secure it with clips.
2. Fit the power unit blower assembly.

Power Unit Blower Assembly Refit

Remove

1. Remove the rear seat cushion assembly.

☞**Rear Seat Cushion Assembly Remove**

2. Remove 2 bolts (1) fixing the power unit blower assembly to the body.
3. Disconnect the connector (2) from the power unit blower assembly.

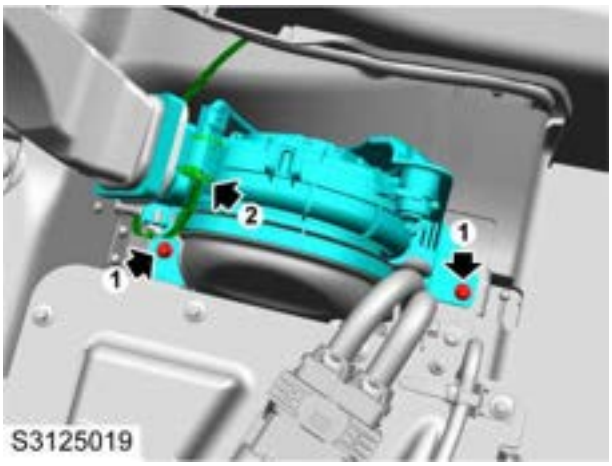

Refit

1. Fit the power unit blower assembly.
2. Connect the connector of the power unit blower assembly.
3. Fix the power unit blower assembly to the body, fit 2 bolts, tighten them **2-3Nm** , and check the torque.
4. Fit the rear seat cushion assembly.

☞**Rear Seat Cushion Assembly Refit**

Remove - B

1. Remove the rear seat cushion assembly.

☞Rear Seat Cushion Assembly Remove

2. Remove 2 nuts fixing the battery pack air outlet duct to the body, and remove the battery pack air outlet duct.

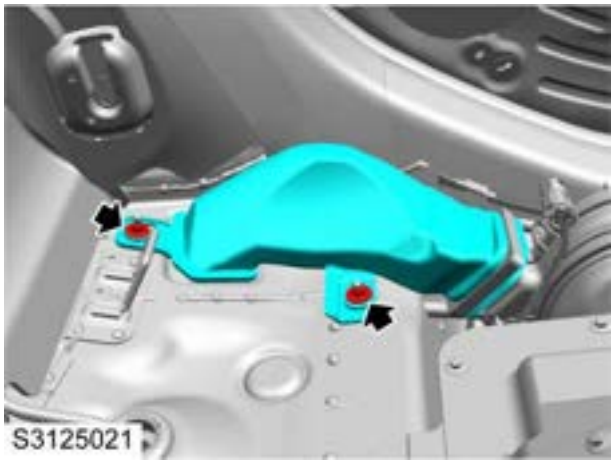

Refit - B

1. Fix the battery pack air outlet duct to the body, fit 2 nuts, tighten them **4-6Nm** , and check the torque.
2. Fit the rear seat cushion assembly.

☞Rear Seat Cushion Assembly Refit

A/C System-HEV

Specification

Torque

Description	Value
Bolt-Compressor bracket to ENG	19-25Nm
Bolt-Compressor to Compressor bracket	19-25Nm
Bolt-Evaporator pipe to Compressor	19-25Nm
Bolt-Compressor pipe to Compressor	19-25Nm
Nut-Evaporator pipe to Condenser	19-25Nm
Nut-Compressor pipe to Condenser	19-25Nm
Bolt-Evaporator pipe to Evaporator valve	19-25Nm
Nut-Air conditioner case assembly to Body	4-6Nm

Parameters

Refrigerant: Type Volume: Heat Pump: Non-heat Pump	R-1234yf or R-134a (select by region) 660±20 g 580±20 g
Compressor: Displacement Speed: Minimum Speed Maximum Speed Lubricating Oil: Refill Amount (new) High side operating voltage: Minimum Voltage Maximum Voltage Low side operating voltage: Relief Valve: Turn-on Pressure Turn-off Pressure	33 cc/rev 800 r/min 8500 r/min POE 150±10 g 160 V 490 V 12 V 3.8 ± 0.3 Mpa 3.01 Mpa (min)
System protection: 1.1 Evaporator Temperature - Non-heat Pump Compressor ON Compressor OFF 1.2 Refrigerant Pressure - Non-heat Pump Compressor ON Compressor OFF 2.1 Evaporator Temperature - Heat Pump Compressor ON Compressor OFF 2.2 Refrigerant Pressure - Heat Pump Compressor ON Compressor OFF	≥3 ℃ < 0 ℃ < 1.5 Mpa > 2.6 Mpa ≥5 ℃ < -1 ℃ < 1.8 Mpa > 2.45 Mpa

Amount of lubricating oil for replacement of A/C components
(parameters including oil recovered):

Lubricating Oil Type	HS1
Total Amount of Lubricating Oil	150±10 g
Compressor replacement	Remaining Lubricating Oil in the Original Compressor
Gas-liquid separator replacement	Remaining lubricating oil in the original gas-liquid separator
Evaporator replacement	30 g
Condenser replacement	30 g
Refrigerant pipeline replacement	30g for replacement of 1 pipe, 45g for replacement of 2 pipes, 60g for replacement of 3 or more pipes
Battery chiller replacement	30 g
Note: 1. large leak, cracked hose, impact or open relief valve can cause sudden loss of the refrigerant. Refrigerant leak or slow leak will not cause this degree of fluid loss. When replacing components which cause a huge loss of refrigerant, add an appropriate amount to specific components. 2. If the lost lubricant of the components exceeds the specified value, add as per the amount of loss.	

Description and Operation

System Layout

Air Duct

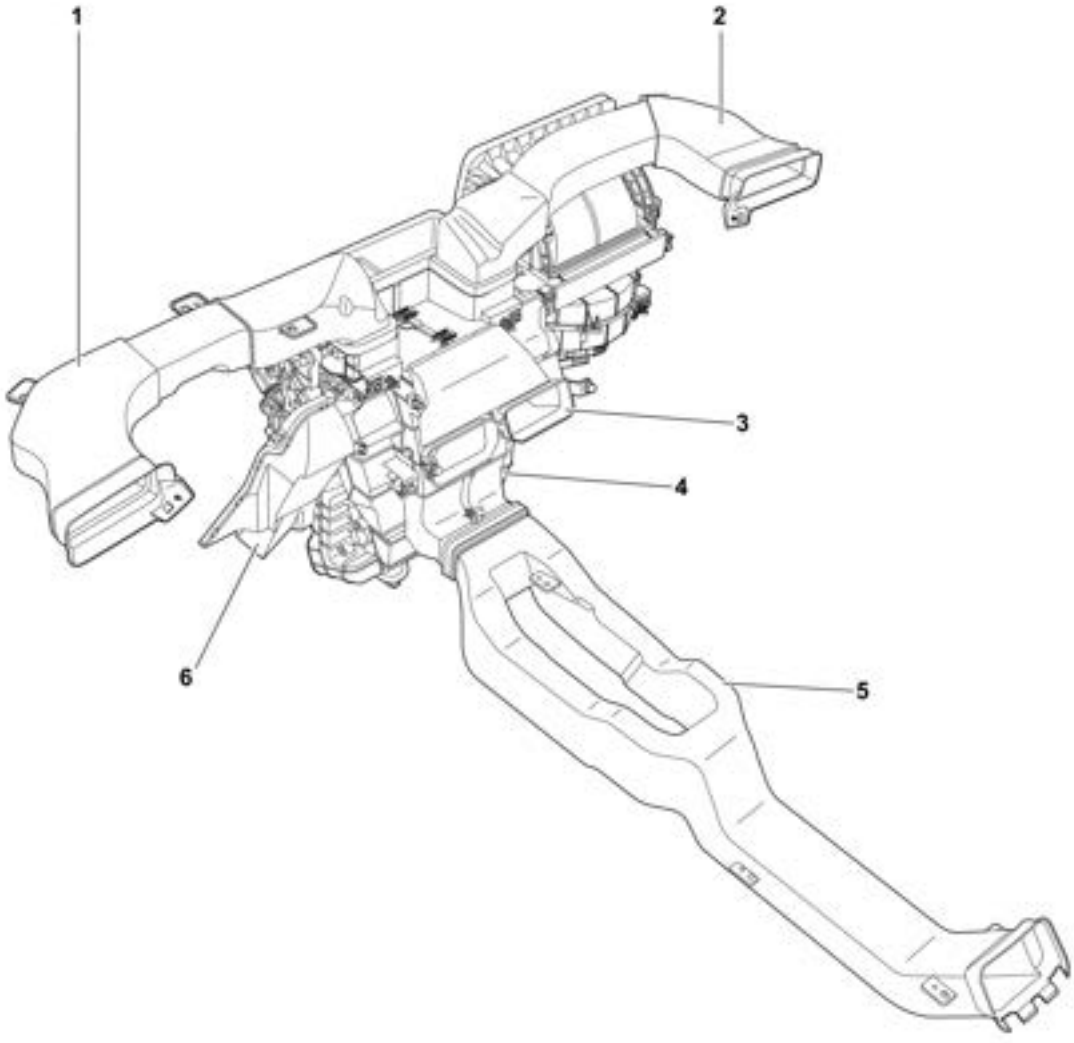

1. Left Face Air Duct
2. Defrost Air Duct
3. Right Face Air Duct
4. Instrument Panel Air Duct
5. Right Footwell Air Duct
6. Centre Console Air Duct
7. Left Footwell Air Duct

A/C Box

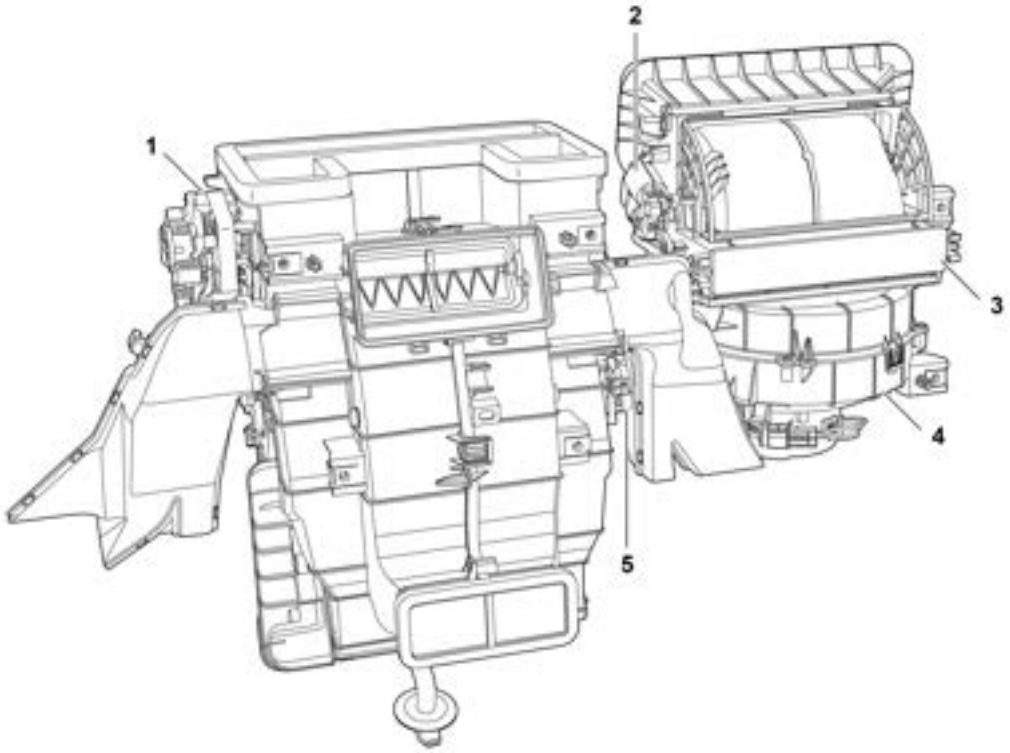

S3210159

1. Mode Damper Actuator
2. Recirculated Damper Actuator
3. A/C Filter
4. Blower Assembly
5. Temperature Damper Actuator

Cooling System

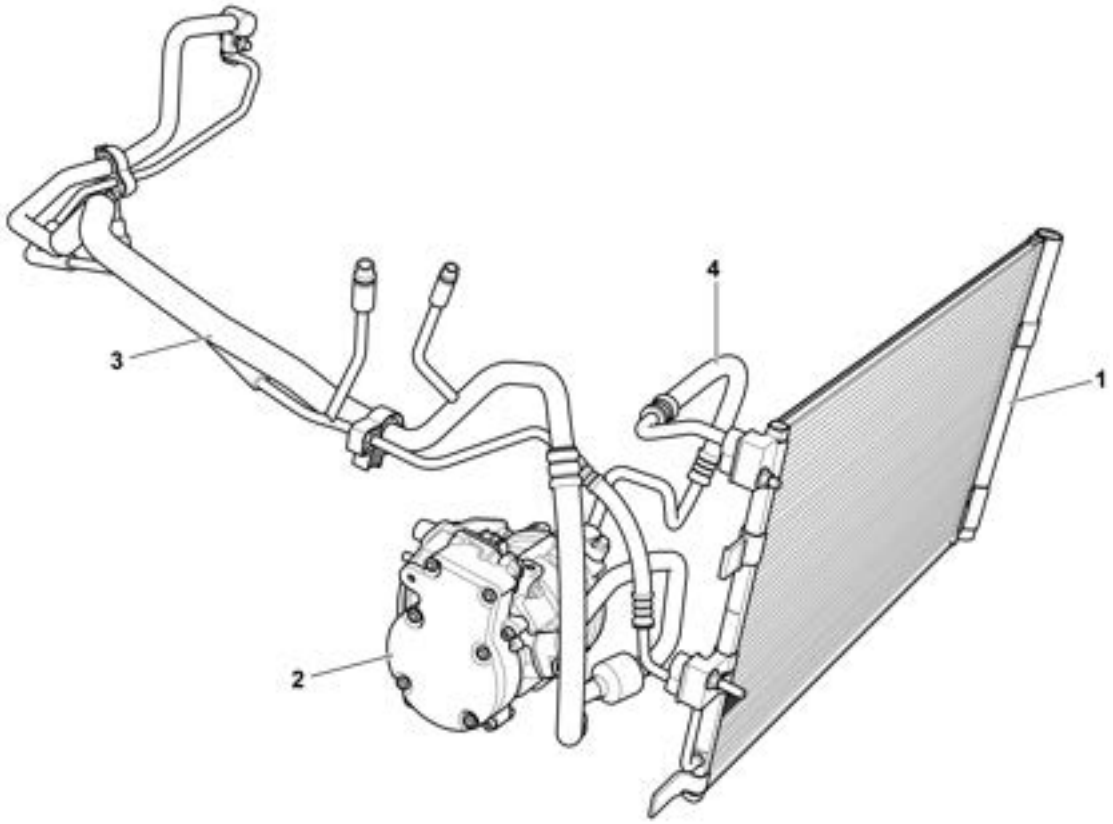

S3110294

1. Condenser
2. Compressor
3. Evaporator Pipeline Assembly
4. Compressor Pipeline Assembly

Description

Overview

Heating, Ventilation and Air Conditioning System (HVAC): it adjusts the interior temperature, humidity, cleanliness and air distribution, provide a comfortable ride environment for occupants and relieve travel fatigue; meanwhile, it creates a good working condition for driver to ensure safe driving.

According to the setting on the control panel or control interface, the blower provides power source, fresh air or interior air filtered by A/C filter flows through the A/C box before being heated or cooled, and supplies to the windshield or passengers via the air duct.

HVAC: it consists of the ventilation, refrigeration, heating and control unit. The system contains the A/C filter assembly, A/C box assembly (heater core, evaporator, etc.), air duct, A/C controller, control panel, etc.

According to models, the vehicle will be provided with different HVAC systems which can be divided roughly into:

- Manually controlled HVAC, whose damper is controlled with cables of the panel.
- Electronically controlled HAVC, whose damper is controlled with the actuator on the A/C box.
- Automatically controlled HAVC, whose damper is controlled with the actuator on the A/C box. Comparing with the electronically controlled HAVC, it has an automatic control mode. In the automatic mode, the system monitors and regulates the temperature, blower speed and air distribution automatically and does not need any manual interference.

The vehicle is equipped with automatic A/C across the entire configuration.

Ventilation Components and Heater Components

Ventilation components: A/C filter, A/C air duct, A/C box (housing, damper, damper actuator, blower) and body air outlet.

A/C Filter

The A/C air filter is used to improve the quality of the air supplied to the interior of the vehicle and filter fine particles such as dust and pollen, etc.

The A/C filter shall be checked on a regular basis, and replaced when necessary.

A/C Air Duct

The A/C air duct uses air as the transmission medium, which consists of the face air duct, footwell air duct and defrost air duct.

A/C Box Assembly

The A/C box assembly heats and distributes the fresh air or circulating air according to the mode selected on the control panel or control interface. The vehicle is equipped with front and rear A/C box assembly. The front A/C box is mounted under the instrument panel and the rear A/C box is mounted in the rear left interior trim panel. The A/C box assembly includes the blower, A/C filter, heater core, evaporator core and control damper. The passage in the A/C box assembly introduces air into the A/C box and divides it into three parts, and air is respectively delivered to the air outlets for the "face", "footwell" and "defrost". The condensed water flows to the outside from the drain pipe below the A/C box assembly.

The damper is in the A/C box, which controls the inlet air, outlet air temperature and position of the outlet air by turning the damper angle.

Recirculation damper: the damper cable or actuator drives the recirculation damper to open and close the fresh and recirculated air inlets so as to control the inlet air.

Temperature damper: the damper cable or actuator drives the temperature damper to vary the mixing ratio of the cold/warm air so as to control the temperature of the A/C outlet air.

Mode damper: the damper cable or actuator drives the mode damper to vary the air passing through the A/C box and air duct so as to meet the user's different needs, such as face, footwell, windshield, etc.

Blower

The blower is the power source of the whole ventilation system. Use the blower to drive interior air circulation or introduce fresh air into the vehicle.

The blower is in the A/C box assembly. Control of the blower air volume can be realized by using the air volume adjustment button on the control panel or control interface to control the blower speed control resistor of the A/C box assembly.

Body Air Outlet

Body air outlets are located at both sides of the trunk, which allows air in the passenger compartment to be discharged to the hidden area between the body and the rear bumper. The body air outlet is an effective check valve and each vent contains grille covered by soft rubber damper. The damper can open or close automatically according to the pressure difference between the passenger compartment and the external environment.

Heater Components

They provide heat for the A/C heating.

Heater Core

The heater core fitted in the A/C box assembly is an aluminum unidirectional flat-tube heat exchanger. Two aluminum tubes are fitted on the heater core, and they extend through the engine compartment wall and connect the heater core assembly to the engine coolant circulation system. When the engine works, coolant constantly flows through the heater core under the action of coolant pump.

The air is heated through the heater core and flows to the passenger compartment to achieve the function of heating.

Refrigeration Components

Schematic for cooling circulation

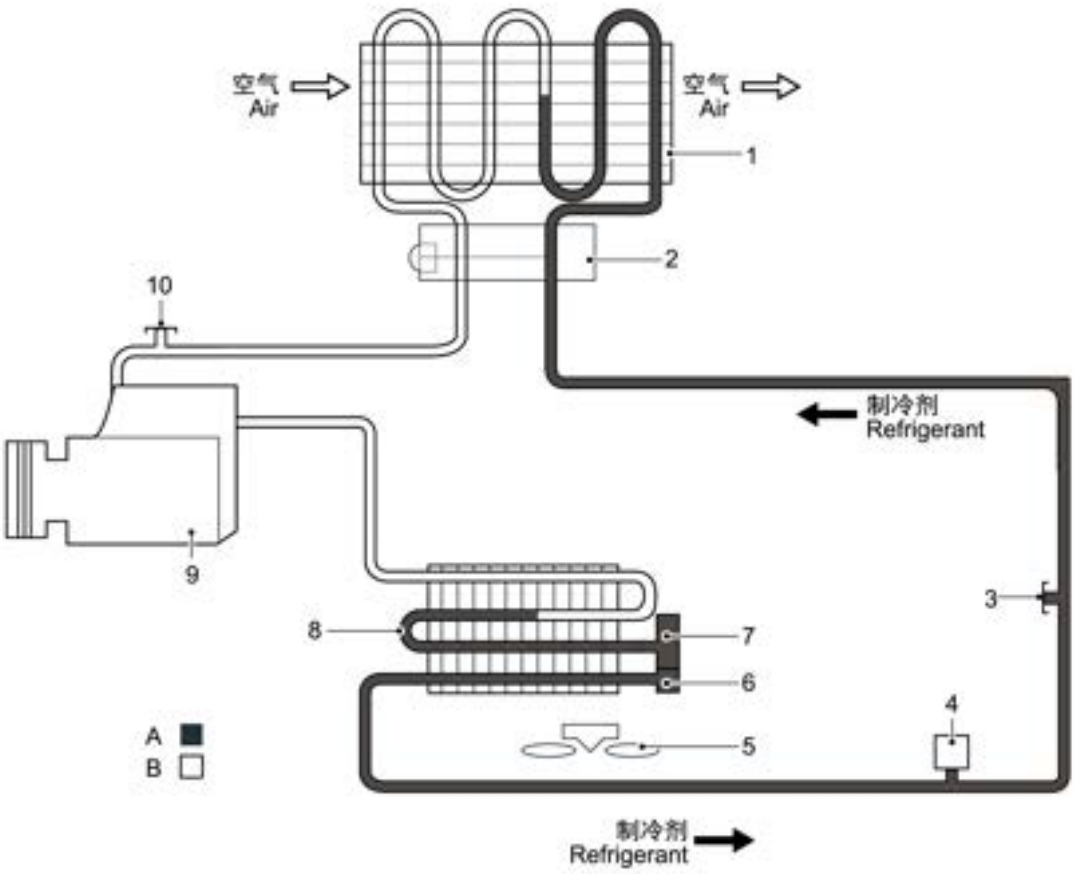

S3210101

A = Liquid Refrigerant; B = Gas Refrigerant

1. Front A/C Box Evaporator
2. Front A/C Box Expansion Valve
3. High Pressure Filling Port
4. Refrigerant Pressure Sensor
5. Cooling Fan
6. Condenser Filter
7. Condenser Desiccant
8. Condenser
9. Compressor
10. Low Pressure Filling Port

The refrigeration system transfers heat from the vehicle to the outside atmosphere and provides the A/C box assembly with dehumidified cool air. The system comprises a compressor, a condenser, an expansion valve (TXV), an A/C pipeline and an evaporator. The system is a closed loop which applies the refrigerant as the heat transfer medium. Add A/C oil to the refrigerant to lubricate the internal components of the compressor.

To accomplish the transfer of heat, the refrigerant is circulated around the system where it passes through two pressure/temperature modes. In each pressure/temperature mode, the state of the refrigerant changes. During this process, the refrigerant absorbs and releases maximum heat. The low pressure/temperature mode starts from the expansion valve, then goes through the evaporator to the compressor; the pressure and temperature of coolant decreases in the expansion valve, then it changes its state in the evaporator from mesothermal liquid to low temperature vapor to absorb heat from the air around the evaporator. The high pressure/temperature mode starts with the compressor, through the condenser to the expansion valve, the pressure and temperature of the refrigerant increase as it passes through the compressor, then it releases heat to the atmosphere via the condenser and changes from high temperature vapour to moderate-high temperature liquid.

Compressor

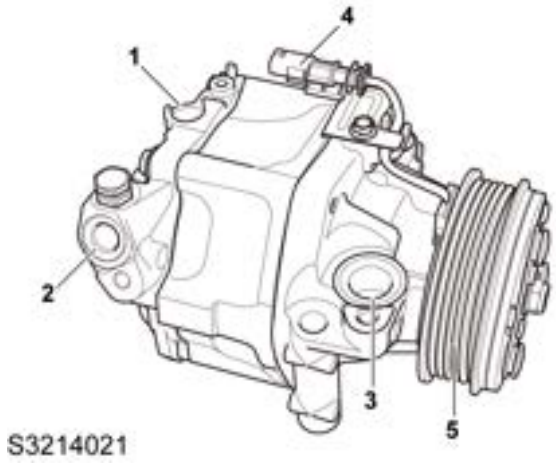

1. Pressure valve
2. Air Inlet
3. Exhaust Port
4. Clutch Plate Connector
5. Clutch Plate and Pulley

The compressor fitted on the engine is a variable displacement compressor. The compressor provides power for the whole refrigeration system.

Condenser

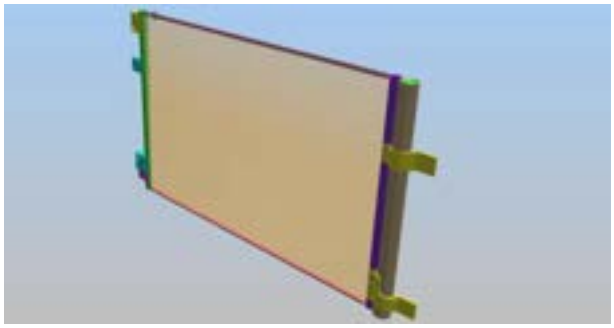

1. Refrigerant Air Inlet
2. Refrigerant Liquid Outlet

The condenser transfers the refrigerant heat into the ambient air and changes the refrigerant vapour from the compressor into liquid. The condenser also removes moisture and solid impurities from the refrigerant with its drying module and functions as a reservoir for liquid refrigerant so as to accommodate changes of heat load in the evaporator.

With the impact effect and/or cooling fan, the air passing through the heat exchanger absorbs heat from the refrigerant and changes the refrigerant from a vapour to liquid. The condenser cools and liquifies the refrigerant before it enters the modulator. In the modulator, most of the remaining gas in the refrigerant is separated. The refrigerant uses the desiccant and filter to remove moisture and particles before entering into the secondary cooler. The refrigerant is further cooled as it flows through the secondary cooler, this results in the refrigerant from the condenser outlet to the evaporator is almost 100% converted into liquid.

Evaporator

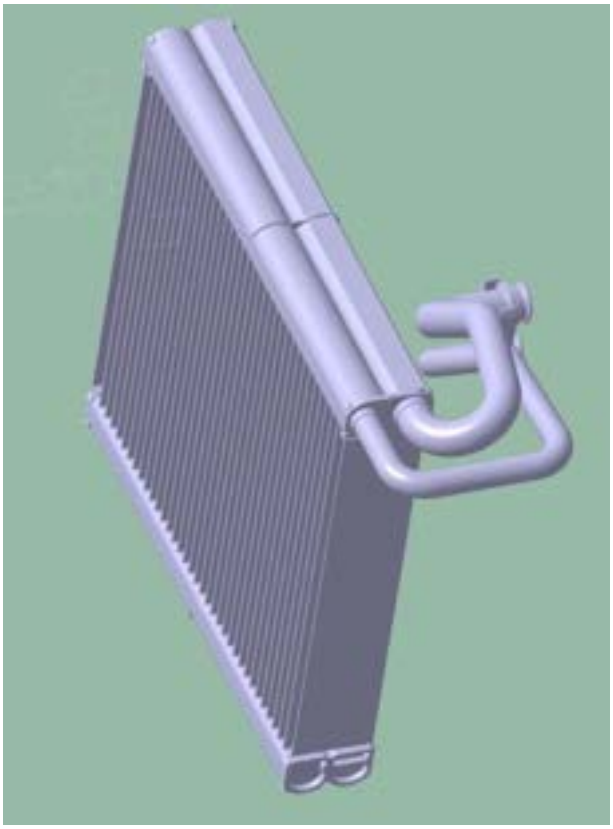

1. Evaporator Core
2. O-ring
3. Expansion Valve (TXV)
4. Expansion Valve Mounting Bolt

The evaporator is in the air inlet of the heater assembly and absorbs heat from the exterior or recirculated inlet air. Low pressure and low temperature refrigerant changes from liquid to vapour in the evaporator, absorbing large quantities of heat during this process.

The liquid coolant flows from the metering valve to the evaporator. The metering valve reduces the pressure and temperature of the refrigerant, changes the solid stream of refrigerant into a fine spray and improves the evaporation effect. As the refrigerant passes through the evaporator, it absorbs heat from the ambient air flowing through the evaporator core. The increase of the temperature causes the refrigerant to vaporize and increases its pressure.

The temperature and pressure of the refrigerant from the evaporator drive the diaphragm and temperature sensitive tube to move and regulate the metering valve opening, thereby controlling the volume of the refrigerant flowing through the evaporator. The warmer the air flowing through the evaporator core, the more heat available to evaporate refrigerant, which allows more refrigerant to pass through the metering valve.

Thermostatic Expansion Valve

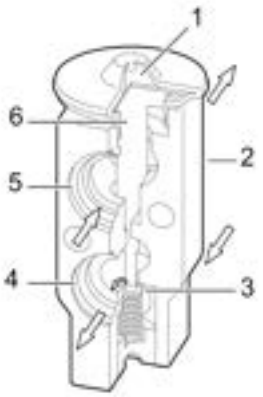

S462011

1. Diaphragm
2. Housing
3. Metering Valve
4. Inlet Passage to Evaporator
5. Outlet Passage from Evaporator
6. Temperature Sensitive Tube

The TXV regulates the flow of the refrigerant and matches the refrigerant flow with the heat load of the air passing through the evaporator core. The TXV is fitted on the inlet and outlet ports of the evaporator. The valve consists of an aluminum housing containing inlet and outlet passages. A metering valve is fitted in the inlet passage and the metering valve is controlled by a temperature sensitive tube connected to a diaphragm. The top of the diaphragm is filled with refrigerant and senses evaporator outlet pressure and the temperature sensitive tube senses evaporator outlet temperature. By regulating the opening of the thermostatic expansion valve, the force can be balanced, which keeps a proper degree of superheat for the evaporator outlet and balances the refrigerant flow and the thermal load of the air.

A/C Pipeline

Aluminum A/C pipelines connect the system components together with O-rings between the connections to ensure a secure seal. To maintain a similar flow velocity in the system, the diameter of the refrigerant lines may vary so as to suit the two pressure/temperature modes. The pipelines with larger diameters are fitted in the low pressure/temperature mode and those with smaller diameters are fitted in the high pressure/temperature mode, and integrate the refrigerant refill port into the A/C pipelines so as to facilitate the system service.

Description and Operation- ATC

System Layout

System Layout

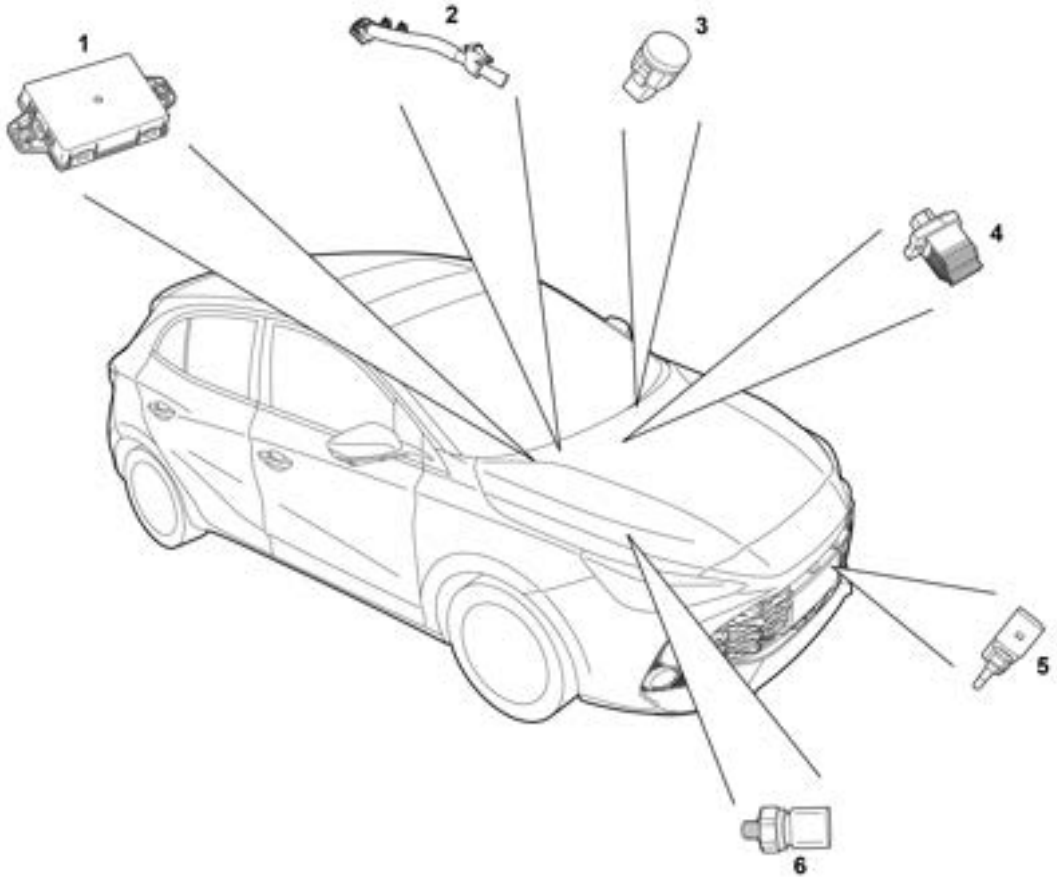

S3210161

1. A/C Controller
2. Evaporator temperature sensor
3. Solar Sensor
4. Blower Speed Regulation Resistor
5. Exterior Temperature Sensor
6. Refrigerant Pressure Sensor

System Control Diagram

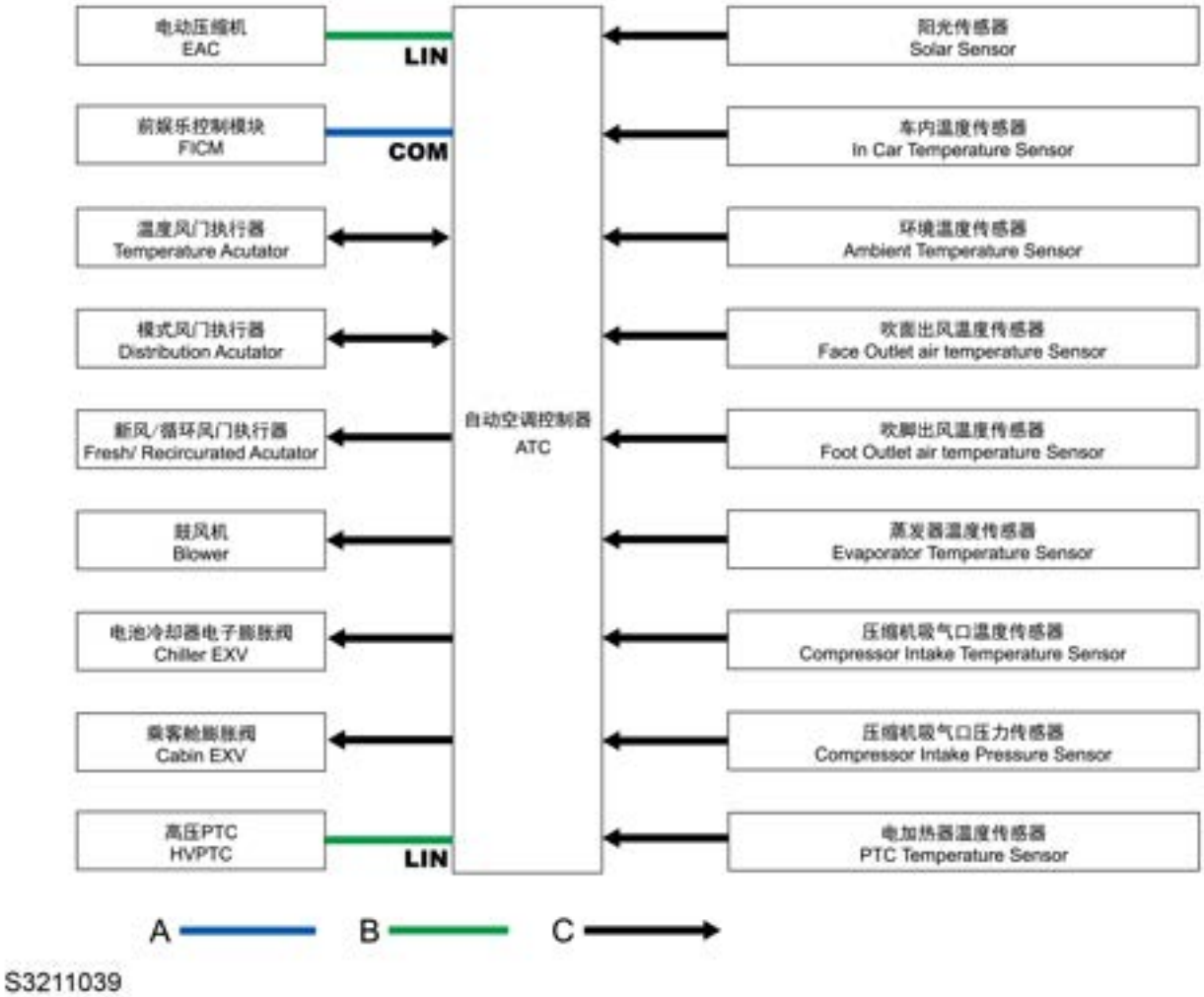

A = Comfort CAN Bus; B = LIN Bus; C = Hard Wire

Description

Overview

Select air volume, air temperature, air circulation, air distribution, etc. by operating the entertainment display or A/C control head. In the electronic A/C system, functions such as blower speed, air temperature, air circulation, air distribution, etc. are selected manually. The whole system consists of the following components:

- A/C Control Panel*
- A/C Control Head*
- A/C Controller
- A/C Pressure Sensor
- Evaporator Temperature Sensor
- Blower
- Damper actuator, etc.

Sensor

A/C Pressure Sensor

The A/C pressure sensor is fitted on the high pressure pipe of the cooling pipeline, which is used to monitor the pressure of the refrigerant, when the pressure is too small or too large, the compressor is requested off to protect the entire refrigerant circulation system.

Evaporator Temperature Sensor

The evaporator temperature sensor is located in the evaporator for measuring the surface temperature of the evaporator to prevent evaporator freezing. When the temperature monitored is lower than a certain value, the compressor will be required to be turned off.

Operation

Overview

The electric A/C controller operates according to the following inputs:

- Mode actuator position
- Temperature actuator position
- Blower speed
- Evaporator temperature value
- A/C pressure value

The A/C controller controls the followings according to manual settings on the display:

- Blower speed
- Position of mode damper actuator
- Temperature damper actuator position
- Position of internal/external recirculated air damper actuator

Air Volume Control

When the request of air volume change is shown on the A/C control panel/control interface, the A/C controller controls the speed of the blower motor by increasing or decreasing the voltage at the blower motor ground end with the blower speed regulation resistor.

Intake Source Control

When the request of intake air source change is shown on the A/C control panel, the A/C controller enables the internal/external circulation actuator to change the damper angle.

Temperature Control

When the request of temperature change is shown on the A/C control panel, the A/C controller enables the temperature actuator to change the damper angle.

Mode Control

When the request of mode change is shown on the A/C control panel, the A/C controller enables the mode actuator to drive the damper angle.

Compressor Control

When the cooling request is shown on the A/C control panel, the A/C controller receives the switch signal and transmits the signal to the ECM via the bus; the ECM engages the compressor clutch, meanwhile the engine accessory belt drives the compressor to operate, driving the refrigerant to circulate.

During the operation of compressor, the ECM may cut off the power supply of clutch in the following situations:

- Engine control module receives feedback from the pressure sensor, and the value is higher or lower than certain threshold;
- The ECM receives the temperature value from the A/C evaporator temperature sensor, and the value is lower than certain threshold;
- The ECM receives the request of acceleration.

Detailed Information List of Component Pins

A/C Controller Harness Connector

End View and Pin Information of ATC Harness Connector FA229

Pin No.	Description
1	KL30_1
2	GND1
3	SIG_GND1
4	SIG_PWR2
5	DRVServoMd_F_SIG
6	Local LIN1 (ECM/PICU)
7	-
8	ServoTem_RH_DRV-
9	ServoTem_RH_DRV+
10	ServoFresh_DRV
11	-
12	-
13	Blwr_F_FB+
14	Blwr_F_FB-
15	Blwr_F_HSD
16	ServoTem_RH_SIG
17	ServoMd_F_DRV+
18	ServoMd_F_DRV-
19	ServoRcctn_DRV
20	-

End View and Pin Information of ATC Harness Connector FA232

Pin No.	Description
1	-
2	-
3	-
4	RcctnFlap_SIG
5	-
6	-
7	-
8	-
9	-
10	-
11	-
12	-
13	SolarSnsr_L_SIG
14	FootDschrgAirTemSnsr_FL_SIG
15	-
16	FaceDschrgAirTemSnsr_FL_SIG
17	ITOS_NTC_SIG
18	ITOS_NTC_SIG
19	-
20	-

View and Pin Information of HVAC Harness Connector FA275

Pin No.	Description
1	IgnRelay
2	KL30
3	SIG_PWR2
4	HRWRelay_DRV
5	Blwr_F_FB-
6	Blwr_F_HSD
7	ServoTem_RH_DRV+
8	ServoTem_RH_DRV-
9	ACThreeStsPrsSw_LOWHIGH1
10	-
11	-
12	ServoMd_F_SIG
13	Illuminate
14	GND1
15	Blwr_F_FB+
16	ServoTem_RH_SIG
17	EvapoTemSnsr_SIG
18	SIG_GND1
19	-
20	GND2
21	ServoFresh_DRV
22	ServoRcctn_DRV
23	ServoMd_F_DRV+
24	ServoMd_F_DRV-

Service Guide - General Instructions

A/C System Odour Remove

1. When the A/C is started under hot and humid conditions, the smell may be blown out from the air outlets. The components that may produce the smell include:

- Foreign objects or breeding micro-organism in the A/C filter;
- Breeding micro-organism on the A/C box housing;
- Breeding micro-organism on the evaporator;
- Breeding micro-organism on the air duct;

2. In case of any smell, please observe the following steps for odour removal:

- Replace the A/C filter;
- Clean the A/C box housing;
- Clean the evaporator;
- Clean the A/C air ducts.

3. The relevant cleaning fluid may be used during cleaning:

- The solution containing 40% vinegar and 60% water;
- Proper cleanser, etc.

A/C Compressor Oil Balance

1. The lubricant in the compressor must be balanced during compressor replacement. The lubricating oil must go through balance treatment according to the following conditions:
2. Firstly, measure the oil volume in the replaced compressor, pour it out from the compressor intake/exhaust ports or the oil drain plug, measure with a measuring cup and record the value.

S3113709

S3113708

3. Pour out lubricant in the new compressor.
4. Add the amount of oil poured from the replaced compressor to the new compressor.

Refrigerant Recovery and Refill

Refrigerant Recovery

1. Connect the high-pressure side hose with a quick disconnection interface to the high-pressure service side connector of the A/C system.

Caution：Use a refrigerant tank designed only for service station. Overcharging restraint system is designed based on this kind of refrigerant tank. The tank valve is also designed for the restraint system.

2. Open the connector valve.
3. Connect the low pressure-side hose with a quick-disconnection connector to the low-pressure side maintenance connector of A/C system.
4. Open the connector valve.
5. Check the high pressure-side and low pressure-side gauges on the filling station control panel and ensure the A/C system is with pressure. There is recyclable refrigerant in the system if there is no pressure.
6. Open the high pressure-side and low pressure-side valves.
7. Open the gas and liquid valves on the refrigerant reservoir.
8. Drain refrigerant in the oil separator.
9. Close the drain valve.
10. Connect the refilling station to the appropriate power socket.
11. Connect the main power switch.

Caution：Reuse the recycled lubrication is prohibited. The recycled lubrication will damage the equipment.

Caution：Part of A/C lubrication (PAG) could be recycled together with refrigerant but service station can separate lubrication from refrigerant to calculate the quantity of lubrication.

12. Start the recovery process. For information about the refilling station, refer to the manufacturer's instructions for use.
13. Wait for 5 minutes before checking the low-pressure side gauge on the control panel. If the A/C system is capable of keeping vacuum, the recovery is completed.

Warning：If warning indicator illuminates, it means the tank is overfull and service station will stop, install a new empty tank to continue this process. The different type of tank is prohibited using.

14. If the pressure at the low-pressure side starts to rise from 0, there remains refrigerant in the system. Recover the residual refrigerant. Repeat this step until the system can keep vacuum for 2 minutes.

Air Conditioning System Drain

1. Check if the high pressure-side and low pressure-side hoses are connected to the A/C system. Open the high/low-pressure side valves on the refilling station control panel.
2. Open the gas and liquid valves on the refrigerant reservoir.

Caution：The evacuating procedure must be carried out before recharging process.

3. Start the vacuum pump and start the drain process. In the process of recirculation, non-condensable gases (mostly air) will be automatically exhausted from the reservoir. A sound of pressure release may be heard.
4. Check the system for leak. For information about the refilling station, refer to the manufacturer's instructions for use.

A/C System Lubricating Oil Refill and Supplementation

Tip：Different types of compressor lubricants can not be mixed.

At this time, the lubricating oil discharged from the A/C system during recovery must be supplemented.

Note:

- Always keep the lubricating oil bottle cap tight to prevent moisture or contaminants from entering the lubricating oil.
- This operation requires a vacuum A/C system. It is forbidden to open the lubricating oil filling valve when the A/C system is at positive pressure. This will result in backflow of lubricating oil through the bottle air vent.
- An oil level lower than the suction pipe is prohibited when refilling or supplementing lubricating oil; otherwise, air will enter the A/C system.

1. Use the special lubricating oil (contained in graduated bottle) for the system.
2. For information about the refilling station, refer to the manufacturer's instructions for use. Add an appropriate amount of lubricating oil to the A/C system.
3. When the oil refilled reaches the required point, close the valve.

Refrigerant Refill

Caution：The evacuating procedure must be carried out before recharging process.

Refrigerant Refill

Before refilling the refrigerant, the A/C system should be vacuumed. After the vacuuming procedure, observe the pressure value of the blue low-pressure gauge. If the pressure does not rise after 5 minutes, the system has successfully maintained the pressure and has no leakage, so that the refrigerant can be refilled.

1. Open the low-pressure side valve on the control panel.
2. Open the high-pressure side valve on the control panel.
3. For information about the refilling station, refer to the manufacturer's instructions for use.
4. Fill refrigerant of the required amount into the A/C, and ensure the unit of measurement is correct, for example, kg or lb.
5. Start the refill.

Refrigerant Refill Completion

1. Close the valve on the refilling station control panel. Both valves shall be closed.
2. Start the vehicle and A/C system.
3. Keep the compressor running until the readings on the high-pressure side pressure gauge and the low-pressure side pressure gauge are stable.
4. Compare the readings with the system specifications.
5. Check the outlet temperature of the evaporator, and ensure that the A/C system operation conforms to the system specifications.
6. Keep the A/C running.
7. Close the high-pressure side interface valve.
8. Disconnect the high-pressure side hose from the vehicle.
9. Open the low-pressure side valve on the control panel. The system will quickly suck in refrigerant from two hoses through the low-pressure side hose.
10. Close the low-pressure side interface valve.
11. Disconnect the low-pressure side hose from the vehicle.

Refrigerant Refill Failure

Sometimes, the refrigerant is not completely refilled into the A/C system. There are two reasons:

1. The pressure of the refrigerant reservoir in the refilling station is close to that of the A/C system,

- which leads to slow refrigerant delivery.
- For information about the refilling station, refer to the manufacturer's instructions for use.

2. There is not enough refrigerant in the refrigerant reservoir of the refilling station.
   - Therefore, part of the refrigerant refilled must be recovered from the vehicle, then drain the A/C system before refilling.
   - For information about the refilling station, refer to the manufacturer's instructions for use.

Air Conditioning System Seals

Remove

1. Remove the seal washer from the A/C refrigeration component.

Tip：Cap or tape the open A/C refrigerant components immediately to prevent system contamination.

2. Check the seal washer for any sign of damage to determine the root cause of the failure.
3. Check the A/C refrigeration components for damage or burrs. Repair if necessary.
4. Discard the seal washer.

Tip：DO NOT reuse O-ring seals.

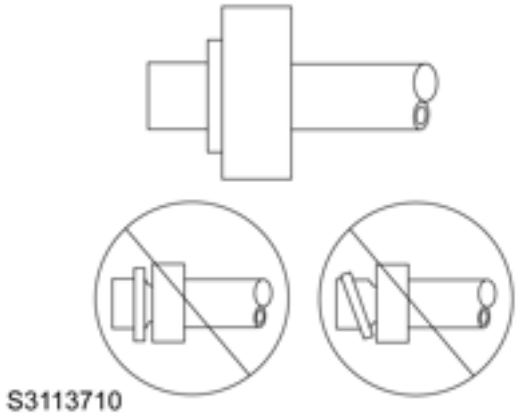

Refit

Tip：Flat washer type seals do not need lubrication either.

1. Check the new seal washer for any signs of cracks, cuts or damage. Do not use a damaged seal washer.
2. Remove the cap or tape from the A/C refrigeration components.
3. Using a lint-free clean, dry cloth, clean the sealing surfaces of the A/C refrigeration components.
4. Carefully fit the new seal washer onto the A/C refrigeration component. The washer must completely bottom against the surface of the fitting.
5. Assemble the remaining A/C refrigeration components. Refer to the appropriate service procedure(s).

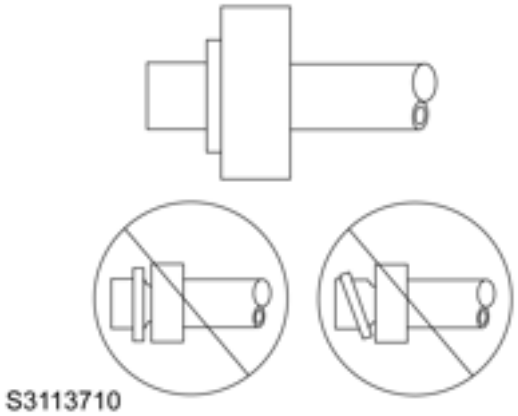

Air Conditioning System O-ring Replacement

Remove

1. Disassemble the A/C refrigeration components. Refer to the appropriate repair procedure.
2. Remove the O-ring from the A/C refrigeration component.
3. Check the O-ring for any sign of damage to help determine the root cause of the failure.
4. Check the A/C refrigeration components for damage or burrs. Repair if necessary.
5. Cap or tape the A/C refrigeration components.

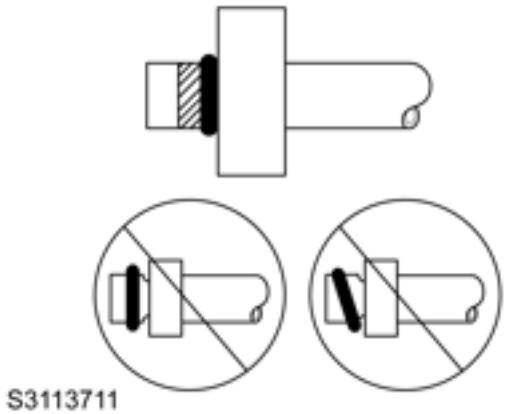

6. Discard the O-ring.

Refit

1. Check the new O-ring for any sign of cracks, cuts, or damage. Replace as needed.
2. Remove the cap or tape from the A/C refrigeration components.
3. Use a lint-free, clean and dry cloth to carefully clean the sealing surfaces of the A/C refrigeration components.
4. Apply a small amount of mineral-based 525 viscosity refrigerant oil to the new O-ring.
5. Carefully place the new O-ring into the A/C refrigeration component.
6. The O-ring seal must be fully seated.

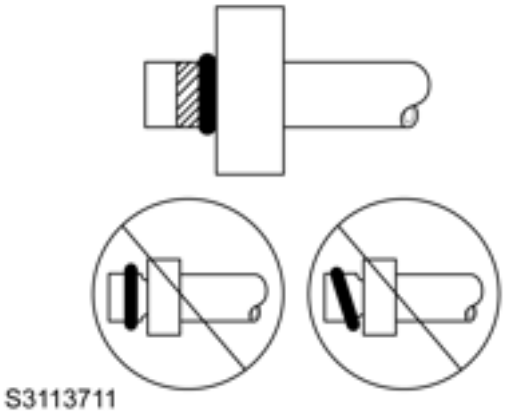

7. Assemble the A/C components. Refer to the appropriate service procedure(s).

Service Guide - Compressor/Condenser

Compressor

Remove

1. Remove the manual service disconnect.

☞Manual Service Disconnect (MSD) Remove

2. Recover the A/C system refrigerant.

☞Refrigerant Refrigerant Recovery Air Conditioning System Drain A/C System Lubricating Oil Refill and Supplementation Refrigerant Refill

3. Remove the bottom deflector.

☞Bottom Deflector Remove

4. Remove 1 bolt fixing the compressor pipeline assembly to the compressor, disconnect the pipeline, and discard the seal ring.

Caution：Protect the pollutants from entering the open joints.

5. Remove 1 bolt fixing the evaporator pipeline assembly to the compressor, disconnect the pipeline, and discard the seal ring.

Caution：Protect the pollutants from entering the open joints.

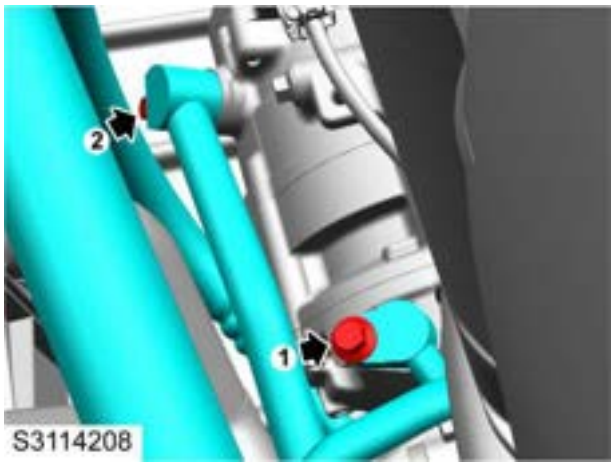

6. Disconnect the power battery high-voltage harness connector (1) from the compressor, and loosen the clip.
7. Disconnect the harness connector (2) from the compressor.

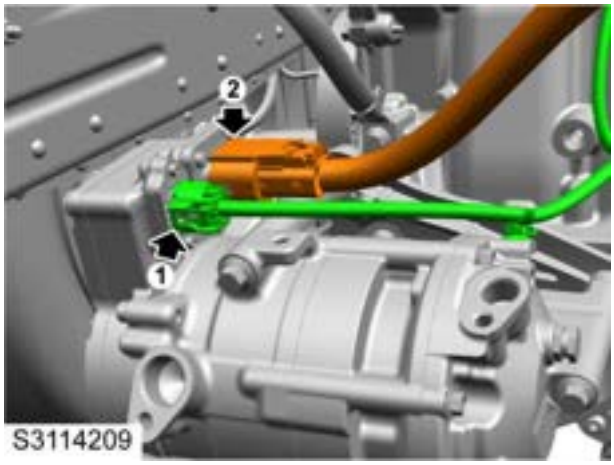

8. Remove 3 bolts fixing the compressor to the compressor bracket, and remove the compressor.

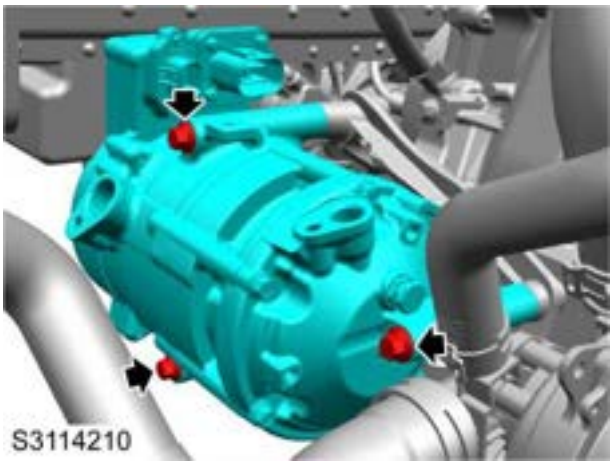

9. Remove 3 bolts fixing the compressor bracket to the engine assembly, and remove the compressor bracket.

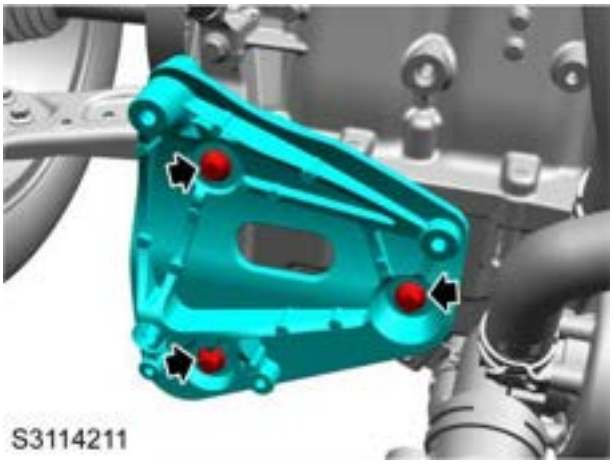

Refit

1. Fix the compressor bracket to the engine assembly, fit 3 bolts, tighten them to **19-25Nm** , and check the torque.
2. Fix the compressor to the compressor bracket, fit 3 bolts, tighten them to **19-25Nm** , and check the torque.
3. Connect the harness connector of the compressor.
4. Connect the power battery high voltage harness connector of the compressor, and secure it with clips.
5. Fit a new seal ring to the A/C pipeline, and apply clean compressor oil.
6. Fix the evaporator pipeline assembly to the compressor, fit 1 bolt, tighten it to **19-25Nm** , and check the torque.
7. Fit a new seal ring to the A/C pipeline, and apply clean compressor oil.
8. Fix the compressor pipeline assembly to the compressor, fit 1 bolt, tighten it to **19-25Nm** , and check the torque.
9. Fit the bottom deflector.

☞Bottom Deflector Refit

10. Refill the A/C system refrigerant.

Refrigerant Refrigerant Recovery Air Conditioning System Drain A/C System Lubricating Oil Refill and Supplementation Refrigerant Refill

11. Fit the manual service disconnect.

Manual Service Disconnect (MSD) Refit

Condenser

Remove

1. Remove the front-end module.

Front-end Module Remove

2. Recover the A/C system refrigerant.

Refrigerant Refrigerant Recovery Air Conditioning System Drain A/C System Lubricating Oil Refill and Supplementation Refrigerant Refill

3. Remove 1 nut fixing the compressor pipeline assembly to the condenser, disconnect the pipeline, and discard the seal ring.

Caution：Protect the pollutants from entering the open joints.

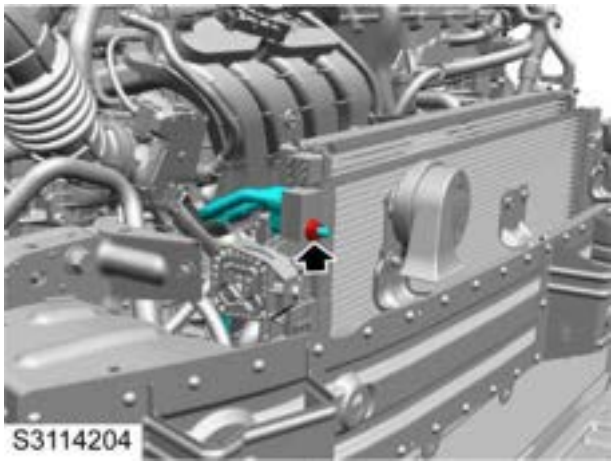

4. Remove 1 nut fixing the evaporator pipe assembly to the condenser, disconnect the pipeline, and discard the seal ring.

Caution：Protect the pollutants from entering the open joints.

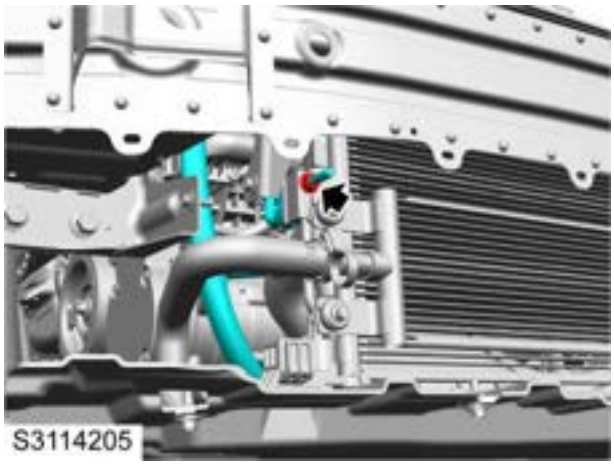

5. Loosen the clip fixing the condenser to the radiator assembly, and remove the condenser.

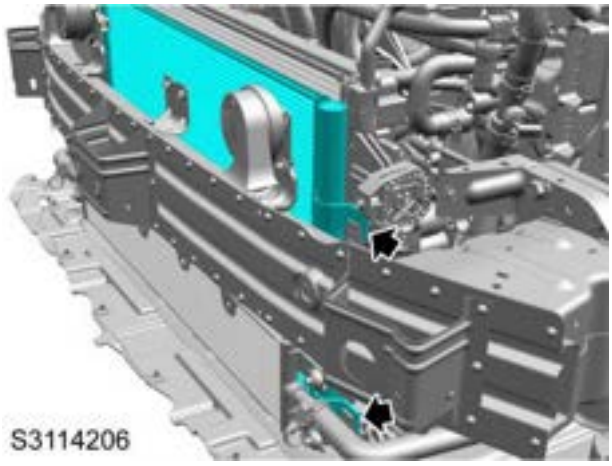

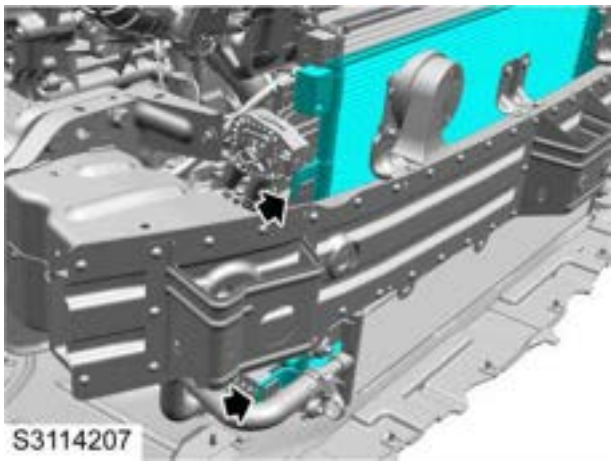

Refit

1. Fix the condenser to the radiator assembly, and secure it with clips.
2. Fit a new seal ring to the A/C pipeline, and apply clean compressor oil.
3. Fix the evaporator pipeline assembly to the condenser, fit 1 nut, tighten it to **19-25Nm** , and check the torque.
4. Fit a new seal ring to the A/C pipeline, and apply clean compressor oil.
5. Fix the compressor pipe assembly to the condenser, fit 1 nut, tighten it **19-25Nm** , and check the torque.
6. Refill the A/C system refrigerant.

☞**Refrigerant Refrigerant Recovery Air Conditioning System Drain A/C System Lubricating Oil Refill and Supplementation Refrigerant Refill**

7. Fit the front-end module.

☞**Front-end Module Refit**

Service Guide - Refrigerant Pipeline

Evaporator Pipeline Assembly

Remove

1. Disconnect the negative battery cable.
2. Recover the A/C system refrigerant.

☞Refrigerant Refrigerant Recovery Air Conditioning System Drain A/C System Lubricating Oil Refill and Supplementation Refrigerant Refill

3. Remove the engine mount.

☞Powertrain Mount Remove

4. Remove the bottom deflector.

☞Bottom Deflector Remove

5. Disconnect the connector of the A/C pressure switch.
6. Remove 1 bolt fixing the A/C evaporator pipeline assembly to the expansion valve, disconnect the pipeline, and discard the seal ring.

Caution：Protect the pollutants from entering the open joints.

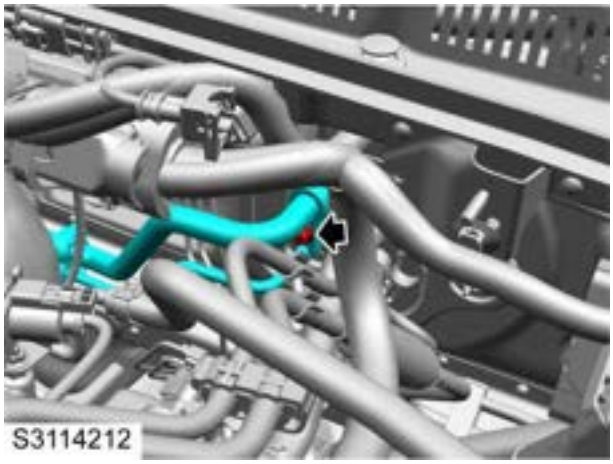

7. Remove 1 bolt fixing the A/C evaporator pipeline assembly to the compressor, disconnect the pipeline, and discard the seal ring.

Caution：Protect the pollutants from entering the open joints.

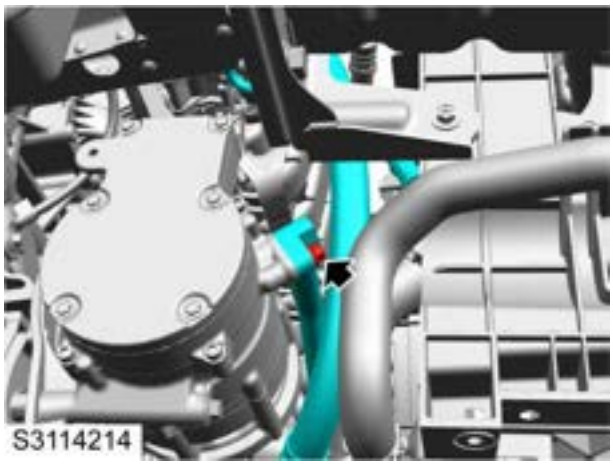

8. Remove 1 nut fixing the A/C evaporator pipeline assembly to the condenser, disconnect the pipeline, and discard the seal ring.

Caution：Protect the pollutants from entering the open joints.

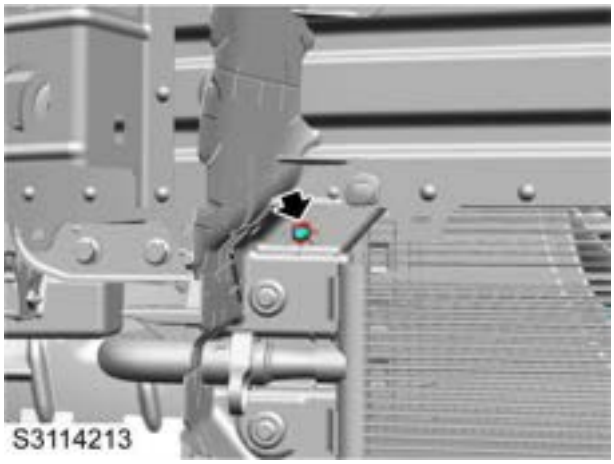

9. Loosen the clip, and remove the evaporator pipeline assembly.

Refit

1. Fit the evaporator pipe assembly and secure it with clips.
2. Fit a new seal ring to the A/C pipeline, and apply clean compressor oil.
3. Fix the A/C evaporator pipeline assembly to the condenser, fit 1 nut, tighten it to **19-25Nm** , and check the torque.
4. Fit a new seal ring to the A/C pipeline, and apply clean compressor oil.
5. Fix the A/C evaporator pipeline assembly to the compressor, fit 1 bolt, tighten it to **19-25Nm** , and check the torque.
6. Fit a new seal ring to the A/C pipeline, and apply clean compressor oil.
7. Fix the A/C evaporator pipeline assembly to the expansion valve, fit 1 bolt, tighten it to **19-25Nm** , and check the torque.
8. Connect the connector of the A/C pressure switch.
9. Fit the bottom deflector.

☞Bottom Deflector Refit

10. Fit the engine mount.

☞Powertrain Mount Refit

11. Refill the A/C system refrigerant.

☞Refrigerant Refrigerant Recovery Air Conditioning System Drain A/C System Lubricating Oil Refill and Supplementation Refrigerant Refill

12. Connect the negative battery cable.

A/C Refrigerant Pressure Sensor

Remove

1. Disconnect the negative battery cable.
2. Recover the A/C system refrigerant.

☞Refrigerant Refrigerant Recovery Air Conditioning System Drain A/C System Lubricating Oil Refill and Supplementation Refrigerant Refill

3. Remove the air filter assembly.

☞Air Filter Assembly

4. Disconnect the connector of the A/C pressure sensor.

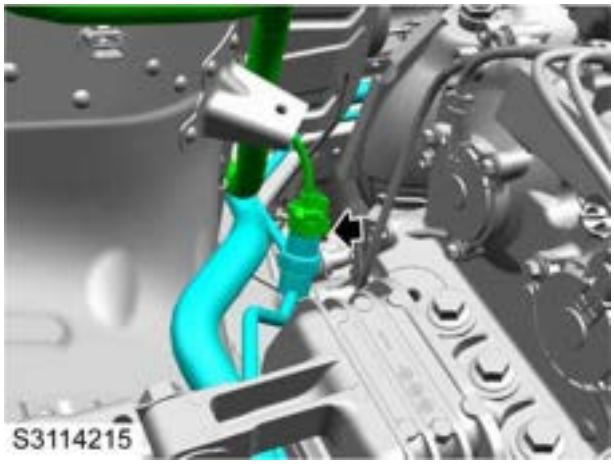

5. Remove the A/C pressure sensor from the A/C pipeline and discard the O-ring.

Refit

1. Remove the plug, lubricate the new O-ring with clean A/C lubricating oil and fit the O-ring to the A/C pressure sensor.
2. Fit and secure the A/C pressure sensor to the A/C pressure pipe.
3. Fit the air filter assembly.

☞Air Filter Assembly

4. Refill the A/C system refrigerant.

☞Refrigerant Refrigerant Recovery Air Conditioning System Drain A/C System Lubricating Oil Refill and Supplementation Refrigerant Refill

5. Connect the negative battery cable.

Remove

1. Disconnect the negative battery cable.
2. Recover the A/C system refrigerant.

☞Refrigerant Refrigerant Recovery Air Conditioning System Drain A/C System Lubricating Oil Refill and Supplementation Refrigerant Refill

3. Remove the front bumper.

☞Front Bumper Remove

4. Remove the air filter inlet pipe.

☞Air Filter Inlet Pipe

5. Remove 1 bolt fixing the compressor pipeline assembly to the compressor, disconnect the pipeline, and discard the seal ring.

Caution：Protect the pollutants from entering the open joints.

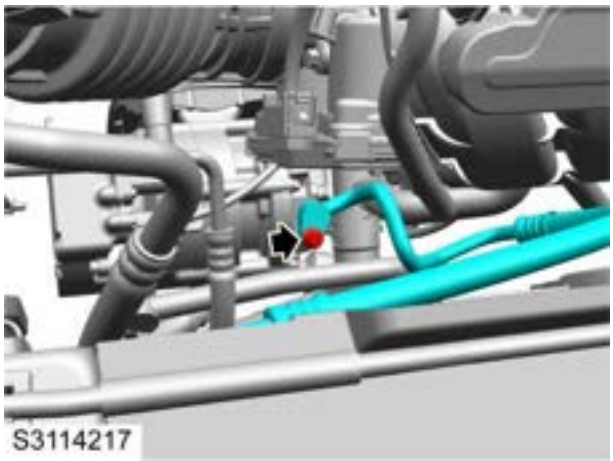

6. Remove 1 nut fixing the compressor pipeline assembly to the condenser, disconnect the pipeline, and discard the seal ring.

Caution：Protect the pollutants from entering the open joints.

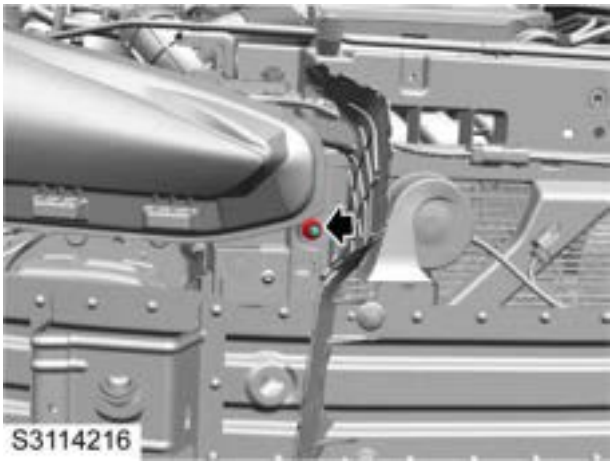

7. Remove the compressor pipeline assembly.

Refit

1. Fit the compressor pipeline assembly.
2. Fix the compressor pipe assembly to the condenser, fit 1 nut, tighten it **19-25Nm** , and check the torque.
3. Fix the compressor pipeline assembly to the compressor, fit 1 bolt, tighten it to **19-25Nm** , and check the torque.
4. Fit the air filter inlet pipe.

☞Air Filter Inlet Pipe

5. Fit the front bumper.

☞Front Bumper Refit

6. Refill the A/C system refrigerant.

☞Refrigerant Refrigerant Recovery Air Conditioning System Drain A/C System Lubricating Oil Refill and Supplementation Refrigerant Refill

7. Connect the negative battery cable.

Service Guide - A/C Box

A/C Box Assembly

Remove

1. Disconnect the negative battery cable.
2. Drain the coolant.

☞Coolant Drain - ENG Refill - ENG Drain Refill

3. Recover the A/C system refrigerant.

☞Refrigerant Refrigerant Recovery Air Conditioning System Drain A/C System Lubricating Oil Refill and Supplementation Refrigerant Refill

4. Remove the instrument panel beam assembly.

☞Instrument Panel Beam Assembly Remove

5. Loosen the clamp (1) and disconnect the cooling pipeline from the A/C box.
6. Remove 1 bolt (2) fixing the A/C evaporator pipe assembly to the expansion valve, disconnect the pipeline, and discard the seal ring.

Caution：Protect the pollutants from entering the open joints.

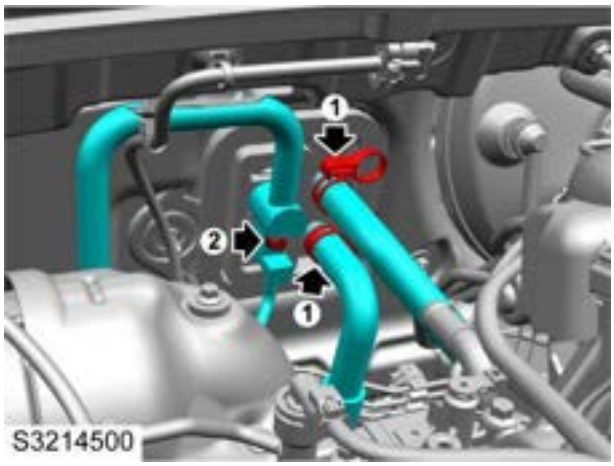

7. Remove 1 nut fixing the A/C box to the body.

8. Disconnect the connector from the A/C box.
9. Loosen the clip and remove the A/C box assembly.

Refit

1. Fit the A/C box assembly and secure it with clips.
2. Connect the connector of the A/C box.
3. Fix the A/C box to the body, fit 1 nut, tighten it to **4-6Nm** , and check the torque.
4. Fit a new seal ring to the A/C pipeline, and apply clean compressor oil.
5. Fix the A/C evaporator pipeline assembly to the expansion valve, fit 1 bolt, tighten it to **19-25Nm** , disconnect the pipeline, and discard the seal ring.
6. Fix the hose of cooling pipeline to the A/C box and secure it with clamps.
7. Fit the instrument panel beam assembly.

☞Instrument Panel Beam Assembly Refit

8. Refill the A/C system refrigerant.

☞Refrigerant Refrigerant Recovery Air Conditioning System Drain A/C System Lubricating Oil Refill and Supplementation Refrigerant Refill

9. Refill the coolant.

☞Coolant Drain - ENG Refill - ENG Drain Refill

10. Connect the negative battery cable.
11. Perform the self-learning for the A/C damper actuator.

☞ Heating, Ventilation and Air Conditioning Control Module (HVAC)

Air Filter Cover

Remove

1. Remove the glove box assembly.

☞Glove Box Assembly Remove

2. Loosen the clip, and remove the air filter cover.

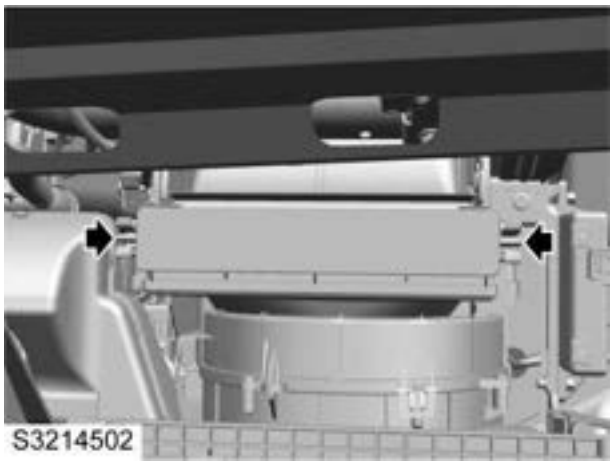

Refit

1. Fit the air filter cover and secure it with clips.
2. Fit the glove box assembly.

☞Glove Box Assembly Refit

Pollen Filter

Remove

1. Remove the air filter cover.

Air Filter Cover Remove

2. Pull out the pollen filter.

Refit

1. Fit the pollen filter.
2. Fit the air filter cover.

Air Filter Cover Refit

Blower Speed Control Resistor

Remove

1. Disconnect the negative battery cable.
2. Remove the instrument panel lower closure panel.

☞ **Instrument Panel Lower Closure Panel Remove**

3. Disconnect the connector (1) of the blower speed regulation resistor.
4. Remove 2 screws (2) fixing the blower speed regulation resistor to the A/C box.

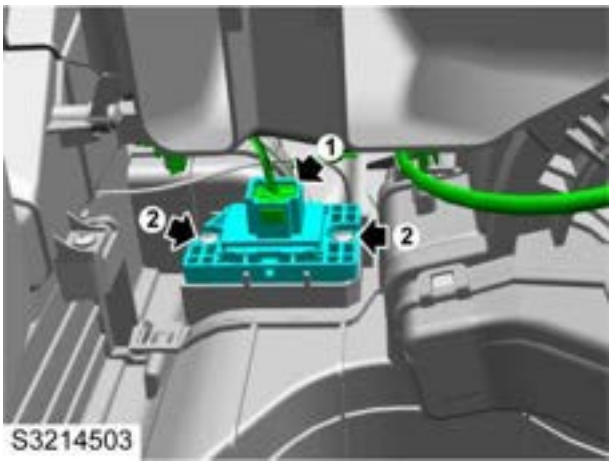

5. Remove the blower speed regulation resistor from the A/C box.

Refit

1. Fix the blower speed regulation resistor to the A/C box, fit and tighten 2 screws.
2. Connect the connector of the blower speed control resistor.
3. Fit the instrument panel lower closure panel.

☞ **Instrument Panel Lower Closure Panel Refit**

4. Connect the negative battery cable.

Blower Assembly

Remove

1. Disconnect the negative battery cable.
2. Remove the instrument panel lower closure panel.

☞ **Instrument Panel Lower Closure Panel Remove**

3. Disconnect the blower connector (1).
4. Remove 1 screw (2) fixing the blower to the A/C box.

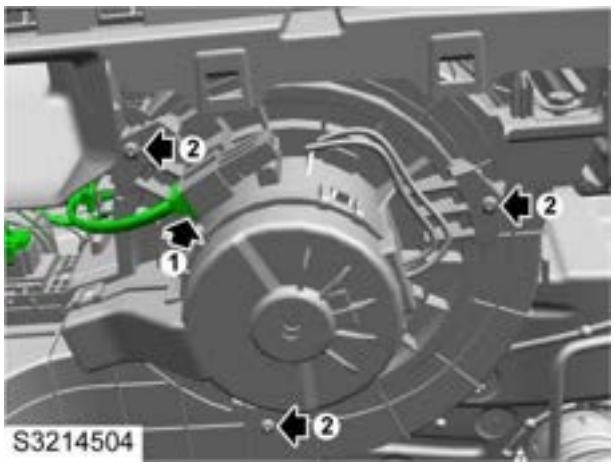

5. Pry off the retaining clip, rotate clockwise and remove the blower from the vehicle.

Refit

1. Rotate the blower anti-clockwise to secure it to the heater and fasten the clips.
2. Fix the blower to the A/C box, fit and tighten 3 screws.
3. Connect the blower connector.
4. Fit the instrument panel lower closure panel.

☞ **Instrument Panel Lower Closure Panel Refit**

5. Connect the negative battery cable.

Internal/External Recirculated Damper Actuator

Remove

1. Disconnect the negative battery cable.
2. Remove the instrument panel lower closure panel.

☞ **Instrument Panel Lower Closure Panel Remove**

3. Disconnect the connector (1) of the internal/external circulation damper actuator.
4. Remove 2 screws (2) fixing the internal/external circulation damper actuator to the A/C box assembly.

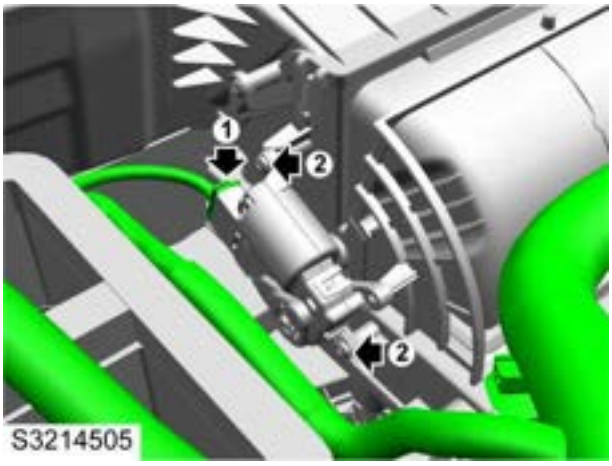

5. Disconnect the motor from the internal/external circulation damper linkage mechanism, and remove the internal/external circulation damper actuator.

Refit

1. Fit the internal/external circulation damper actuator.
2. Connect the internal/external circulation damper actuator to the internal/external circulation damper linkage mechanism.
3. Fix the internal/external circulation damper actuator to the A/C box, fit and tighten 2 screws.
4. Connect the harness connector of the internal/external circulation damper actuator.
5. Fit the instrument panel lower closure panel.

☞ **Instrument Panel Lower Closure Panel Refit**

6. Perform the self-learning for the A/C damper actuator.

☞ **Heating, Ventilation and Air Conditioning Control Module (HVAC)**

Left Temperature Damper Actuator
Remove - Left

1. This part is not available.

Refit - Left

1.

Right Temperature Damper Actuator

Remove - Right

1. Disconnect the negative battery cable.
2. Remove the instrument panel lower closure panel.

☞ Instrument Panel Lower Closure Panel Remove

3. Disconnect the connector (1) of the temperature damper actuator.
4. Remove 2 screws (2) fixing the temperature damper actuator to the A/C box assembly.

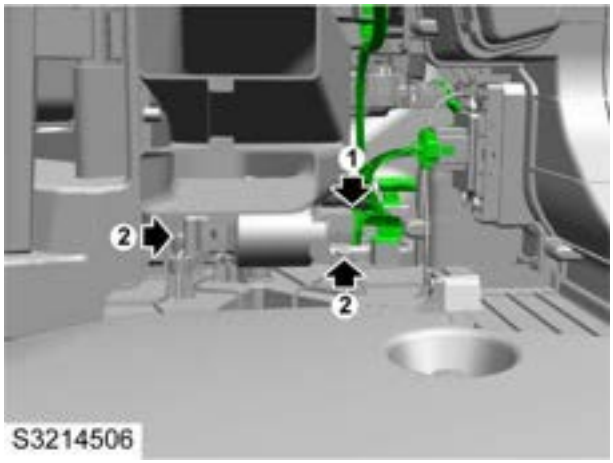

5. Disconnect the motor from the temperature damper linkage mechanism, and remove the temperature damper actuator.

Refit - Right

1. Fit the temperature damper actuator.
2. Connect the motor to the temperature damper linkage mechanism.
3. Fix the temperature damper actuator to the A/C box assembly, fit and tighten 2 screws.
4. Connect the connector of the temperature damper actuator.
5. Fit the instrument panel lower closure panel.

☞ Instrument Panel Lower Closure Panel Refit

6. Connect the negative battery cable.
7. Perform the self-learning for the A/C damper actuator.

☞ Heating, Ventilation and Air Conditioning Control Module (HVAC)

Mode Damper Actuator

Remove

1. Disconnect the negative battery cable.
2. Remove the brake pedal assembly.

☞ **Brake Pedal Assembly Remove**

3. Disconnect the connector (1) of the mode damper actuator.
4. Remove 2 screws (2) fixing the mode damper actuator to the A/C box assembly.

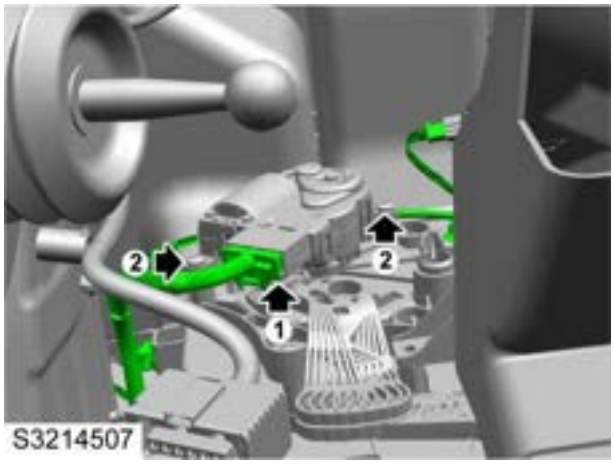

5. Disconnect the motor from the mode damper linkage mechanism, and remove the mode damper actuator.

Refit

1. Fit the mode damper actuator.
2. Connect the motor to the mode damper linkage mechanism.
3. Fix the mode damper actuator to the A/C box assembly, fit and tighten 2 screws.
4. Connect the connector of the mode damper actuator.
5. Fit the brake pedal assembly.

☞ **Brake Pedal Assembly Refit**

6. Connect the negative battery cable.
7. Perform the self-learning for the A/C damper actuator.

☞ **Heating, Ventilation and Air Conditioning Control Module (HVAC)**

Heater Core Assembly

Remove

1. Remove the A/C box assembly.

A/C Box Assembly Remove

2. Remove 1 screw fixing the heater core pipe clamp to the A/C box.

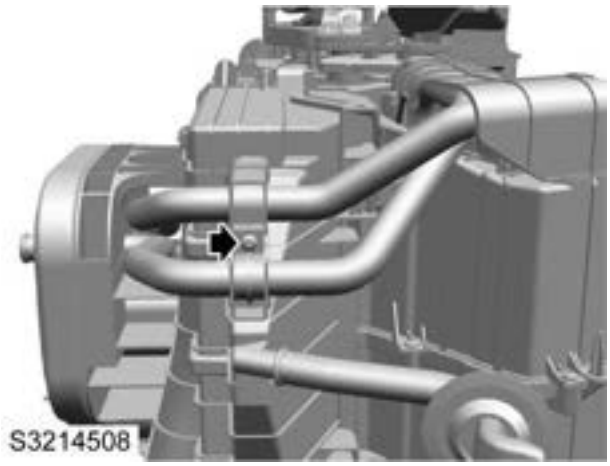

3. Remove 5 screws fixing the heater core cover plate to the A/C box.

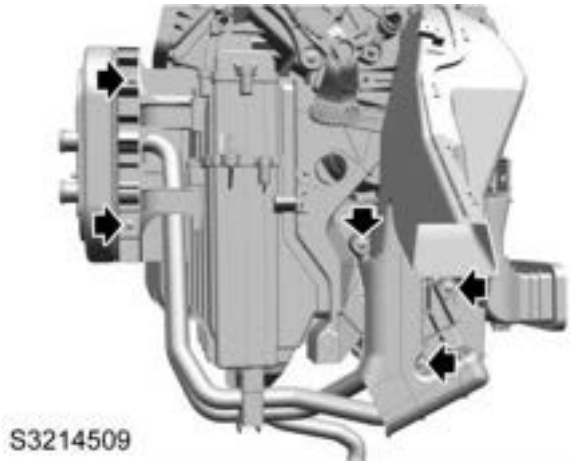

4. Pull out the heater core.

Refit

1. Fit the heater core.
2. Fix the heater core cover plate to the A/C box, fit and tighten 5 screws.
3. Fix the heater core clamp to the A/C box, fit and tighten 1 screw.
4. Fit the A/C box assembly.

A/C Box Assembly Refit

Evaporator Core Assembly

Remove

1. Remove the heater core assembly.

☞Heater Core Assembly Remove

2. Remove the screws and clips fixing the A/C box, and separate the A/C box.
3. Remove the evaporator core assembly.

Refit

1. Fit the evaporator core assembly.
2. Fit the A/C box, secure it with clips, fit and tighten the screws.
3. Fit the heater core assembly.

☞Heater Core Assembly Refit

Evaporator Expansion Valve

Remove

1. Disconnect the negative battery cable.
2. Recover the A/C system refrigerant.

☞Refrigerant Refrigerant Recovery Air Conditioning System Drain A/C System Lubricating Oil Refill and Supplementation Refrigerant Refill

3. Remove 1 bolt (2) fixing the A/C evaporator pipe assembly to the expansion valve, disconnect the pipeline, and discard the seal ring.

Caution：Protect the pollutants from entering the open joints.

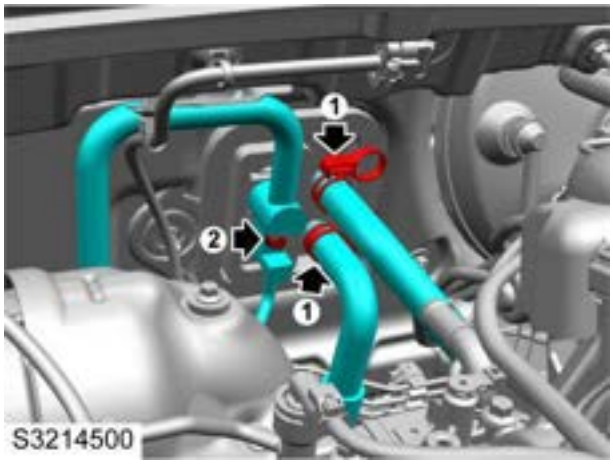

4. Remove 2 screws fixing the expansion valve to the A/C box.

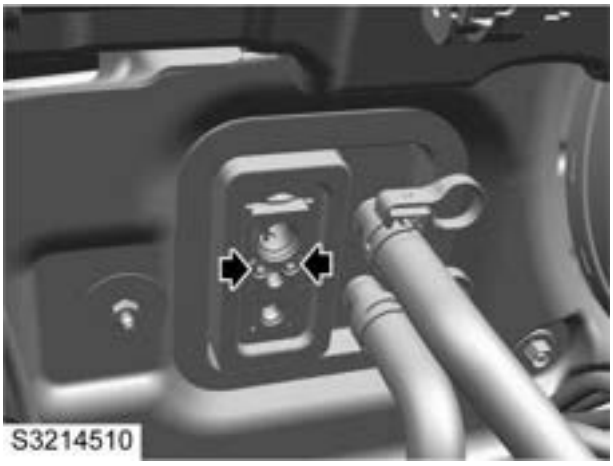

5. Remove the expansion valve assembly from the A/C box and discard the O-ring.

Refit

1. Fix the expansion valve to the A/C box, fit 2 screws and tighten them.
2. Remove the plug, fit a new seal ring to the A/C pipeline, and apply clean compressor oil to it.
3. Fix the A/C evaporator pipeline assembly to the expansion valve, fit 1 bolt, tighten it to **19-25Nm** , and check the torque.
4. Refill the A/C system refrigerant.

☞Refrigerant Refrigerant Recovery Air Conditioning System Drain A/C System Lubricating Oil Refill and Supplementation Refrigerant Refill

5. Connect the negative battery cable.

A/C Box Drain Pipe

Remove

1. Remove the centre console heater closure panel assembly.

☞ **Centre Console Heater Closure Panel Assembly Remove**

2. Remove the drain pipe from the A/C box (1).
3. Remove the drain pipe (2) from the body.

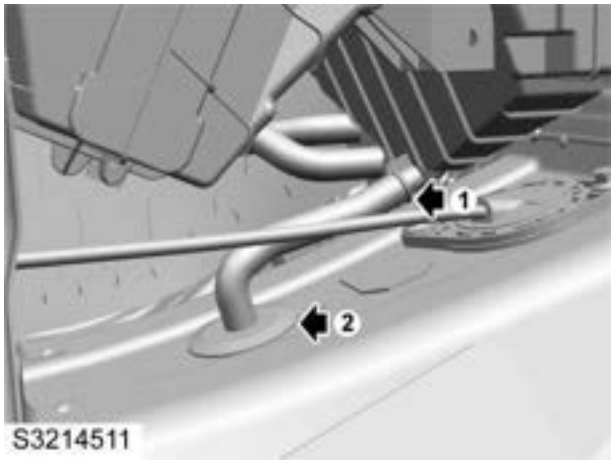

4. Remove the drain pipe.

Refit

1. Fit the drain pipe.
2. Fix the drain pipe to the body.
3. Fit the drain pipe to the A/C box.
4. Fit the centre console heater closure panel assembly.

☞ **Centre Console Heater Closure Panel Assembly Refit**

A/C Box Footwell Air Outlet Temperature Sensor

Remove

1. Disconnect the negative battery cable.
2. Disconnect the connector (1) of the A/C box footwell air outlet temperature sensor.
3. Remove the A/C box footwell air outlet temperature sensor (2).

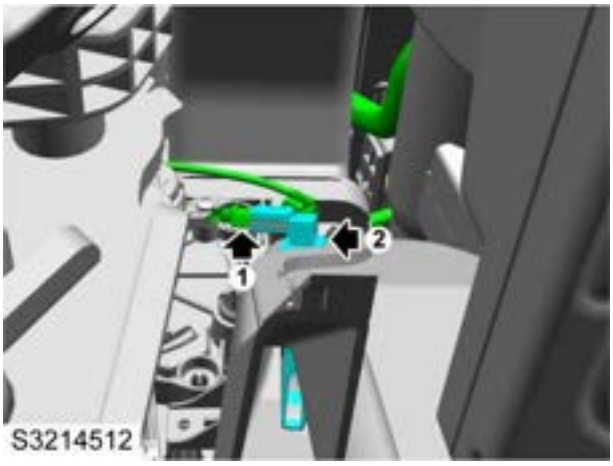

Refit

1. Fit the A/C box footwell air outlet temperature sensor.
2. Connect the connector of the A/C box footwell air outlet temperature sensor.
3. Connect the negative battery cable.

Evaporator Temperature Sensor

Remove

1. Remove the evaporator core assembly.

☞Evaporator Core Assembly Remove

2. Loosen the clip and remove the evaporator core temperature sensor.

Refit

1. Fit the evaporator core temperature sensor and secure it with clips.
2. Fit the evaporator core assembly.

☞Evaporator Core Assembly Refit

Service Guide - Air Duct

Central Face Air Duct
Remove - Middle

1. Remove the instrument panel body.

☞ Instrument Panel Body Remove

2. Loosen the clip and remove the central face air duct.

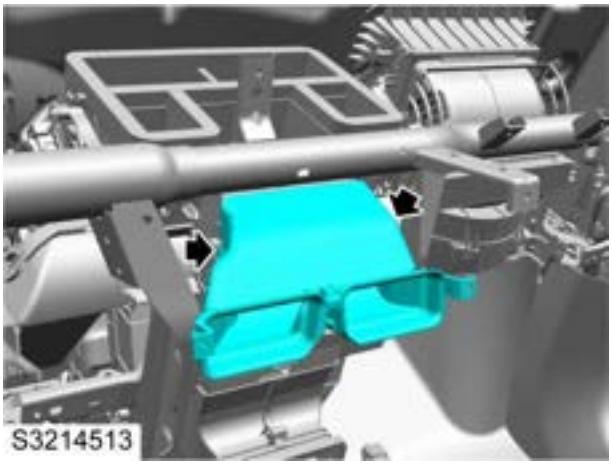

Refit - Middle

1. Fit the central face air duct and secure it with clips.
2. Fit the instrument panel body.

☞ Instrument Panel Body Refit

Left Face Air Duct

Remove - Left

1. Remove the instrument panel body.

Instrument Panel Body Remove

2. Remove 5 screws fixing the left face air duct to the instrument panel body.

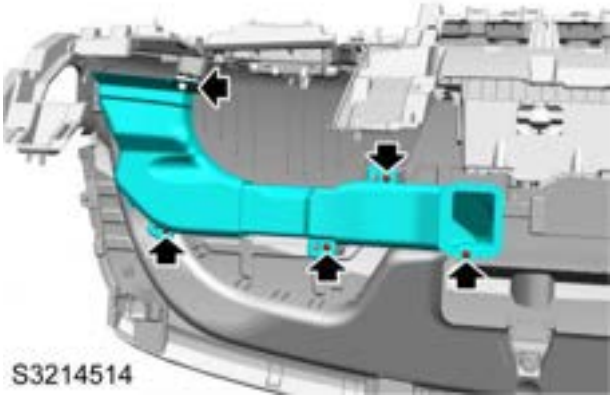

Refit - Left

1. Fix the left face air duct to the instrument panel body, fit and tighten 5 screws.
2. Fit the instrument panel body.

Instrument Panel Body Refit

Left Face Air Outlet Temperature Sensor
Remove - Left

1. Remove the instrument panel body.

Instrument Panel Body Remove

2. Remove the left face air outlet temperature sensor.

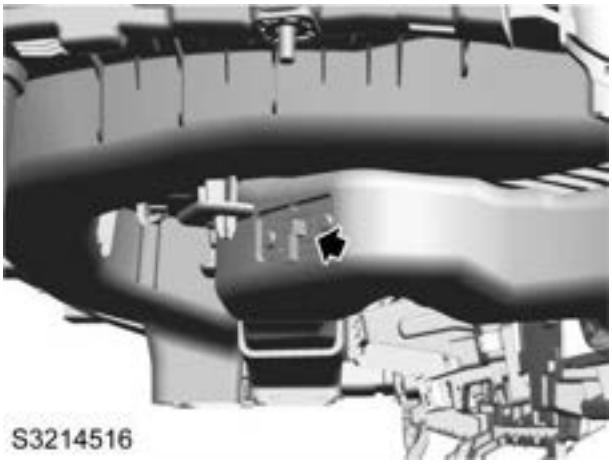

Refit - Left

1. Fit the left face air outlet temperature sensor.
2. Fit the instrument panel body.

Instrument Panel Body Refit

Right Face Air Duct

Remove - Right

1. Remove the instrument panel body.

☞ Instrument Panel Body Remove

2. Remove 4 screws fixing the right face air duct to the instrument panel body.

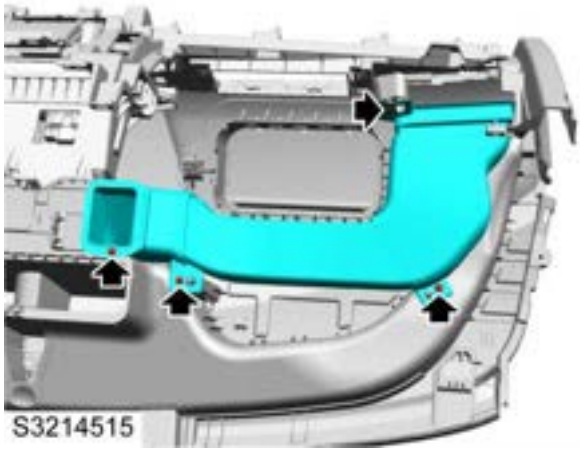

Refit - Right

1. Fix the right face air duct to the instrument panel body, fit and tighten 4 screws.
2. Fit the instrument panel body.

☞ Instrument Panel Body Refit

Right Face Air Outlet Temperature Sensor
Removal - Right
Refit - Right

Centre Console Air Duct

Remove

1. Remove the centre console assembly.

☞ **Centre Console Assembly Remove**

2. Remove the centre console rear panel.

☞ **Centre Console Rear Panel Remove**

3. Remove 5 screws fixing the centre console air duct to the centre console.

S3214517

Refit

1. Fix the centre console air duct to the centre console, fit and tighten 5 screws.
2. Fit the centre console rear panel.

☞ **Centre Console Rear Panel Refit**

3. Fit the centre console assembly.

☞ **Centre Console Assembly Refit**

Removal - Left
Refit - Left

Removal - Right
Refit - Right

Relief Valve

Remove

1. Remove the rear bumper assembly.

☞ **Rear Bumper Assembly Remove**

2. Remove the relief valve.

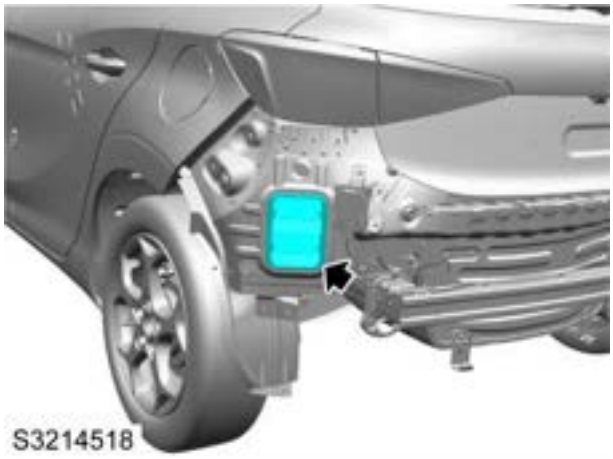

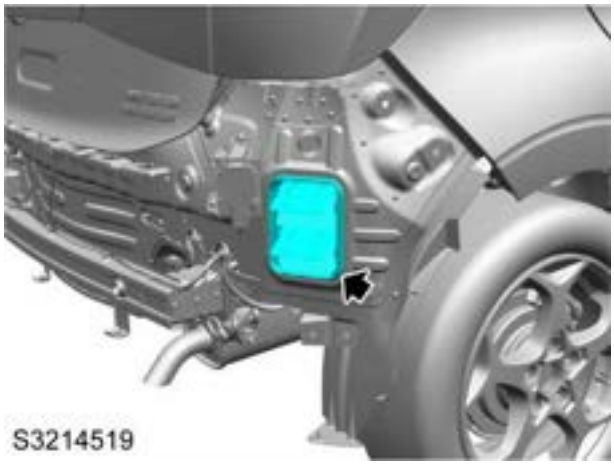

Refit

1. Fit the relief valve.
2. Fit the rear bumper assembly.

☞ **Rear Bumper Assembly Refit**

Service Guide - Control-related

A/C Controller

Remove

1. Remove the passenger side air outlet.

☞ Instrument Panel Side Air Outlet Assembly Remove

2. Remove 4 screws fixing the A/C controller bracket to the instrument panel body, and pull out the A/C controller bracket.

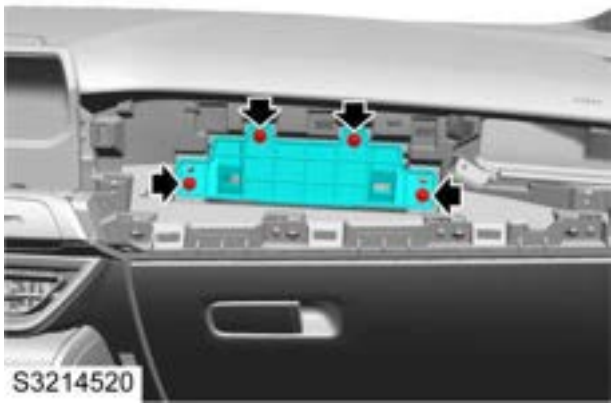

3. Disconnect the connector from the A/C controller.
4. Remove 2 screws fixing the A/C controller to the A/C controller bracket.

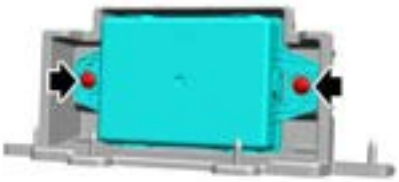

S3214521

Refit

1. Fix the A/C controller to the A/C controller bracket, fit and tighten 2 screws.
2. Connect the connector of the A/C controller.
3. Fix the A/C controller bracket to the instrument panel, fit and tighten 4 screws.
4. Fit the passenger side air outlet.

☞ Instrument Panel Side Air Outlet Assembly Refit

Solar Sensor

Remove

1. Remove the instrument panel body assembly.

☞ Instrument Panel Body Remove

2. Loosen the clip and remove the solar sensor.

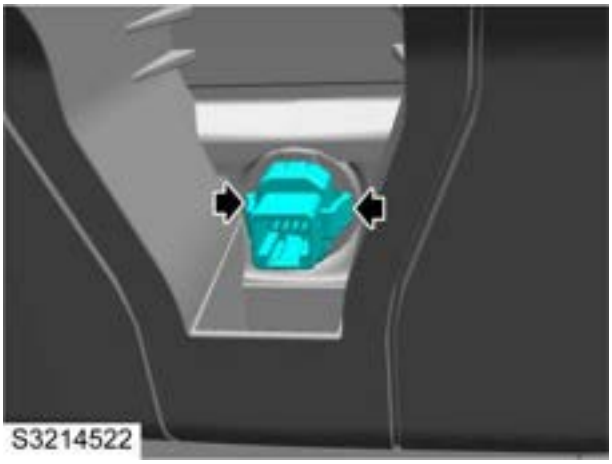

Refit

1. Fit the solar sensor and secure it with clips.
2. Fit the instrument panel body assembly.

☞ Instrument Panel Body Refit

Interior Temperature Sensor

Remove

1. Disconnect the negative battery cable.
2. Remove the glove box assembly.

☞Glove Box Assembly Remove

3. Disconnect the harness connector of the interior temperature sensor.
4. Loosen the clip and remove the interior temperature sensor.

Refit

1. Fit the interior temperature sensor and secure it with clips.
2. Connect the harness connector of the interior temperature sensor.
3. Fit the glove box assembly.

☞Glove Box Assembly Refit

4. Connect the negative battery cable.

Exterior Temperature Sensor

Remove

1. Remove the front bumper assembly.

☞ **Front Bumper Assembly Remove**

2. Remove the ambient temperature sensor.

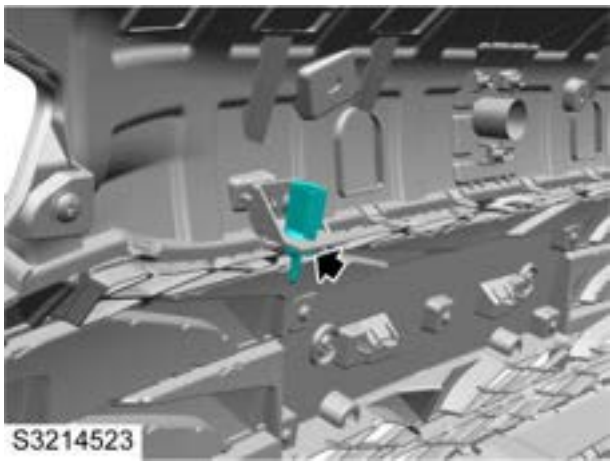

Refit

1. Fit the exterior temperature sensor.
2. Fit the front bumper assembly.

☞ **Front Bumper Assembly Refit**

A/C Control Panel

Remove

1. Remove the centre console assembly.

Centre Console Assembly Remove

2. Remove 4 screws fixing the A/C control panel to the centre console.

Refit

1. Fix the A/C control panel to the centre console, fit 4 screws and tighten them.
2. Fit the centre console assembly.

Centre Console Assembly Refit

Steering System

Specification

Torque

Description	Value
Bolt-Steering gear to subframe	(63-77)Nm+(85-95)°
Bolt-Front subframe to body	(63-77)Nm+ (175-185) °
Bolt-Low Tie Bar Bracket to Low Tie Bar	(81-99) Nm+ (85-95) °
Nut-Front anti-roll bar links to front anti-roll bar	75-90Nm
Bolt-Front lower control arm ball head to steering hub assembly	(18-22) Nm+ (85-95) °
Bolt-Steering column intermediate shaft to Steering gear	(18-22) Nm+ (115-125) °
Nut-Steering machine pull rod to inner pull rod	63-73Nm
Nut-Steering rack to steering knuckle	40-50Nm
Steering gear inner pull rod to steering gear	(28-32) Nm+ (21-27) °
Blot-steering column to facia framework	19-25Nm
Bolt-Steering column intermediate shaft to steering column	(18-22) Nm+ (115-125) °
Bolt Steering Column Lock to Steering Column	13-15Nm
Bolt-Steering wheel to steering column	60-70Nm
Bolt-Damper to steering wheel	6.3-7.3Nm
Screw-Clock spring to Steering column	5-6Nm

Parameters

Type	Column electric power steering system
Steering column type:	Two-way adjustable steering column
Diameter of steering wheel	372.2
Number of turns of steering wheel	2.7

Description and Operation

System Layout

Steering Column Layout

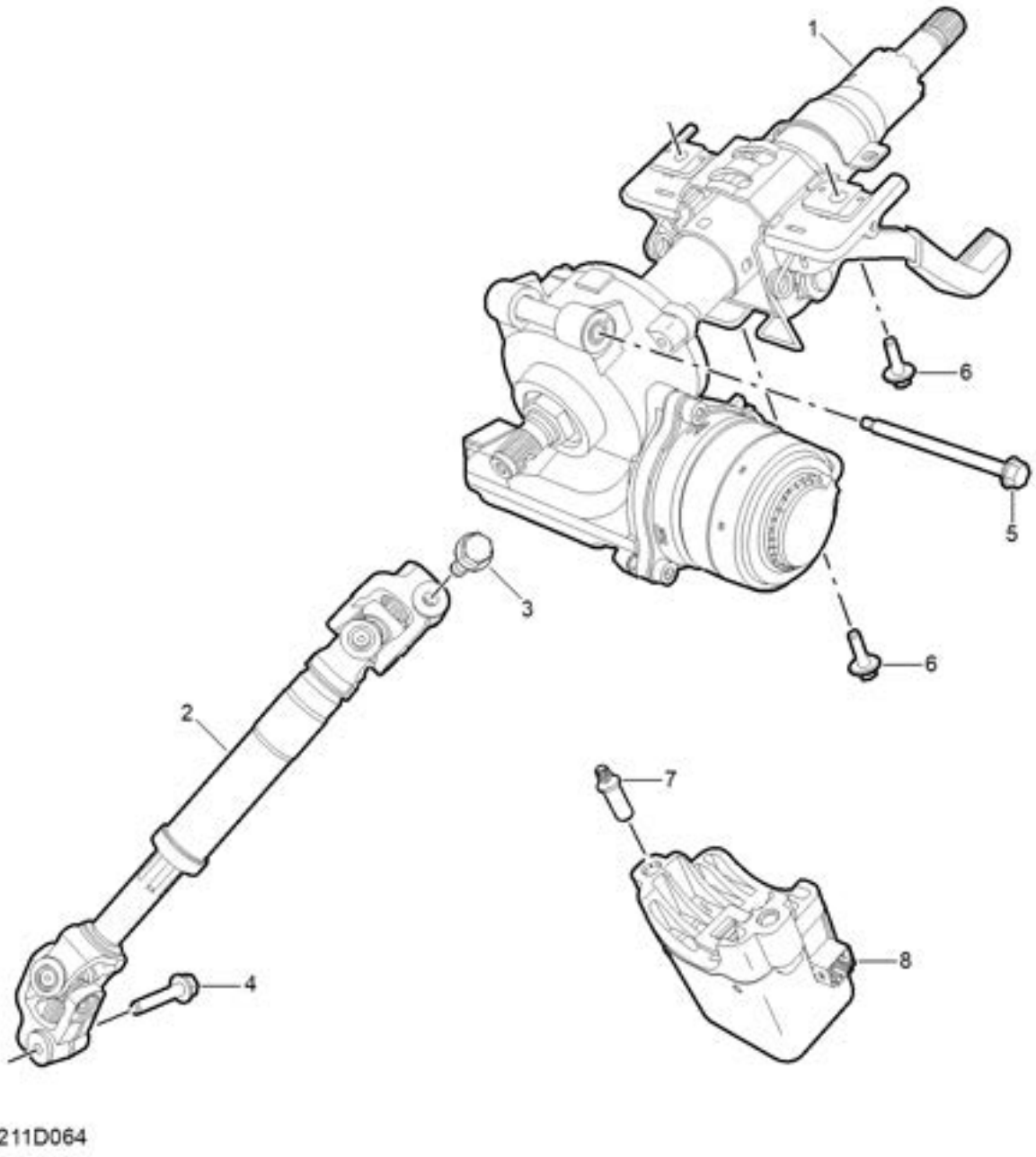

1. Steering Upper Column
2. Steering Intermediate Shaft
3. Tightening Bolt
4. Tightening Bolt
5. Tightening Bolt
6. Tightening Bolt
7. Tightening Bolt (If Equipped)
8. ESCL (If Equipped)

Steering Gear Assembly Layout

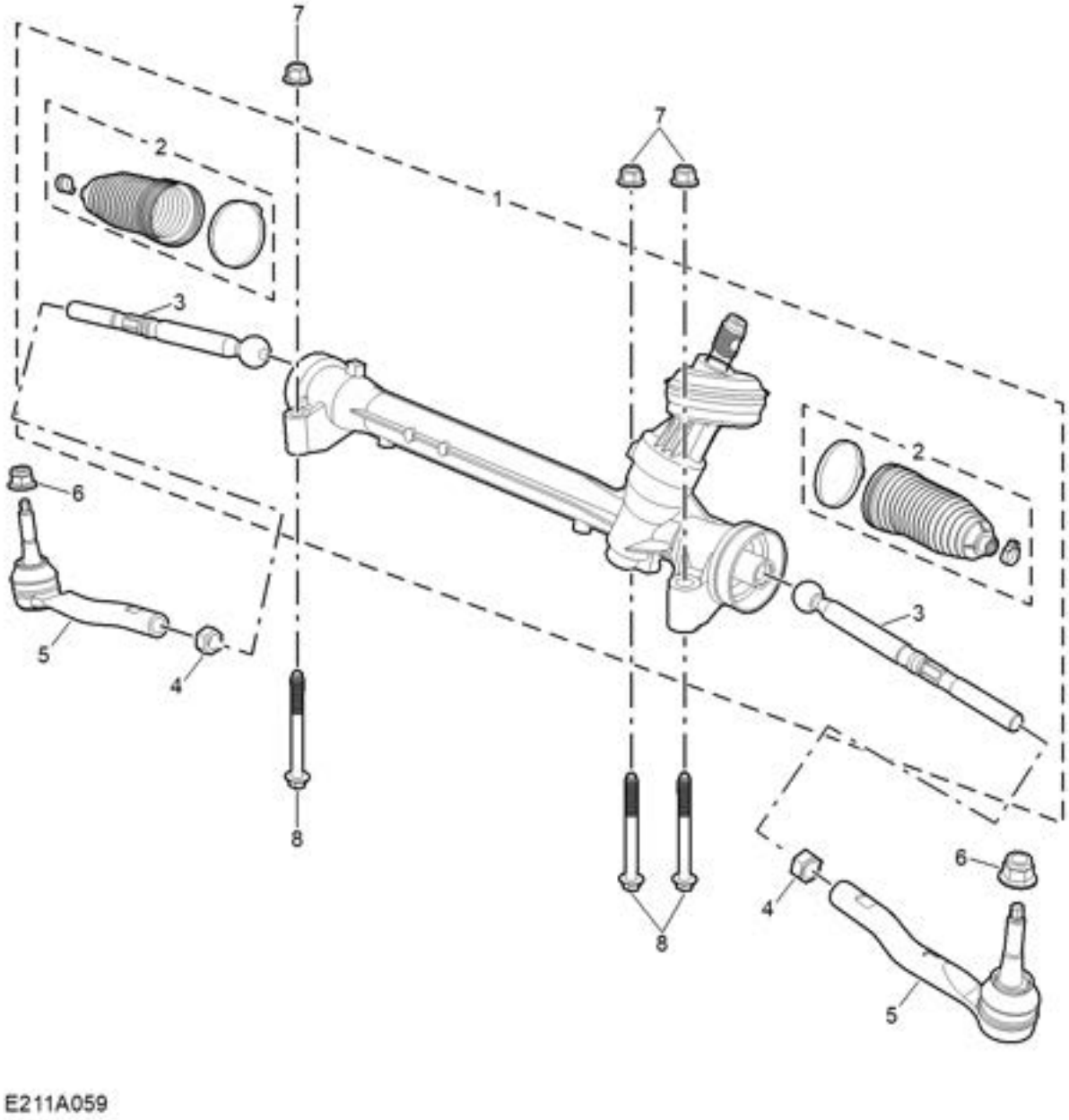

1. Steering Gear Subassembly
2. Steering Gear Boot
3. Steering Gear Inner Tie Rod
4. Locking Nut
5. Steering Gear Outer Tie Rod
6. Nut - Outer Tie Rod Ball Head to Steering Knuckle
7. Steering Gear Retaining Nut
8. Steering Gear Retaining Bolt

System Control Diagram

EPS Control Diagram（SCS low configuration）

S1131145

A=Chassis CAN

EPS Control Diagram（SCS high configuration）

S1131146

A=Chassis CAN

Description

Overview

EPS is a power steering system that directly relies on the motor to provide auxiliary torque. According to different locations of motor arrangement,EPS can be divided into four types: steering column-assist type, pinion-assist type, rack-assist type, double pinion-assist type. The motor of steering column-assist typeEPS is fixed on one side of steering column, and connected to the steering shaft through reducer mechanism, directly driving the steering shaft to assist the steering. The motor and reducer mechanism of the pinion-assist typeEPS are connected with the pinion, which directly drives the pinion to assist the steering. The motor and reducer mechanism of the rack-assist typeEPS directly drive the rack to provide assist. The double pinion-assist typeEPS has two pinions, a driving pinion connected to the steering column and a power-assisted pinion connected to the motor, with the output torque of the motor acting on an additional power-assisted gear through a reducer mechanism and transmitted to the rack.

The basic principle of different types ofEPS is the same: the torque sensor is connected with the steering shaft (pinion shaft). When the steering shaft rotates, the torque sensor starts to work and turns the relative rotational displacement of the input shaft and output shaft under the action of the torsion bar into electric signals to transmit to theECU , which decides the rotation direction of the motor and the size of the power-assisted current according to the signals from the speed sensor and the torque sensor, thus completing the real-time control of power steering. Therefore, it can easily realize the effect of providing different power assist to the motor at different speeds to ensure that the vehicle is light and flexible at low speeds and stable and reliable at high speeds. Therefore, theEPS has a high degree of freedom in setting the steering characteristics.

Electric Power Steering System

The electric power steering system consists of the following components:

1. Electric Power Steering Control Module
2. Steering Motor
3. Torque Sensor
4. Steering Reducer Mechanism

Electric Power Steering Control Module

The function of theECU is to perform logic analysis and calculation based on the torque sensor signals and vehicle speed sensor signals, and then send commands to control the motor operation. Furthermore, theECU is also configured with safety protection and self-diagnosis functions, and theECU determines if the system is in normal state by the motor current, powertrain status, etc. If the system fails, the power will be cancelled automatically and theECU will carry out fault diagnosis and analysis.

Steering Motor

The function of motor is to output an appropriate auxiliary torque based on the ECU instruction, and it is the power source ofEPS . Brushless permanent magnet motors are mostly used.

Torque Sensor

The torque sensor is integrated in the steering gear, and its function is to measure the amount and direction of the torque acted by the driver on the steering wheel. It is the control signal ofEPS .

Reducer Mechanism

The reducer mechanism ofEPS is connected to the motor, which plays the role of speed reduction and torque increase.

Steering Angle Sensor

The Steering Angle Sensor is integrated in the rotary coupler on the steering column combination switch; it can monitor the steering angle data entered by the driver, transmit corresponding data to the related ECU, and give corresponding control to the vehicle.

Operation

When the electric power steering control module is used to control the power steering motor so as to operate the steering gear, the electric power steering system can reduce the power required for the driver to steer the vehicle. The electric power steering control module also uses a combination of torque sensors, steering angle sensors, battery voltage circuits and serial data circuits to perform system functions. The EPS control module will monitor the vehicle speed and powertrain status information through the serial data circuit to determine the magnitude of power for vehicle steering. At a low speed, greater assistance is provided for steering during parking operations. At a high speed, less assistance is provided to improve road feel and directional stability.

The EPS control module determines the magnitude of desired power by using the combination of calculated values of inputs such as torque sensor, steering angle sensor, speed and system temperature. The EPS control module continually monitors the torque from the torque sensor and locates the current signal. With the rotation of the steering column and steering shaft, monitor the steering input shaft and output shaft by torque signal circuit, then use the EPS control module to calculate the turning torque.

The EPS control module responds to the change of torque sensor signal and steering angle sensor signal by controlling the current of the steering motor. The EPS control module controls the PWM motor drive circuit to drive the 3-phase motor.

The EPS control module can calculate the internal system temperature and protect the EPS system from high temperature damage. In order to reduce the high system temperature, the EPS control module will decrease the directive current flowing to the steering motor, that is, reduce the steering assist power. The EPS control module can detect failures of the EPS system. When a fault of the EPS system is detected, the steering warning lamp on the instrument will illuminate.

The EPS control module is provided with the "active return" function, when the driver's hands are off the steering wheel, control of the return speed can improve the driving sense and safety performance greatly.

The EPS control module is also configured with the "end protection" function which can decrease the auxiliary torque and avoid noise, overheat and damage to the mechanical parts before the maximum travel of the steering gear rack is achieved.

Detailed Information List of Component Pins

End View and Pin Information of EPS Control Module Harness Connector FC116

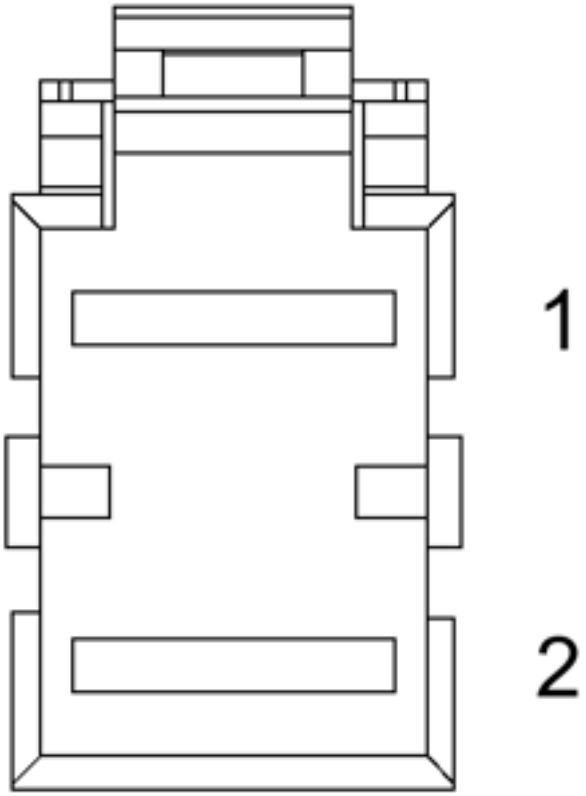

Pin No.	Description
1	KL.30
2	Ground

End View and Pin Information of EPS Control Module Harness Connector FC229

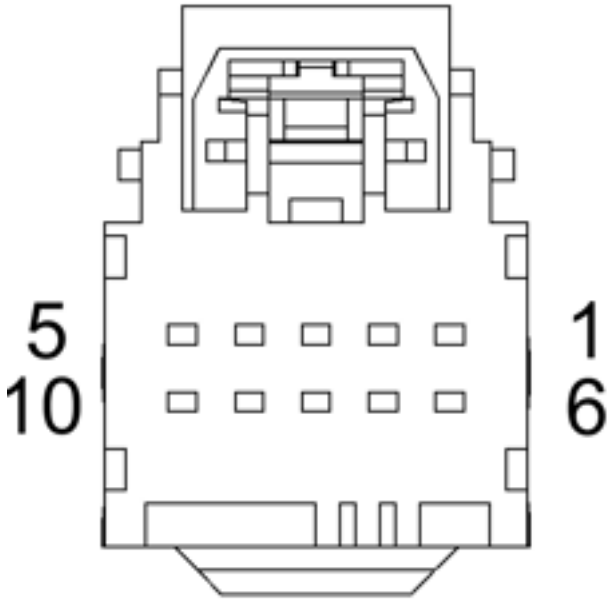

针脚号	描述
1	Wakeup Enable
2	Chassis CAN_H
3	-
4	Chassis CAN_L
5	-
6	-
7	-
8	-
9	-
10	-

Service Guide

Steering Gear Subassembly

Remove

1. Remove and discard 1 bolt fixing the intermediate shaft universal joint to the steering gear input shaft.

2. Remove the front wheels.

☞Wheels Remove

3. Remove the steering gear outer tie rod. (Both sides)

☞Steering Gear Outer Tie Rod Remove

4. Use a tool to lock the control arm ball head to prevent it from rotating, then remove and discard 1 nut (on both sides) fixing the front suspension control arm ball head to the steering knuckle.

Warning：Do not wobble the front lower swing arm up and down with excessive force or substantially, otherwise it will cause damage to the ball joint of front lower swing arm.

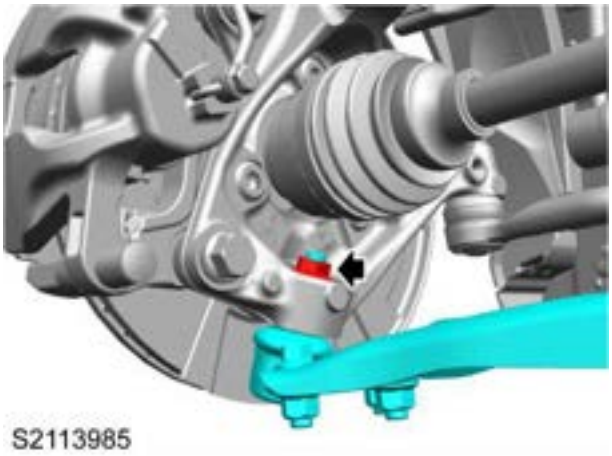

5. Use a tool to lock the ball joint of the front anti-roll bar link to prevent it from rotating, remove and discard 1 nut (on both sides) fixing the link to the front anti-roll bar.

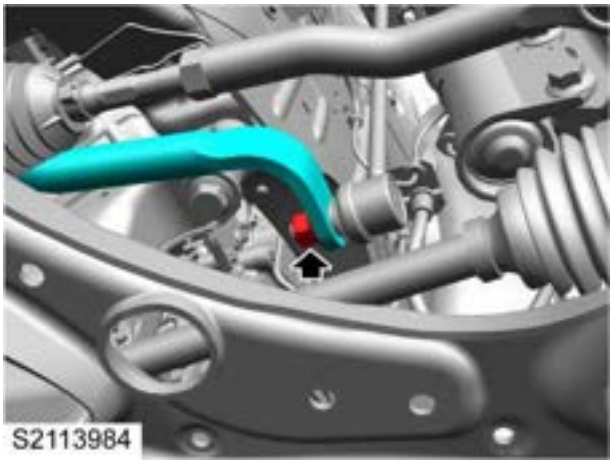

6. Support the powertrain with the hydraulic lifting device.
7. Remove and discard 1 bolt fixing the lower tie rod to the lower tie rod bracket.

8. Use a hydraulic lifting device to support the front subframe, remove and discard 4 bolts fixing the front subframe to the body.

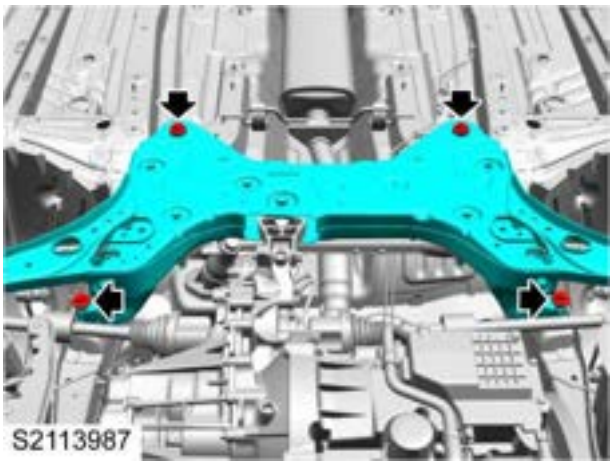

9. Lower the hydraulic lifting device, remove and discard 3 bolts fixing the steering gear subassembly to the subframe.

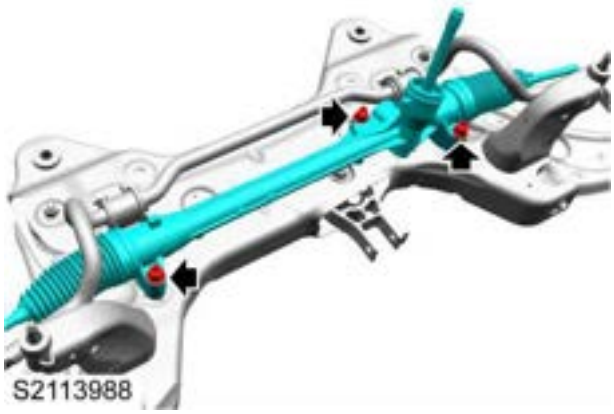

10. Remove the steering gear subassembly.

Refit

1. Locate the power steering gear subassembly to the front subframe, fit 3 new bolts and nuts, and tighten them to **(63-77)Nm+(85-95)°** .
2. Ensure that the junction surface of the front subframe assembly and the body is clean, lift the front subframe assembly and locate it to each fixing point of the body.
3. Fit 4 bolts fixing the front subframe to the body, and tighten them to **(63-77)Nm+ (175-185) °** .
4. Locate the lower tie rod to the lower tie rod bracket, fit 1 new bolt and tighten it to **(81-99) Nm+ (85-95) °** .
5. Move the hydraulic lifting equipment away.
6. Locate the front anti-roll bar link to the front anti-roll bar. Fit 1 new nut (both sides), use a tool to lock the ball joint of the link to prevent its rotation, and tighten the nut to **75-90Nm** .
7. Locate the ball joint of the front suspension control arm to the steering knuckle, fit 1 new nut (both sides) and tighten it to **(18-22) Nm+ (85-95) °** .
8. Fit the steering gear outer tie rod (both sides).

Steering Gear Outer Tie Rod Refit

9. Fit the front wheels.

Wheels Refit

10. Locate the intermediate shaft universal joint to the steering gear input shaft, fit 1 new bolt and tighten it to **(18-22) Nm+ (115-125) °** .
11. Check the four-wheel alignment.

Four-Wheel Alignment Inspection Adjustment

12. Perform a self-learning for the electric power steering module.

Electric Power Steering Module (EPS)

Steering Gear Outer Tie Rod

Remove

1. Remove the front wheels.

☞ Wheels Remove

2. Remove 1 nut (1) fixing the steering gear outer tie rod to the steering knuckle and discard it.
3. Disconnect the steering gear outer tie rod from the steering knuckle.
4. Mark the location of the regulating nut, and loosen the nut (2) fixing the steering gear outer tie rod to the steering gear inner tie rod.

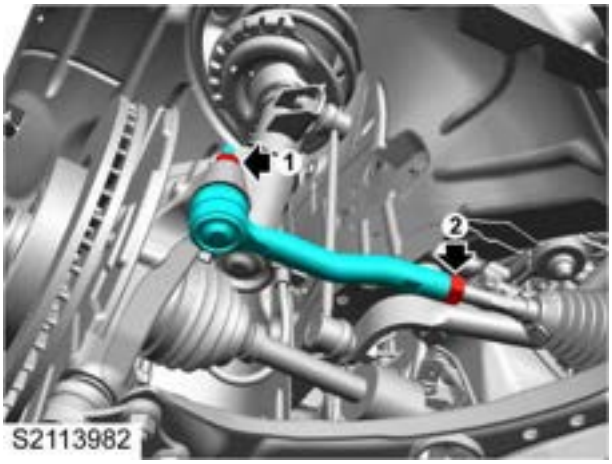

5. Unscrew the regulating nut of the steering gear outer tie rod from the steering gear inner tie rod.

Refit

1. Screw the regulating nut, and tighten the steering gear outer tie rod to the mark position of locking nut with the ball joint upward.
2. Tighten the locking nut to **63-73Nm** .
3. Locate the outer tie rod of steering gear to the steering knuckle, fit 1 new nut and tighten it to **40-50Nm** .
4. Fit the front wheels.

☞ Wheels Refit

5. Check the four-wheel alignment.

☞ Four-wheel Alignment Inspection Adjustment

6. Perform the software flashing for the electric power steering module.

☞ Electric Power Steering Module (EPS)

Steering Gear Inner Tie Rod

Remove

1. Remove the steering gear boot service kit.

☞ Steering Gear Boot Service Kit Remove

2. Unscrew and disconnect the steering gear inner tie rod from the steering gear.

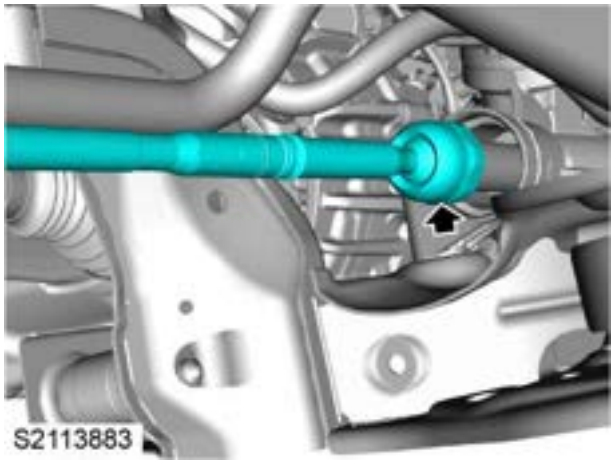

3. Remove the steering gear inner tie rod.

Refit

1. Locate the steering gear inner tie rod to the steering gear and use a tool to tighten the steering gear inner tie rod to **(28-32) Nm+ (21-27) °** .
2. Fit the steering gear boot service kit.

☞ Steering Gear Boot Service Kit Refit

Steering Gear Boot Service Kit

Remove

1. Remove the steering gear outer tie rod.

Steering Gear Outer Tie Rod Remove

2. Remove and discard 2 clamps of the steering gear boot.

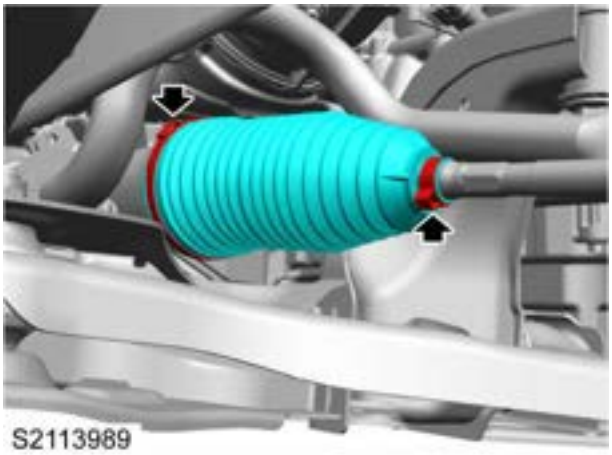

3. Remove the steering gear boot from the steering gear.

Refit

1. Fix the steering gear boot to the steering gear. Ensure that the steering gear boot is located in the steering gear groove.
2. Fit 2 new boot clamps of the steering gear to the steering gear boot, and secure them.
3. Fit the steering gear outer tie rod.

Steering Gear Outer Tie Rod Refit

Upper Steering Column Assembly
Remove

1. Remove the steering wheel combination switch.

☞ **Steering Wheel Combination Switch Remove**

2. Remove the driver side lower trim panel assembly.

☞ **Driver Side Lower Trim Panel Assembly Remove**

3. Remove the steering column shield.

☞ **Steering Column Shield Remove**

4. Models with electronic steering column lock.
   a. Disconnect the harness connector of the electronic steering column lock.

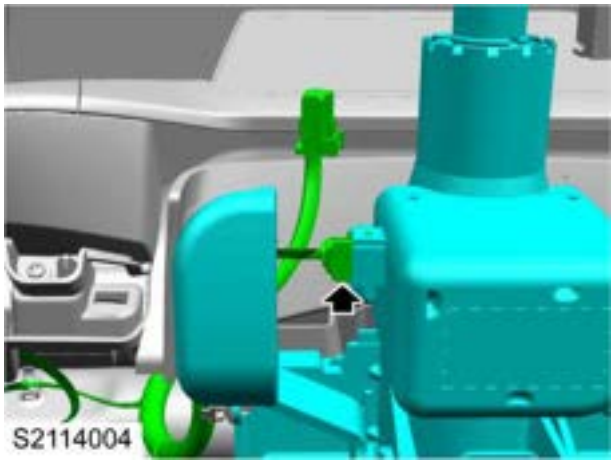

5. Models with manual steering column lock.
   a. Disconnect the harness connector of the Start switch.

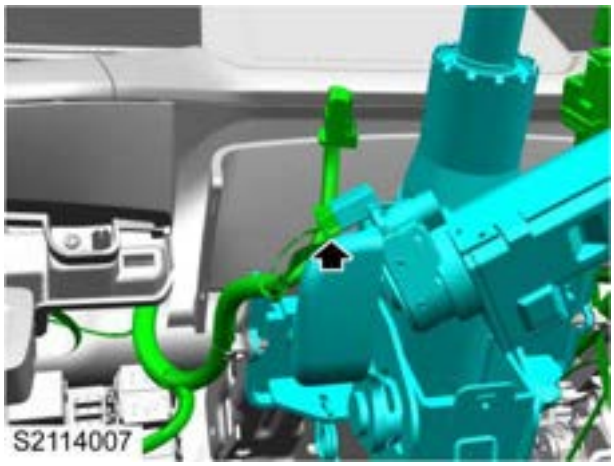

6. Disconnect 2 harness connectors of the steering motor.

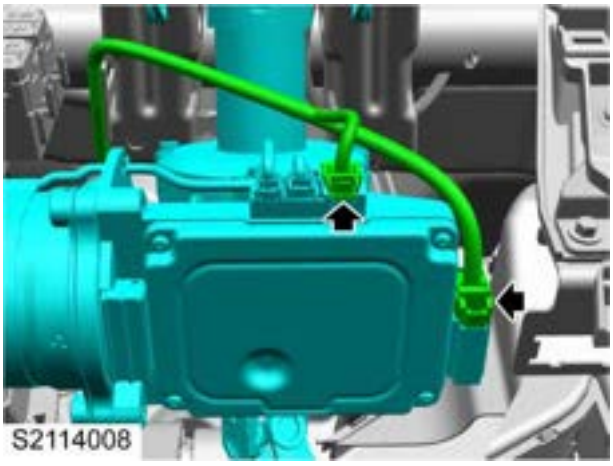

7. Remove 1 bolt fixing the intermediate shaft universal joint to the upper steering column and discard it.

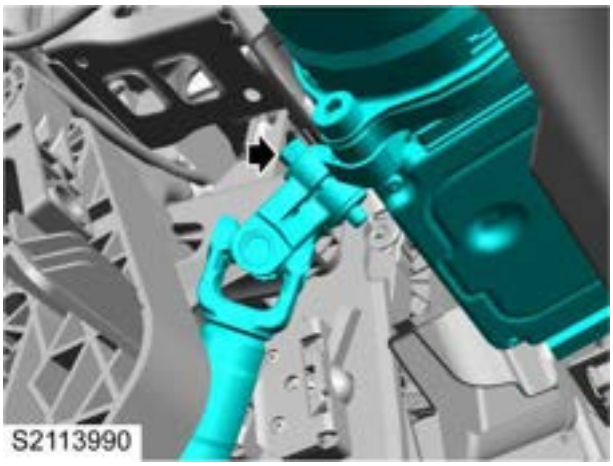

8. Remove 3 bolts fixing the steering column to the instrument panel beam.

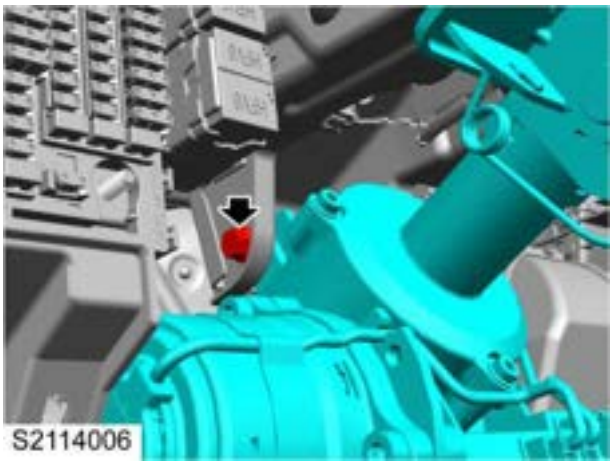

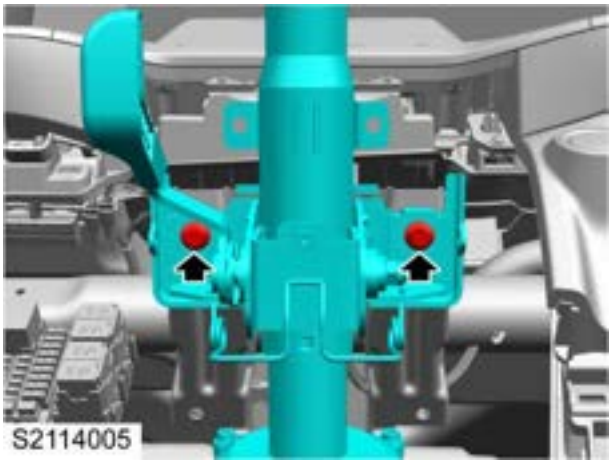

9. Disconnect the relevant harness clips from the upper steering column, and remove the upper steering column assembly.

Refit

1. Locate the steering column to the instrument panel beam, fit the relevant harness clips, fit 3 bolts and tighten them to **19-25Nm** .
2. Locate the intermediate shaft universal joint to the upper steering column, fit 1 new bolt and tighten it to **(18-22) Nm+ (115-125) °** .
3. Connect 2 harnesses to the steering motor.
4. Models with Manual Steering Column Lock.
   a. Connect the harness of the start switch.
5. Models with Electronic Steering Column Lock.
   a. Connect the harness of the electronic steering column lock.
6. Fit the steering column shield.

☞ **Steering Column Shield Refit**

7. Fit the driver side lower trim panel assembly.

☞ **Driver Side Lower Trim Panel Assembly Refit**

8. Fit the steering wheel combination switch.

☞ **Steering Wheel Combination Switch Refit**

9. Perform a self-learning for the electric power steering module.

☞ **Electric Power Steering Module (EPS)**

Steering column lock base

Remove

1. Remove the upper steering column assembly.

Upper Steering Column Assembly Remove

2. Fix the upper steering column assembly to the drilling machine.
3. Drill a small hole in the retaining bolt head of the steering column lock, choose a broken screw extractor with an appropriate diameter to rotate the bolt out, and do not damage adjacent parts.

Refit

1. Locate the steering column lock to the upper steering column, fit 2 new bolts, tighten them to **13-15Nm** , and twist off the bolt heads.

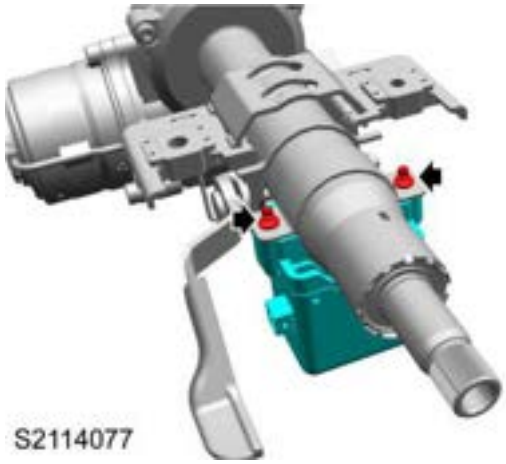

2. Fit the upper steering column assembly.

Upper Steering Column Assembly Refit

3. Perform a self-learning for the electric power steering module.

Electric Power Steering Module (EPS)

Steering Column Shield

Remove

1. Adjust the steering wheel leftward or rightward, and pry off the clip of steering column upper shield.

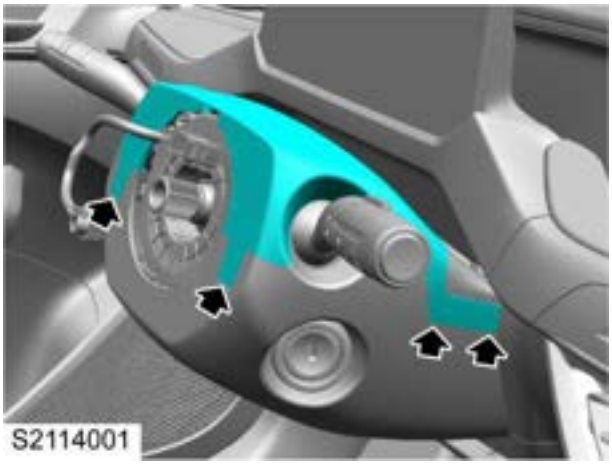

2. Pry off the clip of the steering column upper shield and the IPK frame upholstery, and remove the steering column upper shield assembly.
3. Remove 1 screws fixing the steering column lower shield to the steering column.

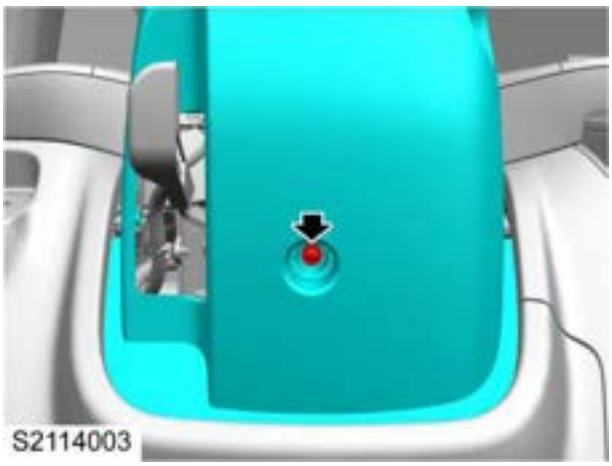

4. Turn the steering wheel to the left and right, and remove 2 screws fixing the steering column lower shield to the combination switch.

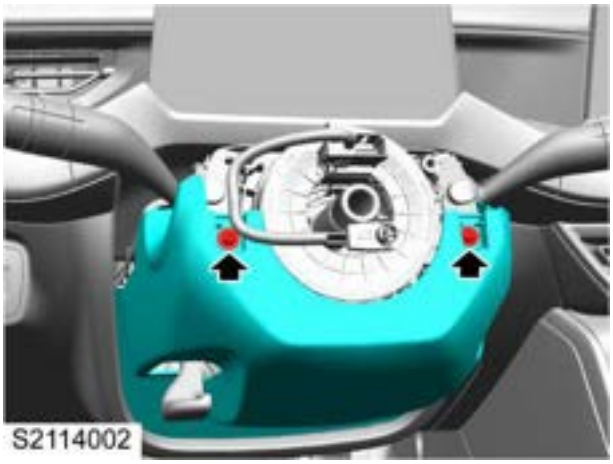

5. Release the steering column to an appropriate position, and remove the steering column lower shield.

Refit

1. Locate the steering column lower shield to the steering column.
2. Turn the steering wheel to the left and right, fit and tighten 2 screws fixing the steering column lower shield to the combination switch.
3. Fit and tighten 1 screw fixing the steering column lower shield to the steering column.
4. Align the clips of instrument pack frame with the holes of steering column upper shield, push them hard to the end, and clamp them in place.
5. Align the adapters of instrument pack frame and upper shield assembly with the adapters of steering column lower shield, push them hard to the end, and clamp them in place.

Steering Intermediate Shaft

Remove

1. Keep the wheels facing forward and lock the steering wheel.
2. Remove and discard 1 bolt fixing the intermediate shaft universal joint to the steering gear input shaft.

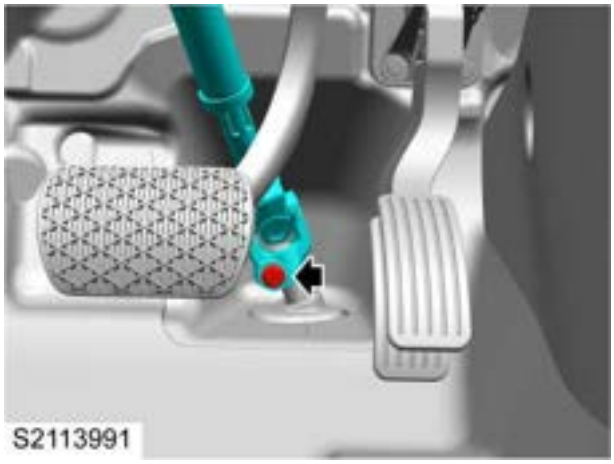

3. Remove 1 bolt fixing the intermediate shaft universal joint to the upper steering column and discard it.

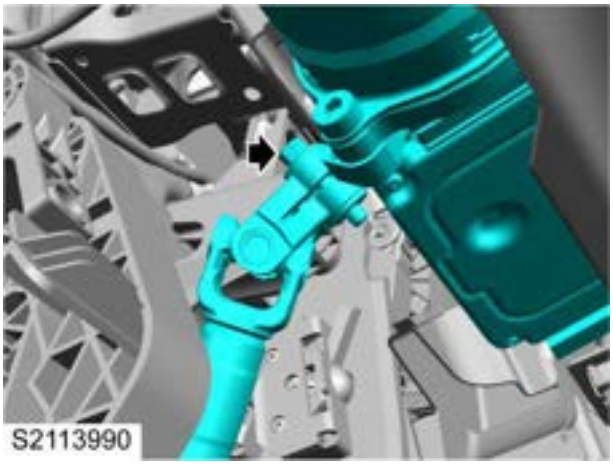

4. Remove the intermediate shaft.

Refit

1. Locate the intermediate shaft universal joint to the upper steering column, fit 1 new bolt and tighten it to **(18-22) Nm+ (115-125) °** .
2. Locate the intermediate shaft universal joint to the steering gear, fit 1 new bolt and tighten it to **(18-22) Nm+ (115-125) °** .

Steering Wheel Assembly

Remove

1. Remove the steering wheel airbag.

☞Steering Wheel Airbag Remove

2. Return the steering wheel so that the wheels are in straight ahead position.
3. Disconnect the harness connector (1) of the steering wheel.
4. Unscrew 1 bolt (2) fixing the steering wheel to the steering column.

5. Ensure that the steering wheel is safely disengaged from the steering column spline grooves and then remove the bolts.
6. Remove the steering wheel assembly.
7. Stick tape along the edge of the steering column lever combination switch to keep it in the correct mounting position.

Refit

1. Remove the tape on the combination switch of the steering column lever.
2. Ensure that the wheel is in the front, and fit the steering wheel to the steering column according to the mark.

3. Locate the steering wheel on the steering column, fit 1 bolt, and tighten it to **60-70Nm** .
4. Connect the harness connector of the steering wheel.
5. Fit the steering wheel airbag.

☞Steering Wheel Airbag Refit

Steering Wheel Moulding

Remove

1. Remove the steering wheel airbag.

☞ Steering Wheel Airbag Remove

2. Disconnect the horn contact.
3. Remove 3 bolts fixing the horn sound mechanism to the steering wheel, and remove the horn sound mechanism.

4. Remove 4 screws fixing the steering wheel moulding assembly to the steering wheel.

5. Gently pry off the clip and remove the steering wheel moulding.

Refit

1. Locate the steering wheel moulding assembly to the steering wheel, press the clips in place, fit 4 screws and tighten them.
2. Fit the relevant parts to the horn sound mechanism as shown below, check that the flanging of the rubber shock pad is fitted flat in place, and the spring is fitted in place in the spring base slot. Fit the horn sound mechanism to the steering wheel, fit 3 bolts and tighten them to **6.3-7.3Nm** .

3. Connect the horn contact and press it tightly.
4. Fit the steering wheel airbag.

☞ Steering Wheel Airbag Refit

5. After fitting, perform the horn sound test, and ensure function and sound feeling are not abnormal.

Steering Wheel Multifunction Switch

Remove

1. Disconnect the negative battery cable.
2. Remove the steering wheel moulding.

☞Steering Wheel Moulding Remove

3. Loosen the clips and remove the steering wheel multifunction switch.

Refit

1. Fix the steering wheel multifunction switch to the steering wheel moulding, and press the clips.
2. Fit the steering wheel moulding.

☞Steering Wheel Moulding Refit

3. Connect the negative battery cable.

Steering Wheel Combination Switch

Remove

1. Disconnect the negative battery cable.
2. Remove the steering column shield.

☞Steering Column Shield Remove

3. Pry off the retaining clip of the stalk switch trim panel and remove the trim panel.
4. Remove 2 screws (1) fixing the light stalk switch to the clock spring, remove the light stalk switch and disconnect the harness connector.
5. Remove 2 screws (2) fixing the wiper stalk switch to the clock spring, remove the wiper stalk switch and disconnect the harness connector.

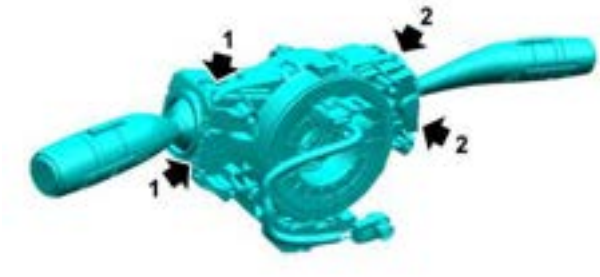

S7213645

6. Remove the steering wheel assembly.

☞Steering Wheel Assembly Remove

7. Fix the clock spring and bracket with tapes, and ensure it will not move left and right and is always in the centre.
8. Remove 1 screw fixing the clock spring to the steering column, disconnect the harness connector and remove the clock spring. Be careful not to damage the locating tape.

Refit

Caution : If the fixing device on a new steering column lever combination switch has been damaged, or if the steering column lever combination switch has been accidentally dropped on the ground, discard the combination switch.

1. Before fitting, ensure the red locating pin of the clock spring is not removed or damaged and the front wheels face the front.
2. Ensure the clock spring to be fitted is in the centre, if it is not, gently rotate the rotor counterclockwise to the end, then turn it clockwise for about 2.7 circles. Align the connector clip with the Lock Pin position (this location is the centre).

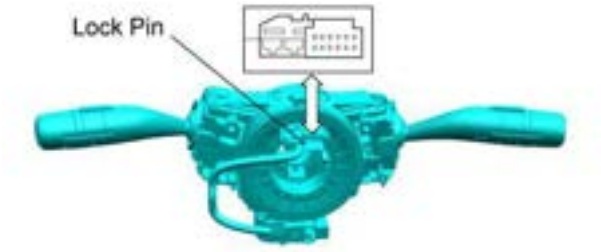

S7213647

3. Connect the harness connector of the clock spring.
4. Fix the clock spring to the steering column, fit 1 screw, tighten it to **5-6Nm** , check the torque, and ensure the combination switch assembly will not loose.

S7213646

5. Fit the steering wheel assembly.

☞Steering Wheel Assembly Refit

6. Connect the harness connector of the stalk switch.
7. Fix the stalk switch to the clock spring, align it with the position and press the clip in place.
8. Connect the negative battery cable.
9. Perform a self-learning for the electric power steering module (EPS).

☞ Electric Power Steering Module (EPS)

10. Check the system, rotate each lever of the combination switch and check if it can work normally.
11. Check if the buttons of the entertainment switch on the steering wheel can work.
12. Fit the steering column shield.

☞Steering Column Shield Refit

Wheel Alignment

Specification

Torque

Description	Value
Nut-Steering machine pull rod to inner pull rod	63-73Nm

Parameters

Item		Parameters
Front Wheel	Camber	-27¢±45¢
	Kingpin Caster	5°52¢±45¢
	Toe-in Angle (Total Toe-in)	6¢±12¢
	Kingpin Inclination	13°21¢±45¢
Rear Wheel	Camber	-1°25¢±45¢
	Toe-in Angle (Total Toe-in)	12¢±15¢

Description and Operation

Description

Wheel Camber Description

Wheel camber refers to the angle at which the wheel deviates from the vertical direction when viewed from the front of the vehicle. When the top of the wheel tilts outward, the wheel camber is positive (+); when the top of the wheel tilts inward, the wheel camber is negative (−). The degree of tilt is measured by the angle deviating from the vertical direction. The set value of wheel camber has influence on direction control and tyre wear.

- Excessive positive wheel camber may cause excessive wear of the outside of tyres and the suspension parts.
- Excessive negative wheel camber may cause excessive wear of the inside of tyres and the suspension parts.
- If the cambers on both sides differ from each other by 1° or above, the vehicle may deviate to the side with larger camber.

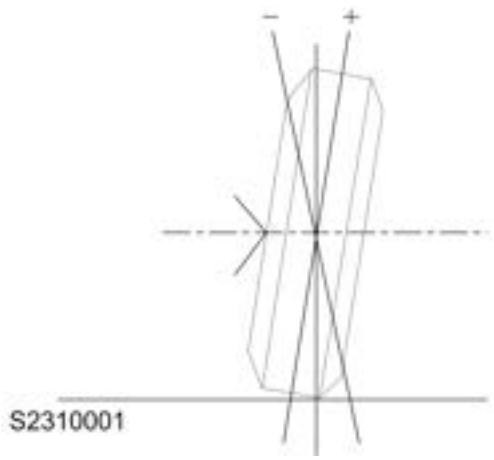

Kingpin Caster Description

Kingpin caster refers to the angle at which the highest point of the steering axis tilts forward or backward when viewed from the side of the vehicle. The caster is positive (+) during backward inclination, and the caster is negative (−) during forward inclination. The kingpin caster affects the direction control during steering instead of the tyre wear. The kingpin caster is affected by the height of the vehicle, so it is of great importance to keep the body at the design height. Overloaded vehicle, weak or slack rear spring will affect the kingpin caster. When the rear part of the vehicle is lower than the designed body leveling height, the front suspension moves towards the direction where the positive kingpin caster increases. When the rear part of the vehicle is higher than the designed body leveling height, the front suspension moves towards the direction where the positive kingpin caster decreases.

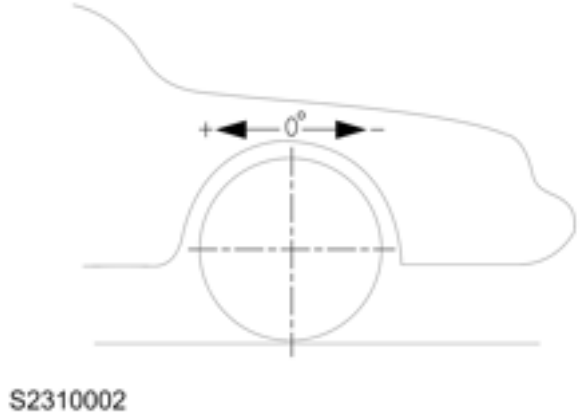

It is difficult to steer at high speed with a small positive kingpin caster, and the wheel return performance decreases after the steering is completed. If the positive kingpin caster of one wheel is larger than that of other wheels, the wheel will deflect toward the centre of the vehicle. In this case, even if the positive kingpin caster is extremely small, it will cause the vehicle to deviate.

Deviation Description

Deviation is a driving phenomenon where the vehicle deviates to one side by itself while driving on a flat road in a straight line, causing the line between the centres of front and rear axles to be inconsistent with the centre line of the driving track.

Deviations are usually caused by the following factors:

- Road slope
- Changes of tyre structure
- Wheel alignment (difference between left and rear kingpin caster of front wheels and difference between camber of left and right wheels)
- Unbalanced steering gear
- Incorrect calibration of steering position and torque sensors of electronic power steering (EPS)

Memory Steering Description

Memory steering refers to the tendency of a vehicle to deviate to the last turning direction operated by the driver. In addition, after turning in the opposite, the vehicle tends to deviate to that direction.

Scrub Radius Description

Theoretically, the scrub radius should be as small as possible. Typically, the steering axis inclination (SAI) intersects the centre line of the tyre and wheels below the road surface to form a positive scrub radius. In the strut structure, the steering axis inclination (SAI) is much larger than the long arm/short arm suspension system, which makes the steering axis inclination (SAI) and the centre line of the tyre and the wheel intersect above the road surface to form a negative scrub radius. The smaller the scrub radius, the better the directional stability. The installation of wheels added after sales leads to additional deviation of the vehicle, which may

significantly increase the scrub radius. The newly fitted wheel may cause further deviation of the tyre centre line from the spindle, which will increase the scrub radius.

A larger scrub radius can cause severe shimmy after hitting the uneven road surface. Four wheel drive vehicles with large tyres use a steering shock absorber to compensate for the increased scrub radius. The scrub radius cannot be measured directly with conventional methods, since it is geometrically designed by the engineer during the design phase of the suspension system.

Thrust Angle Description

The front wheels are used for vehicle orientation or steering, and the rear wheels control the track of the vehicle, which relates to the thrust angle (3). The thrust angle is the track that rear wheels travel. Theoretically, the thrust angle is geometrically consistent with the body centre line (2).

The positive toe-in angle of the rear left wheel as shown in the figure will cause the thrust line (1) to deviate from the centre, and the resulting deviation from the centre line is regarded as the thrust angle.

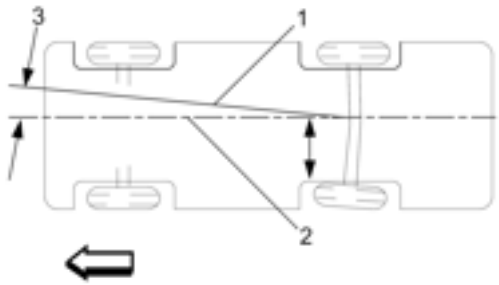

S2310003

If the thrust angle is wrong, the driving track of the vehicle may appear to be that of a dog, and the steering wheel cannot return or the driver may wrongly think the axle curves. The thrust angle can be checked during wheel alignment.

A positive thrust angle indicates that the thrust line points to the right side of the vehicle (RHS).

A negative thrust angle indicates that the thrust line points to the left side of the vehicle (LHS).

If the thrust angle exceeds the specified value, altering the axle-to-body relationship will change the reading of thrust angle.

If the thrust angle is positive, forward movement of the right side and/or backward movement of the left side will cause the thrust angle to move to zero angle.

If the thrust angle is negative, backward movement of the right side and/or forward movement of the left side will cause the thrust angle to move to zero angle.

Toe-in Description

Wheel toe-in refers to the degree that the front and/or rear wheels deflect inward or outward from the front position. When the wheel deflects inward, the toe-in is positive (+); when the wheel deflects outward, the toe-in is negative (−). The actual value of the toe-in is normally a fraction of a degree. The function of the toe-in is to ensure that wheels on both sides roll in parallel. The toe-in also compensates for a small amount of deviation caused by the wheel support system when the wheels roll forward. In other words, if the wheels are set to a positive toe-in when the vehicle is stationary, the wheels on both sides will roll in parallel when the vehicle is moving. Improper adjustment of the toe-in will lead to premature tyre wear and unstable steering.

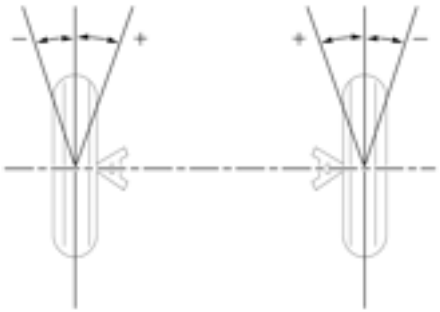

S2310005

Torque Steering Description

Torque steering means that in the event of sudden or hard accelerations, the vehicle will deviate from one direction; during deceleration, the vehicle will deviate from the other direction.

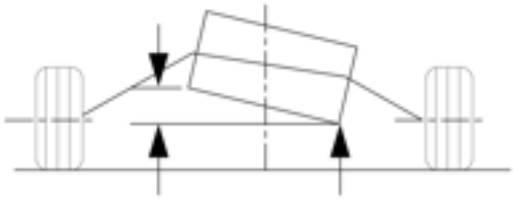

S2310004

On the specific vehicle, the following factors may cause the torque steering to be more obvious:

- A front right tyre with a smaller diameter causes a right guide torque. Check the front tyres for differences in brand, structure or size. If the tyres look similar, exchange the front tyres on both sides and retest the vehicle. Tyres and wheel assemblies have had a significant impact on the correction of torque steering.

- There is great difference between the pressures of front right and front left tyres.
- The difference between the left and right side of the axle angle in the front view may cause the vehicle to deviate significantly when steering. The deviation will appear on the side where the axle tilts downward most from the differential to the wheel. The inclination between the transaxle surface and the horizontal plane can be used as a sign of the tilt angle of the axle. The higher side of the transaxle surface (as shown on the left) has the maximum axle angle which tilts downward.

Side-sway Description

Side-sway refers to the unintentional drift or deviation of a vehicle from a straight direction to either side when applying force by hand on the steering wheel. Side-sway is a symptom resulting from over-sensitive response of the vehicle to external disturbances such as uneven road and crosswind, which may be aggravated by poor returnability of steering mechanism.

Service Guide

Four-wheel Alignment

Inspection

Steering and vibration complaints are not always the result of improper alignment; one possible cause is wheel and tyre imbalance, and another possibility is worn or improperly manufactured tyres. Worn or improperly manufactured tyres cause the tyre off-track, and off-track refers to a driving phenomenon of vehicle's uncontrolled drift to one side during the straight running process on a level road, which causes deviation between the imaginary line connecting the front and rear shaft centres and the centre line of the driving route.

Before performing any adjustment affecting wheel alignment, perform the following inspections and adjustments in order to ensure correct alignment readings:

- Check whether the suspension height of the vehicle is within the specified range.
- Check tyres for proper air inflation or irregular wear.
- Check the radial runout of wheels and tyres.
- Check wheel bearings for excessive clearance or gap.
- Check ball joints and steering gear outer tie rod ball joints for looseness or wear.
- Check control arms and anti-roll bar for looseness or wear.
- Check the steering gear for looseness.
- Check struts/shock absorbers for wear, leakage or any noticeable noises.
- Check the vehicle trim height.
- Check the steering wheel for excessive drag or poor returnability due to stiffness or corrosion of linkage mechanism or suspension components.

Give consideration also to the condition of the equipment used for the alignment; follow the equipment manufacturer's instructions.

Satisfactory vehicle operation may occur over a wide range of alignment setting value. However, if the setting value exceeds the service allowable specifications, correct the alignment to the service recommended specifications.

Perform the following steps when measuring front and rear wheel alignment angles:

1. Fit the alignment equipment according to the manufacturer's instructions.
2. Measure the alignment angles and record the readings.
3. Adjust alignment angles to the specified value, if necessary.

Adjustment

1. Observe the readings on the test equipment and adjust the four-wheel alignment data as required.
2. Alignment of front wheel toe-in:

a. Loosen the locking nut (1) of the steering gear outer tie rod.

b. Adjust the steering gear inner tie rod (2) to set the front wheel alignment parameters to the specified value.

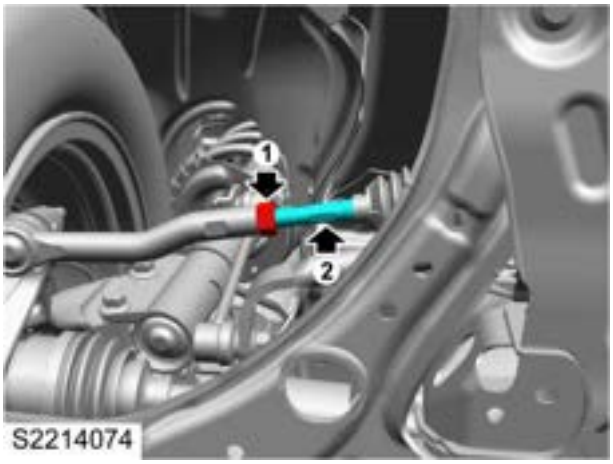

c. Tighten the locking nut to **63-73Nm** .

d. Repeat the above steps for the other side.

Front Suspension

Specification

Torque

Description	Value
Bolt-Front lower control arm ball head to front lower control arm	(81-99) Nm+ (85-95) °
Bolt&Nut-Front lower control arm rear bushing to front subframe	(81-99) Nm+ (85-95) °
Bolt-Front lower control arm ball head to steering hub assembly	(18-22) Nm+ (85-95) °
Nut-Front shock absorber strut top nut	65-75Nm
Bolt-Front shock absorber to body	60-80Nm
Bolt&Nut-Front damper to steering hub assembly	(135-165) Nm+ (85-95) °
Nut-Front anti-roll bar links to front shock absorber strut	75-90Nm
Bolt-Front brake hose bracket to front suspension shock absorber	10-15Nm
Bolt-Tie down to the front sub-frame	(81-99)Nm+(85-95)°
Bolt-Steering gear to subframe	(63-77)Nm+(85-95)°
Bolt&Nut-Front anti-roll bar links to front subframe	55-65Nm
Bolt-Front subframe to body	(63-77)Nm+ (175-185) °
Bolt-Low Tie Bar Bracket to Low Tie Bar	(81-99) Nm+ (85-95) °
Nut-Front suspension stabilizing rod connecting rod to front suspension lower control wall	75-90Nm
Nut-Steering rack to steering knuckle	40-50Nm
Bolt-Steering column intermediate shaft to Steering gear	(18-22) Nm+ (115-125) °
Bolt-Front brake disc to front wheel carrier	(63-77)Nm+(85-95)°
Bolt-Front wheel speed sensor to steering hub assembly	7-10Nm
Nut-Drive shaft locking device	345-375Nm

Parameters

Diameter of Front Horizontal Stabilizer Bar	24mm	
Front Coil Spring Parameters		
Model	CVT	MT
Total Coils	5.3	5.3
Effective Coils	4.1	4.1
Diameter of Spring Wire	12.6mm	12.3mm
Free Height	334.3mm	335.9mm

Description and Operation

System Layout

Suspension layout

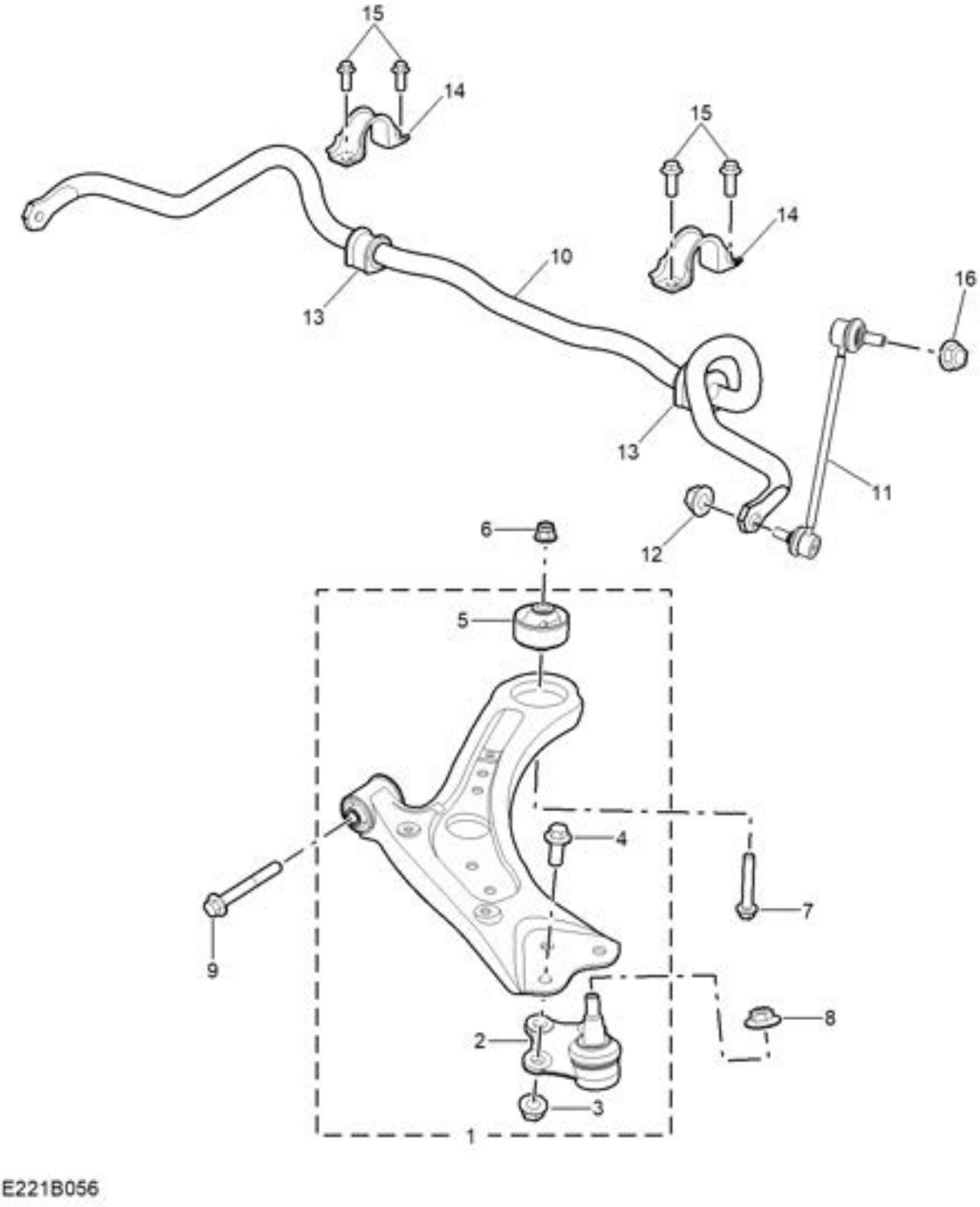

1. Front suspension lower arm assembly
2. Lower swing arm connection ball joint
3. Fastening nut
4. Fastening bolt
5. Lower swing arm bushing
6. Fastening nut
7. Fastening bolt
8. Fastening bolt

9. Fastening bolt
10. Front suspension stabilizer bar
11. Stabilizer bar connecting rod
12. Fastening nut
13. Stabilizer bar bush
14. Stabilizer bar bush fastening clip
15. Fastening bolt
16. Fastening nut

Front shock absorber layout

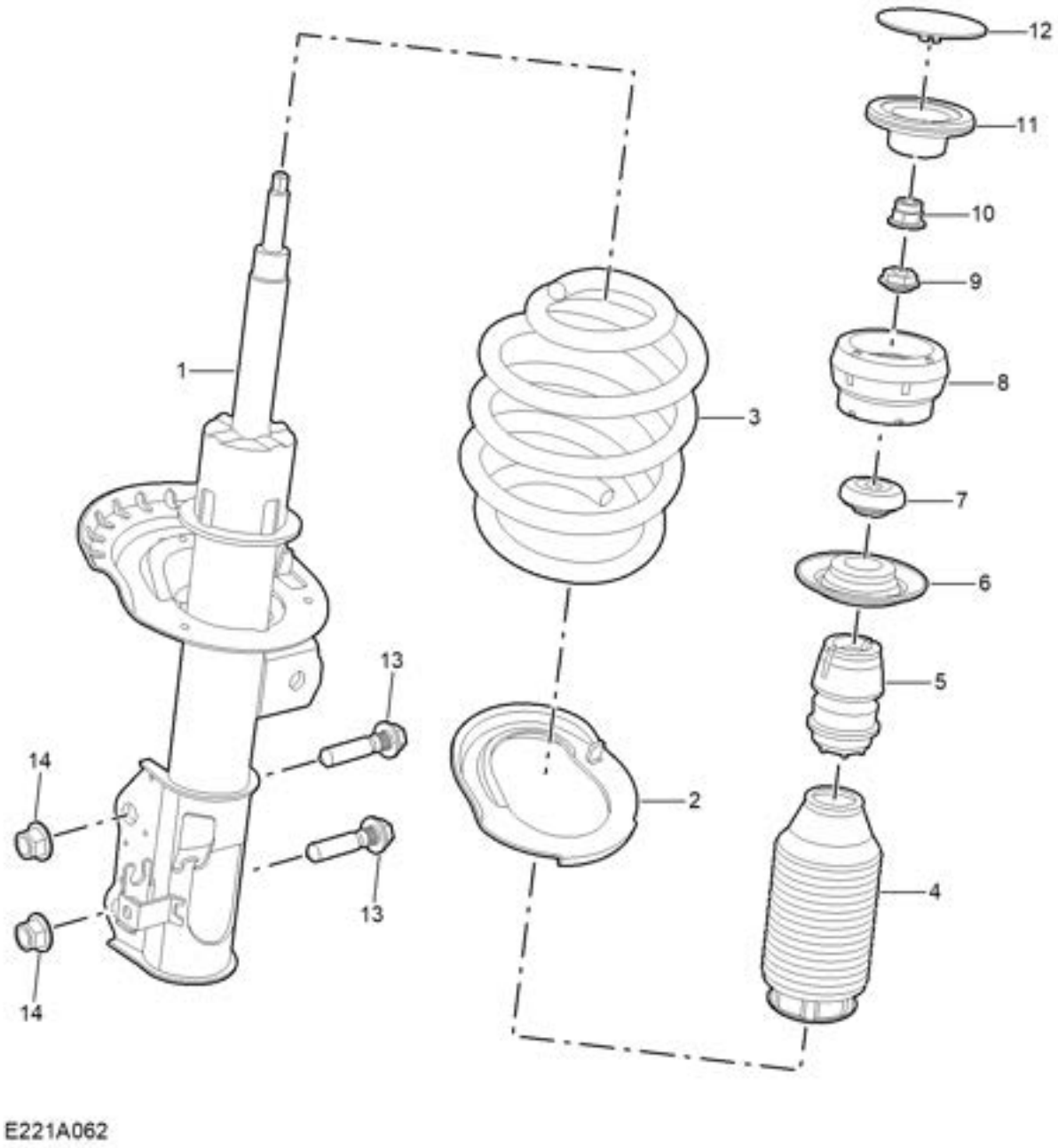

1. Front shock absorber column
2. Front shock absorber lower spring pad
3. Coil spring
4. Dust cover
5. Bumper
6. Top bearing base
7. Top bearing

8. Top bumper
9. Fastening nut
10. Fastening nut
11. Top support seat
12. Dust Cap
13. Fastening bolt
14. Fastening nut

Description

Overview

Front suspension includes:

- Front subframe assembly
- 2 front subframe rear mounting support plates
- 2 front lower swing arm assemblies
- 2 steering knuckle assemblies
- 2 front shock absorber assemblies
- 2 front wheel hub bearing assemblies
- Front anti-roll bar and 2 anti-roll bar links

Front Subframe Assembly

The front subframe is formed by stamping and welding high-strength steel, which features light weight and high structural strength. The geometric dimension of all key positions is accurately controlled during manufacture; this ensures proper location of the front suspension and steering system components. The front subframe is assembled to the body through 4 supporting points. The front subframe provides locations for assembly of all front suspension components except the top support of the shock absorber and the support of the powertrain.

The rear mounting support plate of the front subframe between the rear mounting point of the front subframe and the body can fully increase the rigidity of the front subframe. The arrangement of the supporting points can avoid the displacement of the front subframe under the lateral force; this displacement will produce unnecessary steering effects.

Front Shock Absorber Assembly

2 MacPherson shock absorber assemblies control the damping effect of front suspension. Each shock absorber consists of a damping unit, a coil spring and an upper mounting support assembly. According to the shock absorber transmission ratio (1:1), the design of the front suspension shall feature the anti-dive and anti-squat functions. The layout and design of shock absorber minimise the wheel camber loss as a result of lateral force and improve the handling and steering response capability. The coil spring is between the spring seat and upper mounting support assembly of the shock absorber, which remains in the compressed state. Vibration isolators at both ends of the spring reduce noises delivered to the vehicle body from the front suspension. The dust shield protects the shock absorber strut from getting dirty or damaged. The coil spring shaft is offset from the shock absorber shaft, and this layout can provide lateral load compensation and enhance the damping effect while turning.

Front Shock Absorber

The front shock absorber is of twin-cylinder structure, which can be gas charged and oil filled. This type of structure allows the movement of shock absorber piston inside the inner cylinder. There is an oil drain hole on the inner cylinder between the inner and outer cylinders. This structure minimises the cavitation and eliminates the influence of the piston motion due to the damaged outer cylinder. The lower end of the front shock absorber is connected to the steering knuckle and fixed with bolts and nuts to ensure a correct orientation. The front shock absorber strut is integrated with the upper mounting support by nuts. There is a hexagonal slot at the top of front shock absorber strut, which can prevent rotation of the front shock absorber strut when fastening the nuts of the front shock absorber strut. The spring seat at a certain angle is combined with the shock absorber strut, and the mounting brackets for front anti-roll bar link are welded near the spring seat. There are 2 welding brackets near the bottom of the shock absorber strut, which are used for fitting the front brake hose and wheel speed sensor harness respectively.

Coil Spring

The coil spring is made of spring steel (containing carbon, silicon, manganese, phosphorus, chromium, and other alloy materials), which is assembled with the shock absorber strut. The top of the coil spring is fitted with an upper vibration isolator under the bearing seat, and the bearing is in the upper mounting support. The lower end of the coil spring is fitted on the spring seat through the lower vibration isolator, and the spring seat and the shock absorber strut are integrated. The front coil spring may vary depending on the powertrain used in the vehicle and vehicle configuration. Front coil springs of different configurations can be identified by the color code applied to the coil.

Front Lower Swing Arm Assembly

The front lower swing arm is of fork type. The swing arm body is formed by stamping and welding alloy steel, which connects the front steering knuckle and the front subframe. The front lower swing arm has a ball head, which is tapered to fit the steering knuckle hole, and is fixed on the steering knuckle with a lock nut. The front lower swing arm and subframe are connected by the front/rear bushing. The front bushing is assembled to the front subframe with a bolt. The rear bushing is assembled to the subframe with a pair of bolts/nuts. The force from the vehicle wheel is transferred to the swing arm body by the ball head before the front/rear bushings transfer it to the subframe. In addition to transferring force, the bushings are flexible, allowing the swing arm to sway up and down, and they can also absorb the vibration from the ground and provide a good handling stability with proper rigidity. The swing arm swings according to the axis of the front bushing, which plays a guiding role in the movement track of the wheel and makes the wheel move according to the predetermined track. The ball head of swing arm and the rear bushing can be replaced separately.

Front Anti-roll Bar and Link

The front anti-roll bar made of solid spring steel is connected to the rear of the front subframe by two bushings and bushing clamps. The bushings are assembled with the anti-roll bar as a whole through the secondary vulcanization process, and the bushing clamps are fitted through special tooling, neither of which can be disassembled or replaced individually. The bushings have a low friction, and do not need extra lubrication, which allows the front anti-roll bar to rotate freely in static state and give rapid response to the overturn input. The two ends of the front anti-roll bar are attached to one ball head of front anti-roll bar link, while the other ball head of the link is connected to the front shock absorber strut. This arrangement allows the front anti-roll bar to act in the ratio of 1:1 with wheel travel and provides the maximum lateral stability performance. For each front anti-roll bar, the end of the link is fitted with a ball joint which can increase the response speed and efficiency. The upper ball joint is mounted to the link at 90° to the axis, connected directly to the welded support on the front shock absorber strut, and secured with a lock nut. The lower ball joint and the axis line of the link are at an angle of 90°, which is fitted on the link and connected with the front anti-roll bar by lock nuts. The ball joint on the front anti-roll bar link is not repairable; if any one of the ball joints should be replaced, the front anti-roll bar link assembly shall be renewed.

Service Guide

Front Lower Arm Assembly

Remove

1. Remove the front wheels.

☞Wheels Remove

2. Remove the front bottom deflector.

☞Bottom Deflector Remove

3. Support the front lower swing arm assembly with the hydraulic lifting device.
4. Remove the front lower swing arm outer ball joint.

☞Front Lower Swing Arm Outer Ball Joint Remove

5. Remove and discard 1 bolt (1) fixing the front lower swing arm to the front subframe.
6. Remove 1 bolt and nut (2) fixing the rear bushing of front lower swing arm to the front subframe and discard them.

Warning：Do not wobble the front lower swing arm up and down with excessive force or substantially, otherwise it will cause damage to the ball joint of front lower swing arm.

7. Remove the front lower swing arm assembly.

Refit

1. Locate the front lower swing arm to the subframe, fit 1 new front bushing retaining bolt, fit 1 new rear bushing retaining bolt and nut, and do not tighten them temporarily.
2. Tighten 1 bolt and nut fixing the rear bushing of front lower swing arm to the subframe to **（81-99）Nm+（85-95）°**.
3. Tighten 1 bolt fixing the front bushing of front lower swing arm to the subframe to **（81-99）Nm+（85-95）°**.
4. Fit the front lower swing arm outer ball joint.

☞Front Lower Swing Arm Outer Ball Joint Refit

5. Lower the hydraulic lifter, and push it to the safety zone.
6. Fit the front bottom deflector.

☞Bottom Deflector Refit

7. Fit the front wheels.

☞Wheels Refit

8. Check the four-wheel alignment.

☞Four-wheel Alignment Inspection Adjustment

Front Lower Swing Arm Outer Ball Joint

Remove

1. Remove the front wheels.

Wheels Remove

2. Remove 1 nut (1) fixing the outer ball joint of front lower swing arm to the steering knuckle and discard it.
3. Remove 3 bolts and nuts (2) fixing the outer ball joint of front lower swing arm to the front lower swing arm assembly and discard them.

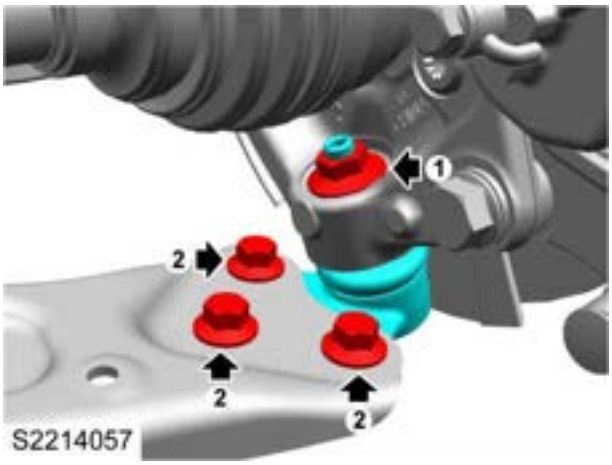

4. Remove the outer ball joint of front lower swing arm with the special tool TCH00125 .

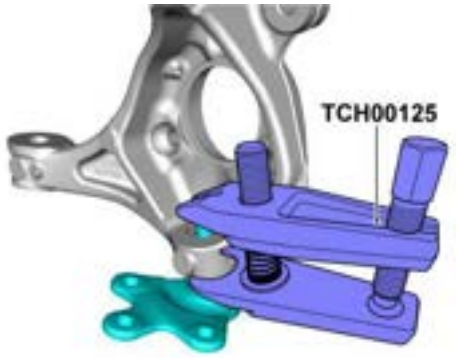

S2213544

Refit

1. Ensure that the outer ball joint of front lower swing arm and the front lower swing arm are clean.
2. Locate the outer ball joint of front lower swing arm to the front lower swing arm, fit 3 new bolts and nuts, and tighten them to **(81-99) Nm+ (85-95) °** .
3. Locate the outer ball joint of front lower swing arm to the steering knuckle, fit 1 new nut and tighten it to **(18-22) Nm+ (85-95) °** .
4. Fit the front wheels.

Wheels Refit

Front Lower Swing Arm Rear Bushing

Remove

1. Remove the front lower swing arm assembly.

Front Lower Swing Arm Assembly Remove

2. Press the rear bushing of front lower swing arm out of the front lower swing arm assembly with a press and special tool TCH00124 .

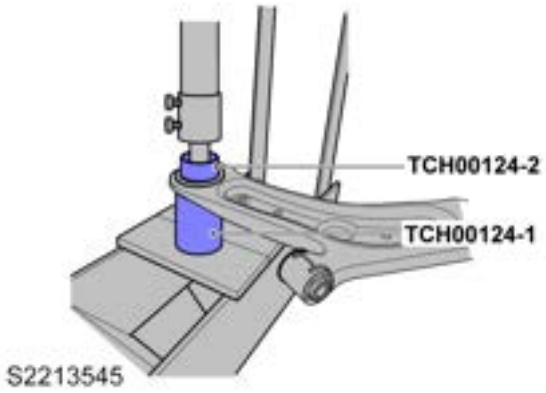

3. Remove the rear bushing of front lower swing arm.

Refit

1. Clean the junction of the front lower swing arm and rear bushing of the front lower swing arm.
2. As shown in the illustration, use a press and the special tools TCH00126 and TCH00124 to press the new rear bushing of front lower swing arm into the lower swing arm.

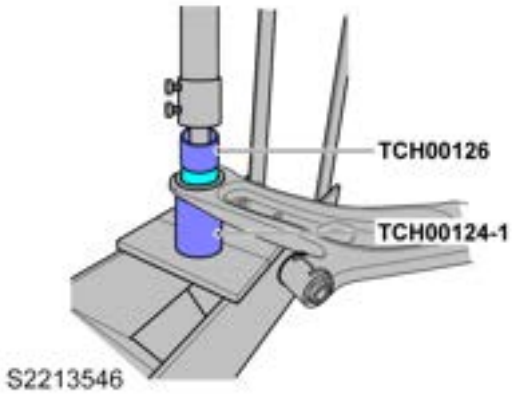

3. Remove the special tool.
4. Fit the front lower swing arm assembly.

Front Lower Swing Arm Assembly Refit

Front Shock Absorber Assembly
Remove

1. Remove the front wheels.

Wheels Remove

2. Remove 1 bolt (1) fixing the front brake hose bracket to the front shock absorber, and disconnect them.
3. Disconnect the harness clip (2) of the wheel speed sensor from the front shock absorber.

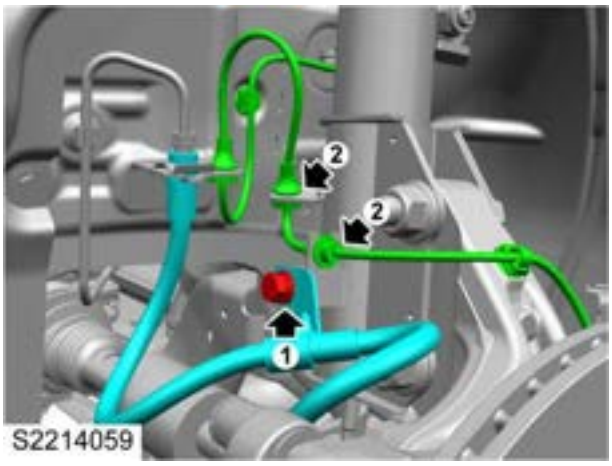

4. Use a tool to prevent the front anti-roll bar link ball joint from rotating, remove and discard 1 nut (1) fixing the link to the front shock absorber, and disconnect the link from the shock absorber.
5. Remove 2 bolts and nuts (2) fixing the front shock absorber assembly to the steering knuckle and discard them.

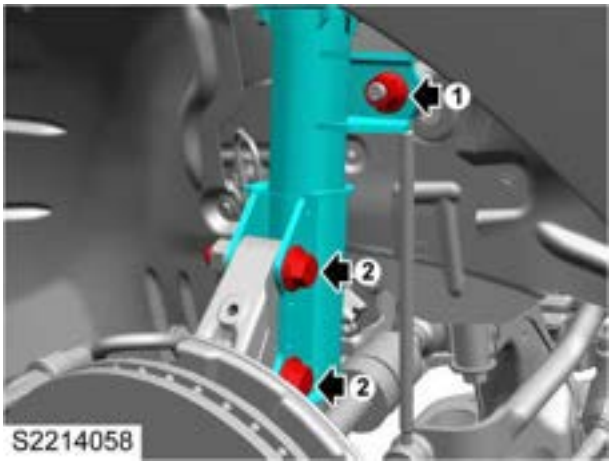

6. Remove the A/C air inlet grille panel and accessories.

A/C Air Inlet Grille Panel and Accessories Remove

7. Remove the anti-rust cap at the top of the shock absorber, and remove the bolts fixing the front shock absorber to the body and discard them.

8. Remove the rebound washer at the top of the shock absorber.

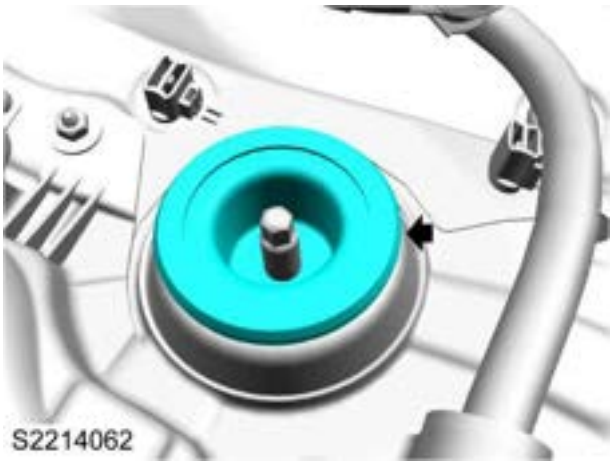

9. Remove the front shock absorber assembly.
10. Position the spring compressor T32016 and T32017 on the front shock absorber spring, ensure that the pins of the spring compressor are in proper place and compress the spring.

S2214061

11. Remove the top bolt.
12. Remove the upper mounting support of the front shock absorber.
13. Remove the bearing and upper spring vibration isolator.
14. Remove the coil spring of front shock absorber.
15. Remove the front shock absorber dust shield and the

bumper block.

16. Remove the front shock absorber insulation pad.
17. Release the pressure of coil spring, loosen the pins from the spring compressor and remove the coil spring.

Refit

1. Check the front shock absorber strut and bearing for any sign of crack or damage.
2. Check the dust shield and bumper block for any sign of aging or damage.
3. Clean the front shock absorber strut and bumper block, and locate the shock absorber insulation pad, bumper block and dust shield to the front shock absorber strut.
4. Locate the spring lower vibration isolator and the spring on the front shock absorber, and use the T32016 and T32017 to compress the spring.
5. Ensure the correct position for refit, locate the upper spring vibration isolator, the bearing and the top mount assembly to the front shock absorber strut.
6. Fit a new nut at the top of the front shock absorber, and tighten it to **65-75Nm** .
7. Release the spring, loosen the adapter of the spring compressor and take out the spring compressor.
8. Clean the junction of the front shock absorber, the rebound washer and the body.
9. Locate the front shock absorber and top rebound washer to the body, fit 1 new bolt and tighten it to **60-80Nm** .
10. Fit the A/C air inlet grille panel and accessories.

☞**A/C Air Inlet Grille Panel and Accessories Refit**

11. Locate the front shock absorber assembly to the steering knuckle, fit 2 new bolts and nuts, and tighten them to **(135-165) Nm+ (85-95) °** .
12. Locate the front anti-roll bar link to the front shock absorber. Fit 1 new nut, use a tool to lock the ball joint of the link to prevent its rotation, and tighten the nut to **75-90Nm** .
13. Locate the front brake hose bracket to the front shock absorber, fit 1 bolt and tighten it to **10-15Nm** .
14. Fix the harness clip of the front wheel speed sensor to the front shock absorber strut bracket, and clamp it.
15. Fit the front wheels.

☞**Wheels Refit**

16. Check the four-wheel alignment.

☞**Four-wheel Alignment Inspection Adjustment**

Front Subframe Assembly
Remove

1. Remove and discard 1 bolt fixing the intermediate shaft universal joint to the steering gear input shaft.

2. Remove the front bottom deflector.

☞ **Bottom Deflector Remove**

3. Remove the front lower swing arm assembly (on both sides).

☞ **Front Lower Swing Arm Assembly Remove**

4. Remove 1 nut fixing the steering gear outer tie rod to the steering knuckle and discard it.

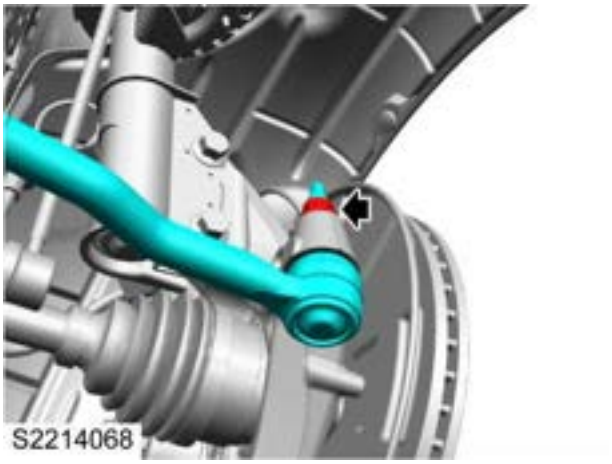

5. Use a tool to lock the ball joint of the front anti-roll bar link to prevent it from rotating, remove and discard 1 nut (on both sides) fixing the link to the front anti-roll bar.

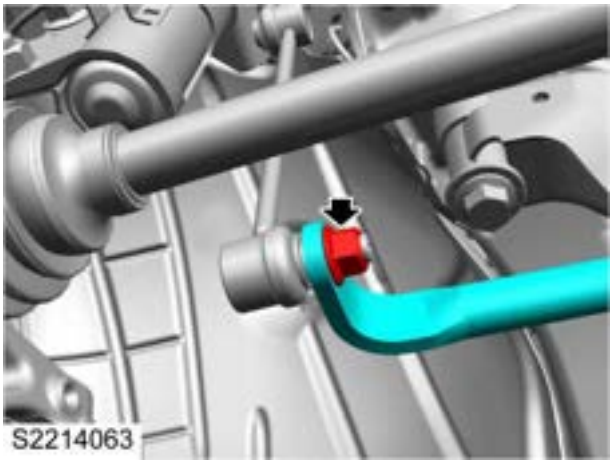

6. Support the engine and transmission assembly with the hydraulic lifting device.
7. Remove 1 bolt fixing the lower tie rod to the lower tie rod bracket.

8. Support the subframe with the hydraulic lifting device.
9. Remove and discard 4 bolts fixing the subframe to the body.

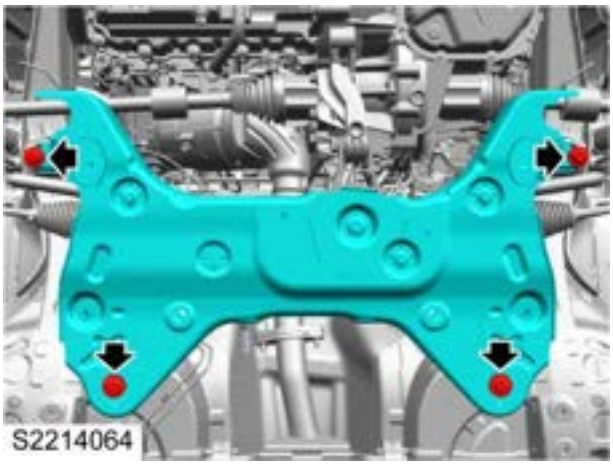

10. Lower the hydraulic lifting device to lower the subframe to the appropriate height.
11. Remove and discard 4 bolts fixing the anti-roll bar and anti-roll bracket to the front subframe.

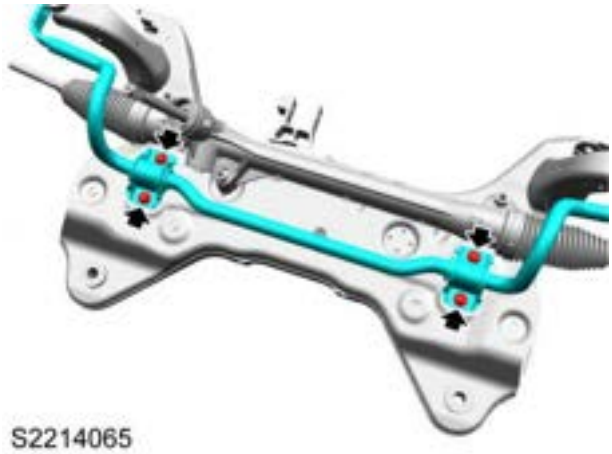

12. Remove and discard 3 bolts and nuts fixing the steering gear subassembly to the subframe.

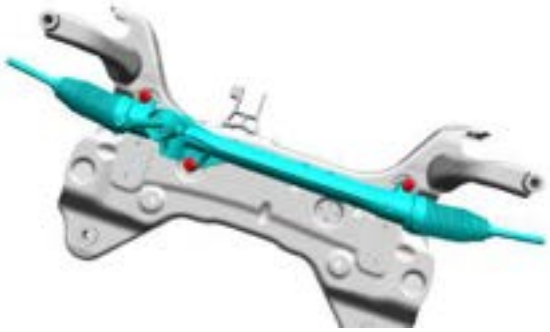

13. Remove and discard 1 bolt fixing the lower tie rod to the subframe.

Refit

1. Locate the lower tie rod to the front subframe assembly, fit 1 new bolt and tighten it to **(81-99)Nm+(85-95)°** .
2. Locate the steering gear subassembly to the front subframe, fit 3 new bolts and nuts, and tighten them to **(63-77)Nm+(85-95)°** .
3. Locate the front anti-roll bar and anti-roll bar bracket to the front subframe, fit 4 new bolts, and tighten them to **55-65Nm** .
4. Ensure that the junction of the front subframe assembly and the body is clean, and raise the front subframe assembly to each locating point of the body.
5. Locate the front subframe to the body, fit 4 new bolts, and tighten them to **(63-77)Nm+ (175-185) °** .
6. Locate the lower tie rod to the lower tie rod bracket, fit 1 bolt and tighten it to **(81-99) Nm+ (85-95) °** .
7. Locate the front anti-roll bar link to the front anti-roll bar (both sides). Fit 1 new nut, use a tool to lock the ball joint of the link to prevent its rotation, and tighten the nut to **75-90Nm** .
8. Locate the outer tie rod of steering gear to the steering knuckle (both sides), fit 1 new nut and tighten it to **40-50Nm** .
9. Lower the hydraulic lifter, and push it to the safety zone.
10. Fit the front lower swing arm assembly (both sides).

☞ **Front Lower Swing Arm Assembly Refit**

11. Fit the front bottom deflector.

☞ **Bottom Deflector Refit**

12. Locate the intermediate shaft universal joint to the steering gear input shaft, fit 1 new bolt and tighten it to **(18-22) Nm+ (115-125) °** .
13. Check the four-wheel alignment.

☞ **Four-Wheel Alignment Inspection Adjustment**

Front Horizontal Stabilizer Bar
Remove

1. Remove and discard 1 bolt fixing the intermediate shaft universal joint to the steering gear input shaft.

2. Remove the front bottom deflector.

☞ **Bottom Deflector Remove**

3. Remove the front lower swing arm assembly (on both sides).

☞ **Front Lower Swing Arm Assembly Remove**

4. Remove 1 nut fixing the steering gear outer tie rod to the steering knuckle and discard it.

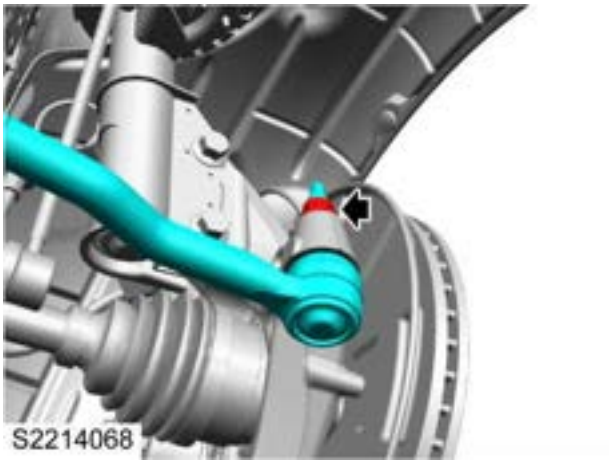

5. Use a tool to lock the ball joint of the front anti-roll bar link to prevent it from rotating, remove and discard 1 nut (on both sides) fixing the link to the front anti-roll bar.

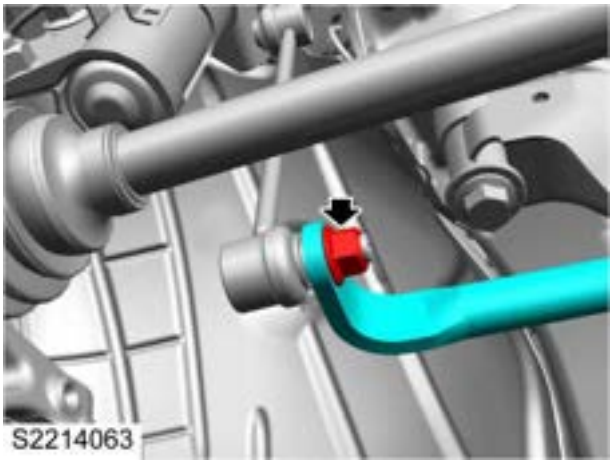

6. Support the engine and transmission assembly with the hydraulic lifting device.
7. Remove 1 bolt fixing the lower tie rod to the lower tie rod bracket.

8. Support the subframe with the hydraulic lifting device.
9. Remove and discard 4 bolts fixing the subframe to the body.

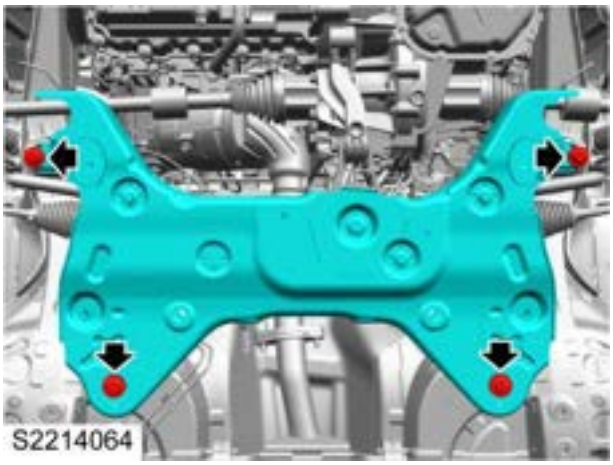

10. Lower the hydraulic lifting device to lower the subframe to the appropriate height.
11. Remove and discard 4 bolts fixing the anti-roll bar and anti-roll bracket to the front subframe.

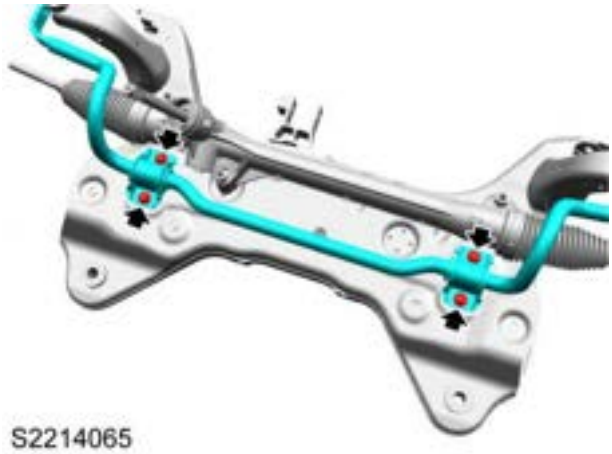

12. Remove the front stabilizer bar bushing.

Refit

1. Locate the front anti-roll bar, anti-roll bar bushing and anti-roll bar bracket to the front subframe, fit 4 new bolts, and tighten them to **55-65Nm** .
2. Ensure that the junction of the front subframe assembly and the body is clean, and raise the front subframe assembly to each locating point of the body.
3. Locate the front subframe to the body, fit 4 new bolts, and tighten them to **(63-77)Nm+ (175-185) °** .
4. Locate the lower tie rod to the lower tie rod bracket, fit 1 bolt and tighten it to **(81-99) Nm+ (85-95) °** .
5. Locate the front anti-roll bar link to the front anti-roll bar (both sides). Fit 1 new nut, use a tool to lock the ball joint of the link to prevent its rotation, and tighten the nut to **75-90Nm** .
6. Locate the outer tie rod of steering gear to the steering knuckle (both sides), fit 1 new nut and tighten it to **40-50Nm** .
7. Lower the hydraulic lifter, and push it to the safety zone.
8. Fit the front lower swing arm assembly (both sides).

☞**Front Lower Swing Arm Assembly Refit**

9. Fit the front bottom deflector.

☞**Bottom Deflector Refit**

10. Locate the intermediate shaft universal joint to the steering gear input shaft, fit 1 new bolt and tighten it to **(18-22) Nm+ (115-125) °** .
11. Check the four-wheel alignment.

☞**Four-Wheel Alignment Inspection Adjustment**

Front Horizontal Stabilizer Bar Connecting Rod

Remove

1. Raise the vehicle to the appropriate height.
2. Rotate the wheel to a proper position.
3. Use a tool to lock the ball joint of the front anti-roll bar link to prevent its rotation, remove and discard 1 nut (1) fixing the link to the front shock absorber assembly.
4. Use a tool to lock the ball joint of the front anti-roll bar link to prevent its rotation, remove and discard 1 nut (2) fixing the link to the front anti-roll bar.

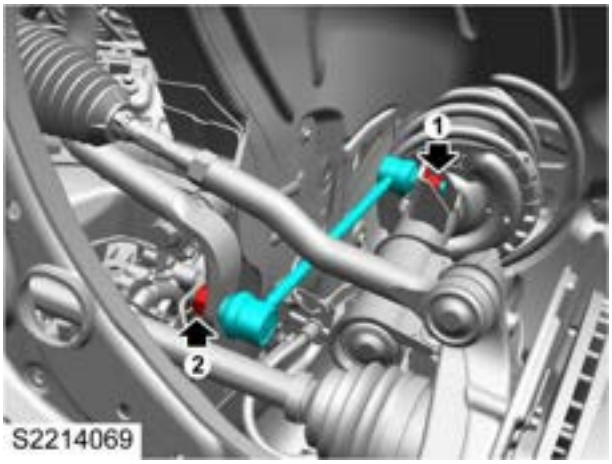

5. Disconnect the connection and remove the front anti-roll bar link.

Refit

1. Locate the front anti-roll bar link to the front anti-roll bar. Fit 1 new nut, use a tool to lock the ball joint of the link to prevent its rotation, and tighten the nut to **75-90Nm** .
2. Locate the front anti-roll bar link to the front shock absorber assembly. Fit 1 new nut, use a tool to lock the ball joint of the link to prevent its rotation, and tighten the nut to **75-90Nm** .
3. Rotate the wheel to its original position.
4. Lower the vehicle.

Front Wheel Hub Bearing Assembly
Remove

1. Pry off the wheel centre trim cover (if any), pry up the front axle shaft nut locking device with a tool, and remove and discard the axle shaft nut.

2. Remove the front brake caliper and the front brake disc.

☞ **Front Brake Disc Remove**

3. Remove 1 nut (1) fixing the steering gear outer tie rod to the steering knuckle, discard it and disconnect the connection.

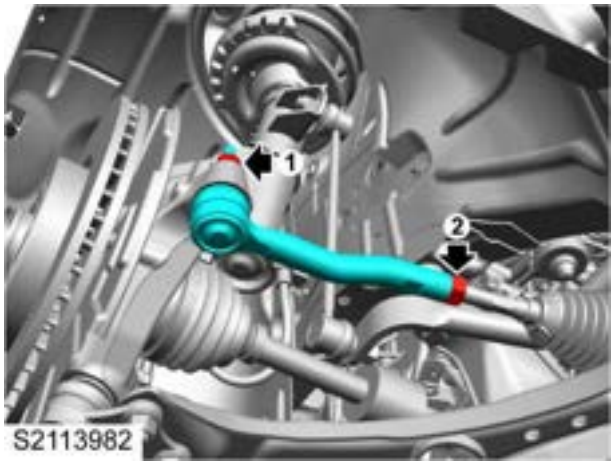

4. Support the front lower swing arm assembly and the steering knuckle assembly with the hydraulic lifting equipment.
5. Remove and discard 3 bolts and nuts fixing the outer ball joint of front lower swing arm to the front lower swing arm.

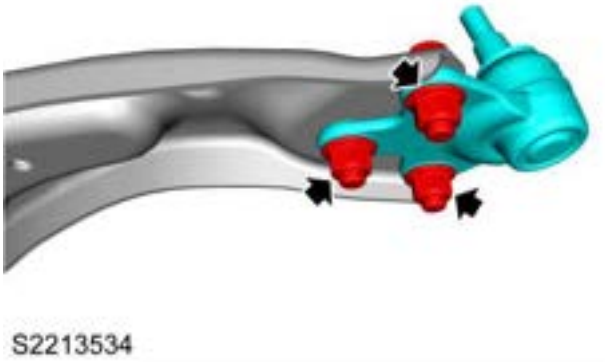

6. Remove and discard 1 bolt fixing the wheel speed sensor to the steering knuckle, remove the wheel speed sensor, and disengage the harness clip from the steering knuckle.

7. Remove 2 bolts and nuts (2) fixing the front shock absorber assembly to the steering knuckle and discard them.

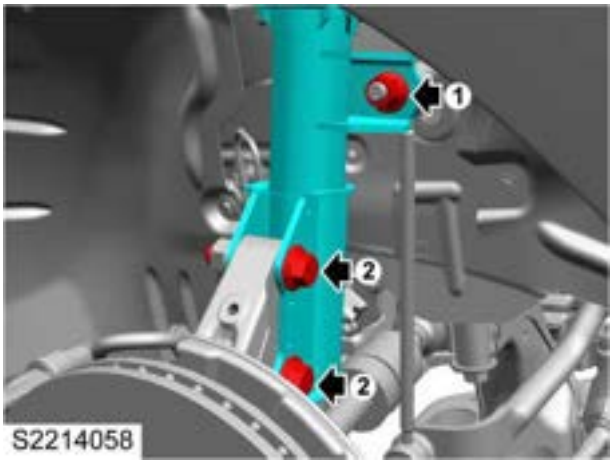

8. Pull the hub bearing assembly outward to disconnect the axle shaft assembly from the hub bearing assembly, and fix the axle shaft to a proper location.
9. Remove 3 bolts fixing the front wheel hub bearing assembly to the steering knuckle and discard them.

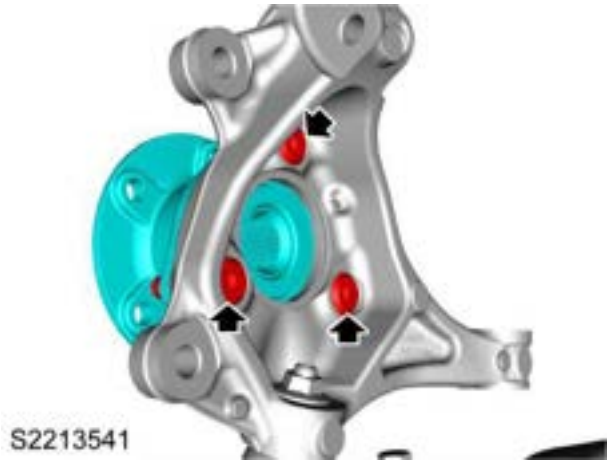

10. Remove the front wheel hub bearing assembly.

Refit

1. Clean the junction between the front wheel hub bearing assembly and the steering gear.
2. Locate the front wheel hub bearing assembly to the steering knuckle, fit 3 new bolts, first pre-tighten them and tighten them to **(63-77)Nm+(85-95)°** in a diagonal sequence.
3. Clean the junction surface of the axle shaft and the wheel hub bearing assembly, to allow the axle shaft to engage the wheel hub bearing splines.
4. Locate the front shock absorber assembly to the steering knuckle, fit 2 new bolts and nuts, and tighten them to **(135-165) Nm+ (85-95) °** .
5. Locate the wheel speed sensor to the steering knuckle, fit 1 bolt, tighten it to **7-10Nm** , and fix the wheel speed sensor harness to the steering knuckle.
6. Locate the outer ball joint of front lower swing arm to the front lower swing arm, fit 3 new bolts and nuts, and tighten them to **(81-99) Nm+ (85-95) °** .
7. Lower the hydraulic lifter, and push it to the safety zone.
8. Locate the outer tie rod of steering gear to the steering knuckle, fit 1 new nut and tighten it to **40-50Nm** .
9. Fit the front brake caliper and front brake disc.

☞**Front Brake Disc Refit**

10. Fit 1 new axle shaft locking nut, first pre-tighten 200Nm, loosen it reversely by 100° and then re-tighten it to **345-375Nm** , and press down the nut locking device.
11. If removed, fit the wheel centre trim cover.
12. Check the four-wheel alignment.

☞**Four-Wheel Alignment Inspection Adjustment**

Steering Knuckle

Remove

1. Remove the front hub bearing.

☞Front Wheel Hub Bearing Remove

2. Remove the front brake disc guard.

☞Front Brake Disc Guard Remove

3. Remove and discard 1 nut fixing the outer ball joint of front lower swing arm to the steering knuckle.

S2214073

4. Remove the ball joint of the front suspension control arm with the special tool TCH00125 .

S2213561

5. Remove the steering knuckle.

Refit

1. Locate the outer ball joint of front lower swing arm to the steering knuckle, fit 1 new nut and tighten it to **(18-22) Nm+ (85-95) °** .
2. Fit the brake disc guard plate.

☞Brake Disc Guard Plate Refit

3. Fit the front wheel hub bearing.

☞Front Wheel Hub Bearing Refit

4. Check the four-wheel alignment.

☞Four-Wheel Alignment Inspection Adjustment

Special Tool Summary Sheet

Special Tools

Tool Number	Description	Picture
TCH00125	Front lower rocker arm outer ball joint remover	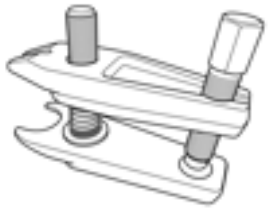 TCH00125
TCH00124	Front lower rocker arm rear bushing remover Front lower rocker arm rear bushing remover	TCH00124
TCH00126	Rocker arm bushing press tool	TCH00126

Tool Number	Description	Picture
T32016	Coil spring compressor	T32016
T32017	Adaptor coil spring compressor	T32017

Rear Suspension

Specification

Torque

Description	Value
Nut-Bottom rear damper	65-75Nm
Bolt-Rear damper to body	90-110Nm
Bolt&Nut-Rear suspension shock absorber to torsion-beam rear axle	90-110Nm
Bolt-Rear hub bearing to wheel bracket	(162-198) Nm+ (175-185) °
Bolt-Rear Wheel bracket to rear torsion beam	(27-33) Nm+ (85-95) °
Nut-Brake hose bracket to torsion-beam rear axle	15-19Nm
Bolt-Rear brake disc protector to rear brake caliper bracket	(27-33) Nm+ (85-95) °
Bolt-Torsion-beam rear axle to body	(135-165)Nm+(175-185)°
Bolt-Parking cable bracket to torsion-beam rear axle	19-25Nm

Parameters

Rear Coil Spring Parameters	
Total Coils	6.6
Effective Coils	5.6
Diameter of Spring Wire	10.7mm
Free Height	309.5mm

Description and Operation

System Layout

Rear Suspension Layout

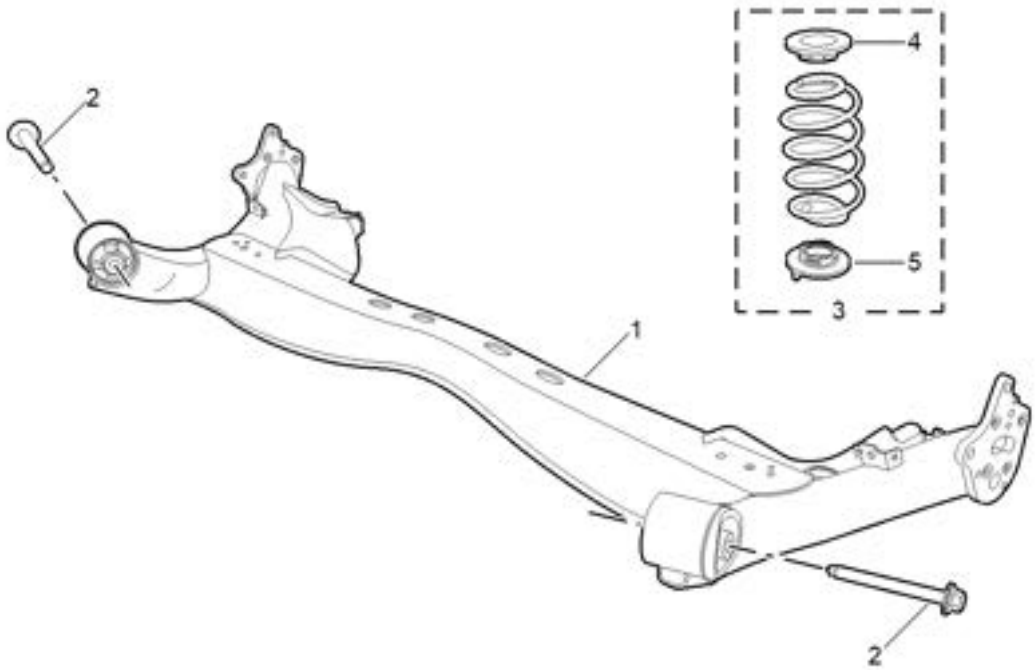

E222D051

1. Rear Torsion Beam Assembly
2. Tightening Bolt
3. Rear Suspension Spring Assembly
4. Upper Spring Pad
5. Lower Spring Pad

Exploded View of Rear Shock Absorber Assembly

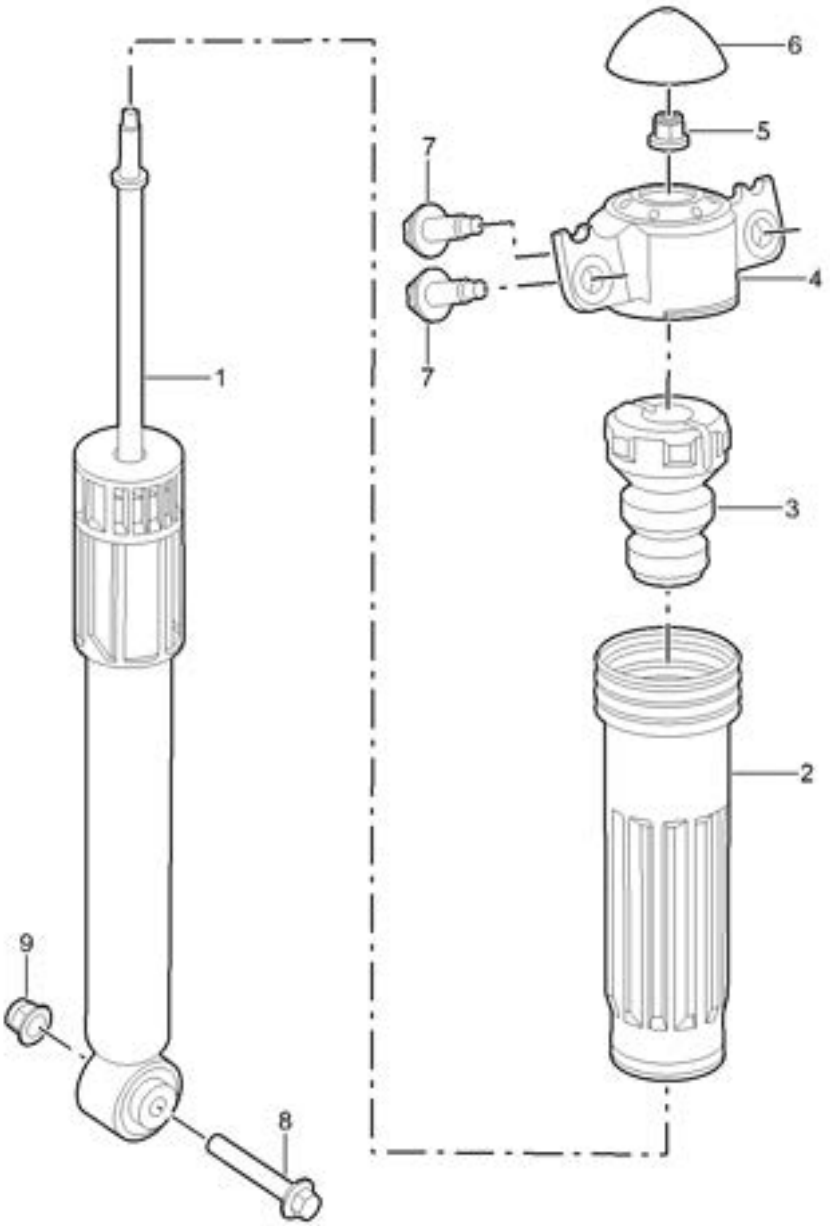

E222A059

1. Rear Shock Absorber Strut
2. Dust Cover
3. Auxiliary Spring
4. Upper Support Base
5. Upper Mounting Nut
6. Sound Insulation Cap
7. Upper Mounting Bolt
8. Rear Shock Absorber Bolt
9. Rear Shock Absorber Nut

Description

Overview

Rear suspension includes:

- Rear torsion beam
- 2 shock absorber assemblies
- 2 coil springs
- 2 wheel hub bearings
- 2 wheel brackets

Rear Torsion Beam

The left and right suspension trailing arms extend along the front/rear direction of the vehicle. Their front ends are supported on the vehicle body through fasteners, while the rear ends support the rear wheel through the wheel bracket and hub bearing. The torsion beam extends along the width direction of the vehicle, and its two ends are connected with the central part of the suspension trailing arms. The coil spring is arranged at the corner formed by the ends of the torsion beam and the rear part of the suspension trailing arms; the shock absorber mounting seat is arranged at the rear of the spring seat and used to fit the shock absorber.

Rear Shock Absorber

The rear shock absorber is of twin-cylinder structure, which can be gas charged and oil filled. This type of structure allows the movement of shock absorber piston inside the inner cylinder with an oil hole which is between the inner and outer cylinders. This structure minimises the cavitation and eliminates the influence of the piston motion due to the damage of outer cylinder. The lower part of the shock absorber is fitted with a non-repairable bushing, which is connected to the torsion beam with bolts and nuts. The rear shock absorber strut and upper mounting support are secured together with a lock nut. There is a dust shield over the lock nut for protection. The upper mounting support is connected with the body by two bolts. The bumper block is fitted on the rear shock absorber strut, which can provide buffering protection when the maximum compression stroke is achieved.

Coil Spring

The coil spring made of chrome steel is between the body and the torsion beam, and each spring is between the upper and lower spring vibration isolators which can reduce the noise transferred to the body from the suspension. Every vibration isolator is directly connected with the spring. The lower vibration isolator is fitted in a flat hole on the rear torsion beam, which is positioned linearly. When fitting, it must be aligned with the corresponding hole of rear torsion beam. The linear portion in the hole must well match for easy assembly.

Service Guide

Rear Shock Absorber Assembly

Remove

1. Remove the rear wheels.

Wheels Remove

2. Remove the rear wheelhouse liner.

Rear Wheelhouse Liner Remove

3. Raise the vehicle to a proper height, and support the rear torsion beam assembly with the hydraulic lifting equipment.
4. Remove and discard 1 bolt and nut (1) fixing the rear shock absorber assembly to the torsion beam.
5. Remove and discard 2 bolts (2) fixing the rear shock absorber assembly to the body.

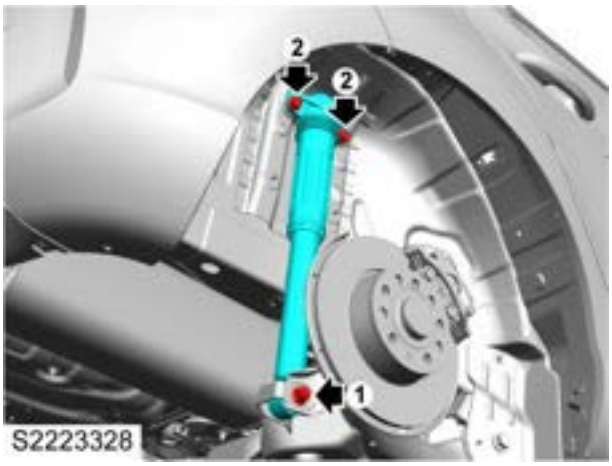

6. Remove the rear shock absorber assembly.
7. Remove the rear shock absorber dust cap, clamp the shock absorber strut with a tool to prevent its rotation, and remove the shock absorber top nut.
8. Remove the upper mounting bracket, bumper block and shock absorber dust shield in sequence.

Refit

1. Fit the shock absorber dust cap, buffer block and upper mounting bracket to the shock absorber strut in sequence.
2. Fit the shock absorber top nut, clamp the shock absorber strut with a tool to prevent its rotation, tighten the nut to **65-75Nm** , and fit the shock absorber dust cap.
3. Locate the rear shock absorber assembly to the body, fit 2 new bolts and tighten them to **90-110Nm** .
4. Locate the rear shock absorber assembly to the torsion beam, fit 1 new bolt and nut and tighten them to **90-110Nm** .
5. Move the hydraulic lifting equipment away.
6. Fit the rear wheelhouse liner.

Rear Wheelhouse Liner Refit

7. Fit the rear wheels.

Wheels Refit

Rear Suspension Spring Assembly

Remove

1. Raise the vehicle to a proper height, and support the torsion beam with the hydraulic lifting device.
2. Remove and discard the bolts and nuts (on both sides) fixing the rear shock absorber assembly to the torsion beam.

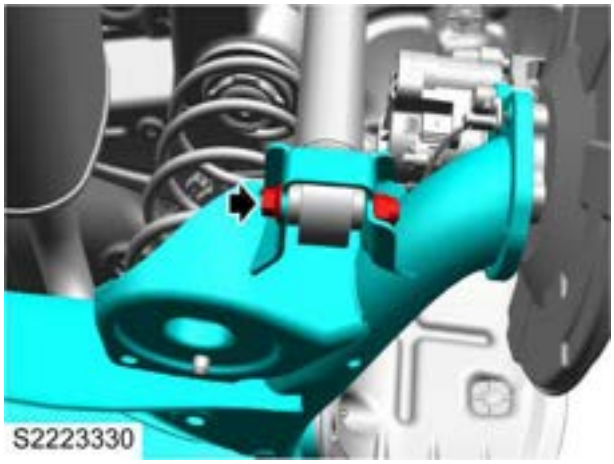

3. Lower the hydraulic lifting device to put the torsion beam in a proper position, remove the spring assembly, and remove the upper and lower spring vibration isolation pads.

Refit

1. Fit the upper and lower spring vibration isolators.
2. Fit the rear spring assembly to the torsion beam.
3. Locate the rear spring assembly to the body with the hydraulic lifting equipment.
4. Locate the rear shock absorber to the torsion beam, fit 1 new bolt and nut, and tighten them to **90-110Nm** .
5. Move the hydraulic lifting equipment away and lower the vehicle.

Rear Wheel Hub Bearing Assembly

Remove

1. Remove the rear wheels.

Wheels Remove

2. Remove the rear brake disc - models with disc brake.

Rear Brake Disc Remove

3. Remove the rear drum brake housing assembly - models with drum brake.

Rear Drum Brake Housing Assembly

4. Remove the rear wheel hub bearing grease cap, remove the rear wheel hub locking nut, and discard the grease cap and locking nut.

5. Remove the rear wheel hub bearing assembly.

Refit

1. Locate the rear wheel hub bearing to the wheel bracket.
2. Fit the new rear wheel hub bearing lock nuts, and tighten them to **(162-198) Nm+ (175-185) °** .
3. Fit the new rear wheel hub bearing grease cap.
4. Fit the rear brake disc and rear brake caliper - models with disc brake.

Rear Brake Disc Refit

5. Fit the rear drum brake housing assembly - models with drum brake.

Rear Drum Brake Housing Assembly

6. Fit the rear wheels.

Wheels Refit

Rear wheel bracket assembly

Remove

1. Remove the rear wheels.

Wheels Remove

2. Remove the rear wheel hub bearing assembly.

Rear Wheel Hub Bearing Assembly Remove

3. Remove the rear wheel bracket assembly - models with rear disc brake.

   a. Remove 4 bolts and gaskets fixing the rear wheel bracket assembly and rear brake disc guard plate to the torsion beam, and discard them.

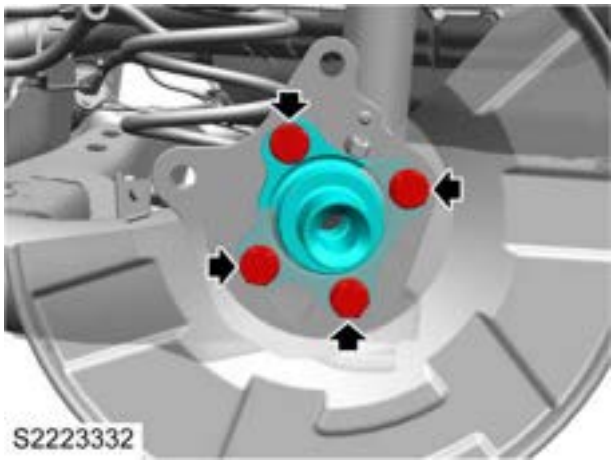

   b. Separate the rear brake disc guard plate from the wheel bracket assembly.

4. Remove the rear wheel bracket assembly - models with rear drum brake.

   a. Remove 1 connecting nut fixing the rear drum brake pipe to the rear drum brake backing plate, and disconnect the pipeline.

Caution : Before disconnecting or removing the brake lines, ensure the middle area around the lines and joints are clean. Plug the open joints to prevent the entry of pollutants.

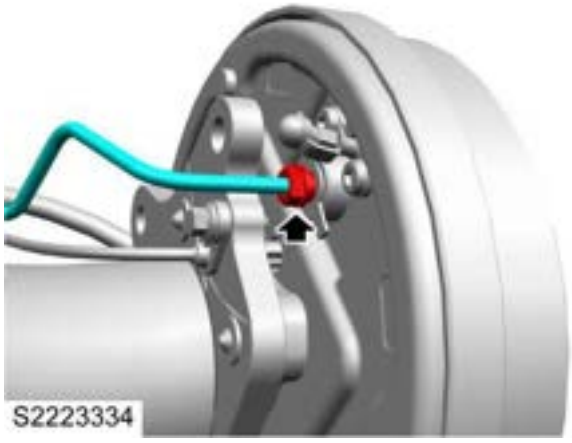

   b. Remove 4 bolts and gaskets fixing the rear wheel bracket assembly and rear drum brake backing plate assembly to the torsion beam, and discard them.

   c. Fix the rear drum brake backing plate to the appropriate position, and separate the wheel bracket assembly.

Refit

1. Models with Rear Drum Brake

   a. Locate the rear wheel bracket assembly and rear drum brake backplate assembly to the torsion beam, fit 4 new bolts and gaskets, and tighten them to **(27-33) Nm+ (85-95) °** .

   b. Remove the plug, locate the brake pipe connector of rear drum brake to the drum brake baseplate, and tighten the connector nut to **15-19Nm** .

   c. Drain the rear brake system.

Brake System Drain

2. Models with Rear Disc Brake

   a. Locate the rear brake disc guard plate and wheel bracket assembly to the torsion beam, fit 4 new bolts and gaskets, and tighten them to **(27-33) Nm+ (85-95) °** .

3. Fit the rear wheel hub bearing assembly.

Rear Wheel Hub Bearing Assembly Refit

4. Fit the rear wheels.

Wheels Refit

Remove

1. Remove the rear wheels (on both sides).

Wheels Remove

2. Remove the rear wheel bracket assembly (on both sides).

Wheel Bracket Assembly Remove

3. Remove the rear wheel speed sensor, and disconnect the clips (on both sides) fixing the wheel speed sensor harness to the torsion beam.

Rear Wheel Speed Sensor Remove

4. Remove 1 bolt (on both sides) fixing the parking motor harness bracket to the torsion beam - models with disc brake.
5. Remove 1 bolt (on both sides) fixing the hand brake cable bracket to the torsion beam - models with drum brake.

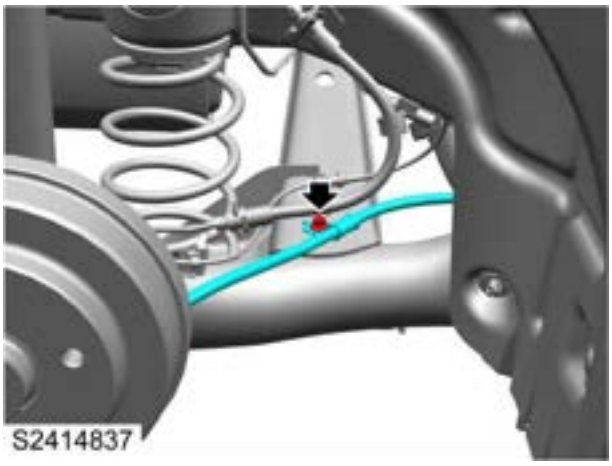

6. Support the torsion beam with the hydraulic lifting device.
7. Remove the rear suspension spring assembly (on both sides).

Rear Suspension Spring Assembly Remove

8. Remove the rear wheelhouse liner assembly (on both sides).

Rear Wheelhouse Liner Assembly Remove

9. Remove 1 bolt (on both sides) fixing the torsion beam to the body.

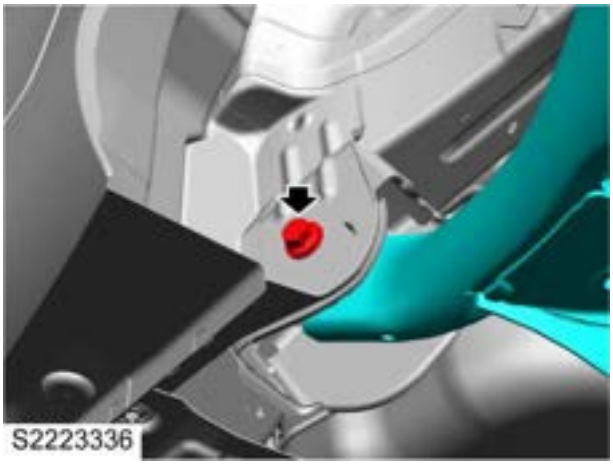

10. Slowly lower the hydraulic lifting device, pay attention to the position of the bushing to protect the bushing rubber from being scratched or cut. Remove the torsion beam assembly.

Refit

1. Locate the torsion beam assembly to the body with the hydraulic lifting equipment. During lifting and location, pay attention to the position of the bushing to protect the bushing rubber from being scratched or cut.
2. Fit 1 new bolt (both sides) fixing the torsion beam to the body, and tighten it to **(135-165)Nm+(175-185)°** .
3. Fit the rear wheelhouse liner assembly.

Rear Wheelhouse Liner Assembly Refit

4. Fit the rear suspension spring assembly.

Rear Suspension Spring Assembly Refit

5. Move the hydraulic lifting equipment away.
6. Fit 1 bolt (both sides) fixing the hand brake cable bracket to the torsion beam, and tighten it to **19-25Nm** - models with drum brake.
7. Fit 1 bolt (both sides) fixing the parking motor harness bracket to the torsion beam, and tighten it to **19-25Nm** - models with disc brake.
8. Fit the rear wheel speed sensor, and fit the harness clips (both sides) fixing the wheel speed sensor to the torsion beam.

Rear Wheel Speed Sensor Refit

9. Fit the wheel bracket assembly.

Wheel Bracket Assembly Refit

10. Fit the rear wheels.

Wheels Refit

Special Tool Summary Sheet

Special Tools

Tool Number
Description
Picture

Tyres and Wheels

Specification

Torque

Description	Value
Bolt-Wheel to hub	120-130Nm

Service Guide

Tyres and Wheels

Remove

1. Remove the wheel bolt caps (aluminum alloy rim) with the wheel bolt cap remover.
2. Remove the wheel trim cover to expose the wheel bolts (steel rim).
3. Loosen 5 wheel bolts counterclockwise for half a turn.
4. Raise the vehicle to the appropriate height.
5. Remove 5 wheel bolts and place them in the tool tray.
6. Remove the wheel, extract the wheel valve assembly, and discard it. Remove the tyre from the rim with a tyre changer.

Warning：Use a tyre changer to remove the tyre. Do not remove the tyre using a hand tool or tyre crowbar alone, otherwise wheel or tyre rim will be damaged.

Caution：Do not place the wheel hub down on the ground to avoid scratching.

Refit

Caution：Use scraper or wire brush to remove the corrosive on the mounting surfaces of the wheel, brake drum and brake disc before fitting wheels. Improper junction between the metal mounting surface and the metal will cause the wheel bolts to be loose when fitting wheels. This may cause the wheel to fall off while the vehicle is moving, resulting in vehicle control loss and even personal injuries.

1. Fit the new wheel valve assembly.
2. Fit the tyre with a tyre changer and inflate the tyre until the rim is in place. Ensure the locating ring at the outer side of the tyre bead is around the wheel rim flange on both sides. This method can ensure the correct position of the tyre bead.
3. Conduct wheel dynamic balancing with a tyre dynamic balancer.
4. Fit the wheel and tighten the wheel bolts until the wheel is located completely onto the wheel hub.
5. Lower the vehicle.
6. Tighten 5 wheel bolts to **120-130Nm** . For tightening order, please refer to the picture below (1 to 5).

Warning：If the vertical surface between the wheels, brake disc or drum is contaminated with oil, it will cause the wheels to become loose, resulting in vehicle control loss and even personal injuries. Never loosen a seized wheel by heating. This will shorten the life of the wheels, wheel bolts, hub and bearing assembly. Wheel bolts must be tightened in correct sequence to the correct torque to avoid distortion of wheels, brake disc and drum.

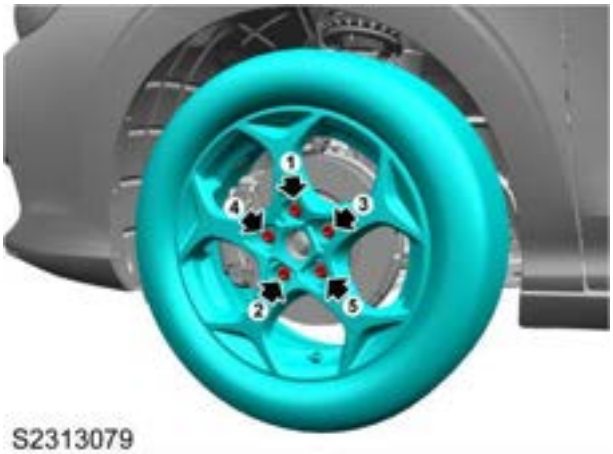

7. Fit the wheel trim cover (steel rim).
8. Fit the wheel bolt caps, and fit the wheel centre trim cover (aluminum alloy rim).

Tyre Pressure Monitoring System

Description and Operation

System Layout

Tyre Pressure Monitoring System (TPMS)

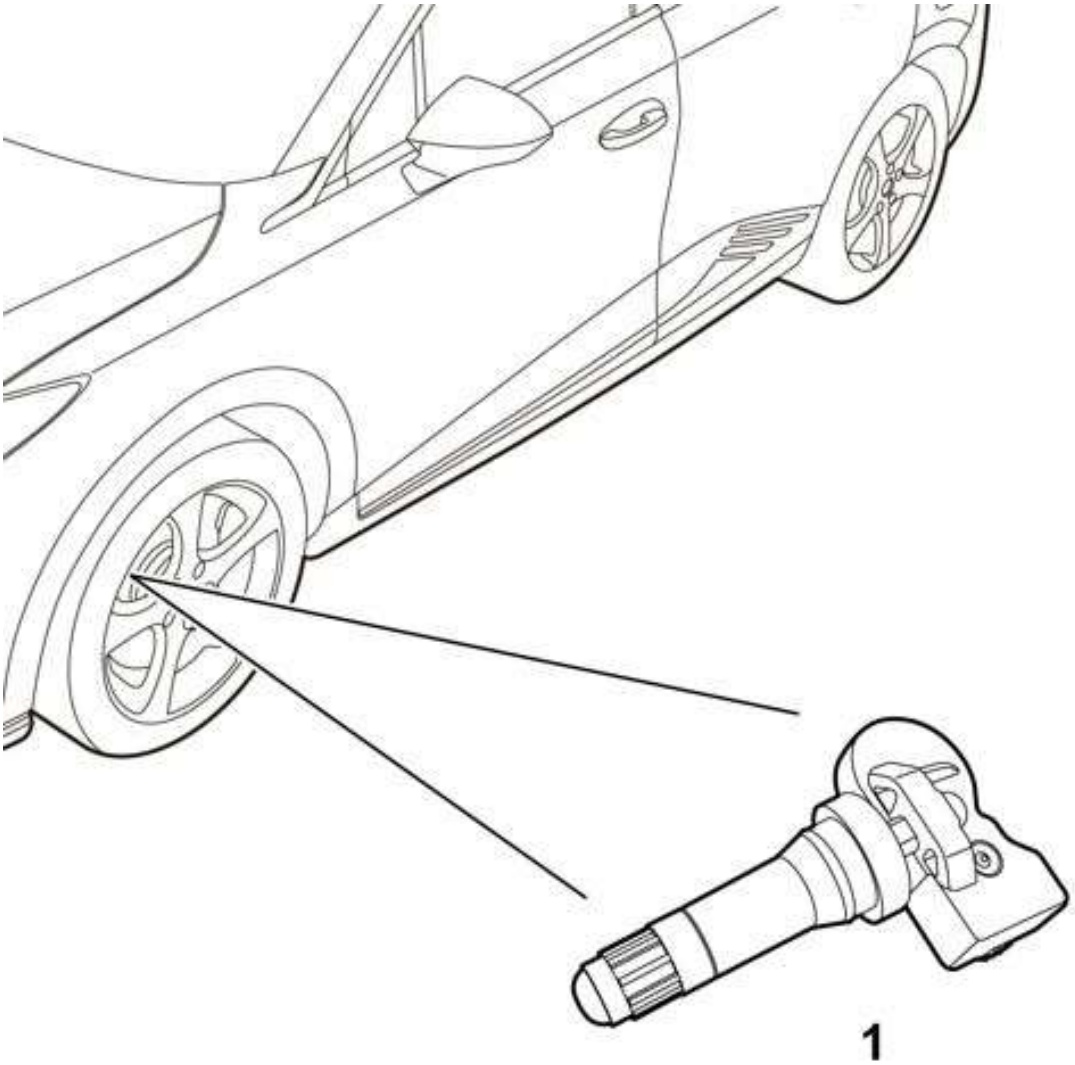

1. Tyre Pressure Sensor x 4

Description

The tyre pressure monitoring system consists of a body control module and tyre pressure sensors fitted in the valve cores of the four wheels. Each tyre pressure sensor features a electromechanical device for pressure and temperature measurement and has a unique serial number for identifying the mounting position of the sensor. The driver can view the pressure and position of tyres on the driver display. When the pressure of any of the four tyres rises or falls significantly, the TPMS warning lamp will illuminate to remind the driver to check the tyre.

Operation

When the body control module is operating, it receives the wireless signal from the tyre pressure sensor and converts its data into tyre pressure, tyre temperature, tyre position and sensor mode. The body control module sends the obtained tyre pressure, tyre temperature and tyre position data to the instrument pack via the CAN bus. When the vehicle is stationary, the sensor does not detect changes in acceleration, and the sensor enters the stationary mode. At this time, the sensor performs pressure sampling at intervals, and no signal is sent if the tyre pressure does not change. As the vehicle speed increases, the sensor detects the changes in acceleration, and enters the rolling mode. At this time, the sensor sends a signal to the module at intervals.

The tyre pressure sensor continuously compares its last sampled pressure with the current sampled pressure. If it detects that the difference between them reaches a certain value in the stationary or rolling mode, it will recheck the pressure to confirm the situation. When the sensor confirms that the tyre leaks quickly, it will send the corresponding wireless signal to the body control module, which will transfer the corresponding information to the instrument pack that displays the corresponding alarm message. When the tyre pressure monitoring system detects that the tyre pressure is (slowly) dropping to the warning limit, the corresponding messages Low Tyre Pressure or Check Tyre Pressure will be displayed on the instrument pack.

Indicator lamp and other reminder messages can be turned off through adjusting the tyre pressure above the recommended pressure value.

If the power supply of body control module is cut off or the vehicle battery is disconnected, each tyre pressure monitoring sensor identification code will be retained, but all the tyre pressure information will be lost. The instrument pack will display "–". Driving at a speed above 40km/h (25mph) can activate the sensor's rolling mode and transmit a signal, allowing the instrument to display the current tyre pressure again. When the vehicle is stationary, you can also reduce the tyre pressure (by more than 30 kPa) to make the sensor in the stationary mode send a signal, and the instrument will also display the current tyre pressure. The body control module is capable of detecting the internal failure of tyre pressure monitoring system. Read DTCs with an after-sale scan tool, and judge the failure cause according to the definition of failure.

Service Guide

Tyre Pressure Sensor

Remove

1. Remove the wheels.

Wheels Remove

2. Deflate the tyre.
3. Press the tyre at the valve core on the tyre changer until the tyre pressure sensor is exposed.
4. Remove the tyre pressure sensor and valve core assembly, and discard them.

S2313080

Refit

1. Fit the new tyre pressure sensor and valve core seat assembly to the wheel rim, and ensure that it is fitted in place.

Warning：Make sure that the tyre does not touch the tyre pressure sensor during removing and fitting.

2. Inflate the tyre to a suitable tyre pressure value.
3. Re-conduct tyre dynamic balancing.
4. Fit the wheels.

Wheels Refit

5. To perform a self-learning for the tyre sensor, refer to "Module Self-Learning and Programming - Body Control Module (BCM) - Tyre Sensor Replacement" to perform a self-learning for the tyre pressure monitoring system.

Body Control Module (BCM)

Brake System

Specification

Torque

Description	Value
Bolt-Front brake disc protector to brake caliper bracket	25-30Nm
Bolt-Brake hose to brake caliper	28-32Nm
Bolt-Front brake caliper bracket to steering hub assembly	190-210Nm
Screw-Front brake disc to front wheel carrier	7-10Nm
Bolt-Wheel	120-130Nm
Bolt-Front brake disc protector to steering knuckle	7-10Nm
Bolt-Rear brake disc protector to brake caliper bracket	25-30Nm
Bolt-Rear brake hose to brake caliper	28-32Nm
Bolt-Rear brake caliper bracket to rear brake caliper bracket	(81-99) Nm+ (85-95) °
Bolt-Rear EPB motor to rear brake caliper housing	8-9Nm
Screw-Rear brake disc to rear wheel hub bearing assembly	7-10Nm
Bolt-Rear brake disc protector to rear brake caliper bracket	(27-33) Nm+ (85-95) °
Nut-Remote reservoir to body	7-10Nm
Bolt-Reservoir to brake master cylinder	3.6-4.2Nm
Nut-Brake booster to body	19-25Nm
Nut- Brake pipe to brake regulator unit	15-19Nm
Bolt-Front wheel speed sensor to steering hub assembly	7-10Nm
Bolt-Rear wheel speed sensor to steering hub assembly	7-10Nm
Nut- Brake pedal push lever to front panel	19-25Nm
Bolt-Acceleration pedal to brake pedal	4-8Nm
Nut-Left front brake pipe to front brake hose	15-19Nm
Nut-Left front brake pipe to brake governor	15-19Nm
Nut-Right front brake pipe to front brake hose	15-19Nm
Nut-Right front brake pipe to brake governor	15-19Nm
Nut-Connecting pipe to rear brake pipe	13-15Nm
Nut-right rear Brake pipe to right rear brake hose	15-19Nm
Nut-Connecting pipe-Brake governor to rear brake pipe and rear brake pipe	13-15Nm
Nut-left rear Brake pipe to left rear brake hose	15-19Nm
Bolt-Brake hose bracket to front shock absorber strut	10-15Nm
Nut-Brake pipe to brake hose	15-19Nm
Bolt-Brake hose to brake caliper shuck assembly	28-32Nm

Description	Value
Screw-Rear emptying screw	17-18Nm
Screw-Front emptying screw	16-18Nm

Parameters

Item		Parameters
Front Brake Disc	Diameter	280mm
	Thickness	22mm
	Minimum Allowable Thickness	20mm
	Runout	0.05mm
Front Brake System Friction Plate	Thickness	10mm
	Minimum Allowable Thickness	2mm
Rear Brake Disc	Diameter	272mm
	Thickness	10mm
	Minimum Allowable Thickness	8mm
	Runout	0.05mm
Rear Brake System Friction Plate	Thickness	10.5mm
	Minimum Allowable Thickness	2mm

Description and Operation

System Layout

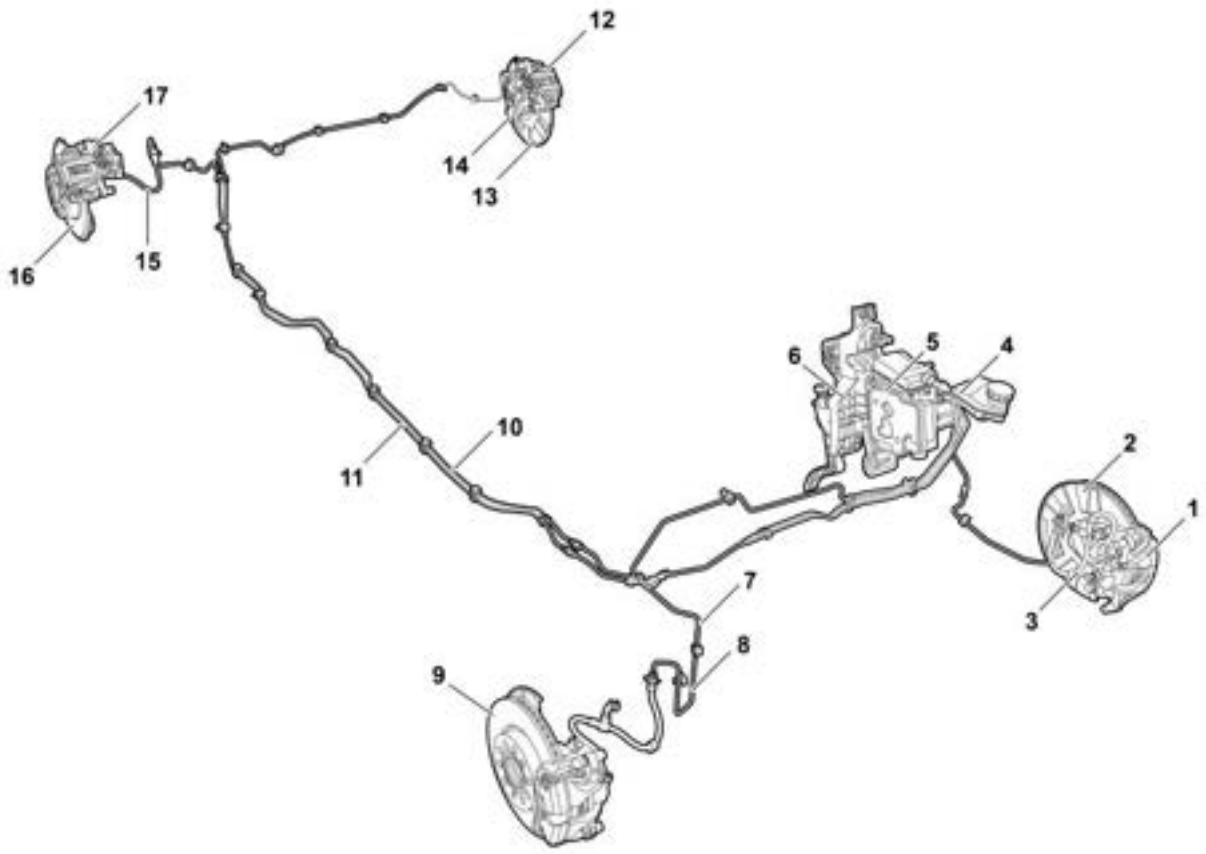

S2410185

1. Front Brake Caliper Assembly
2. Front Brake Disc Guard
3. Front Left Brake Hose
4. Fluid Reservoir
5. Brake Modulator Assembly - IBS
6. Brake Pedal Assembly
7. Front Right Brake Pipe
8. Front Right Brake Hose
9. Front Brake Disc
10. Rear Left Brake Pipe
11. Rear Right Brake Pipe
12. Rear Brake Caliper Assembly
13. Rear Brake Disc Guard Plate
14. Rear Left Brake Hose
15. Rear Right Brake Hose
16. Rear Brake Disc
17. Parking Motor Assembly

System Control Diagram

Parking Brake System Control Diagram

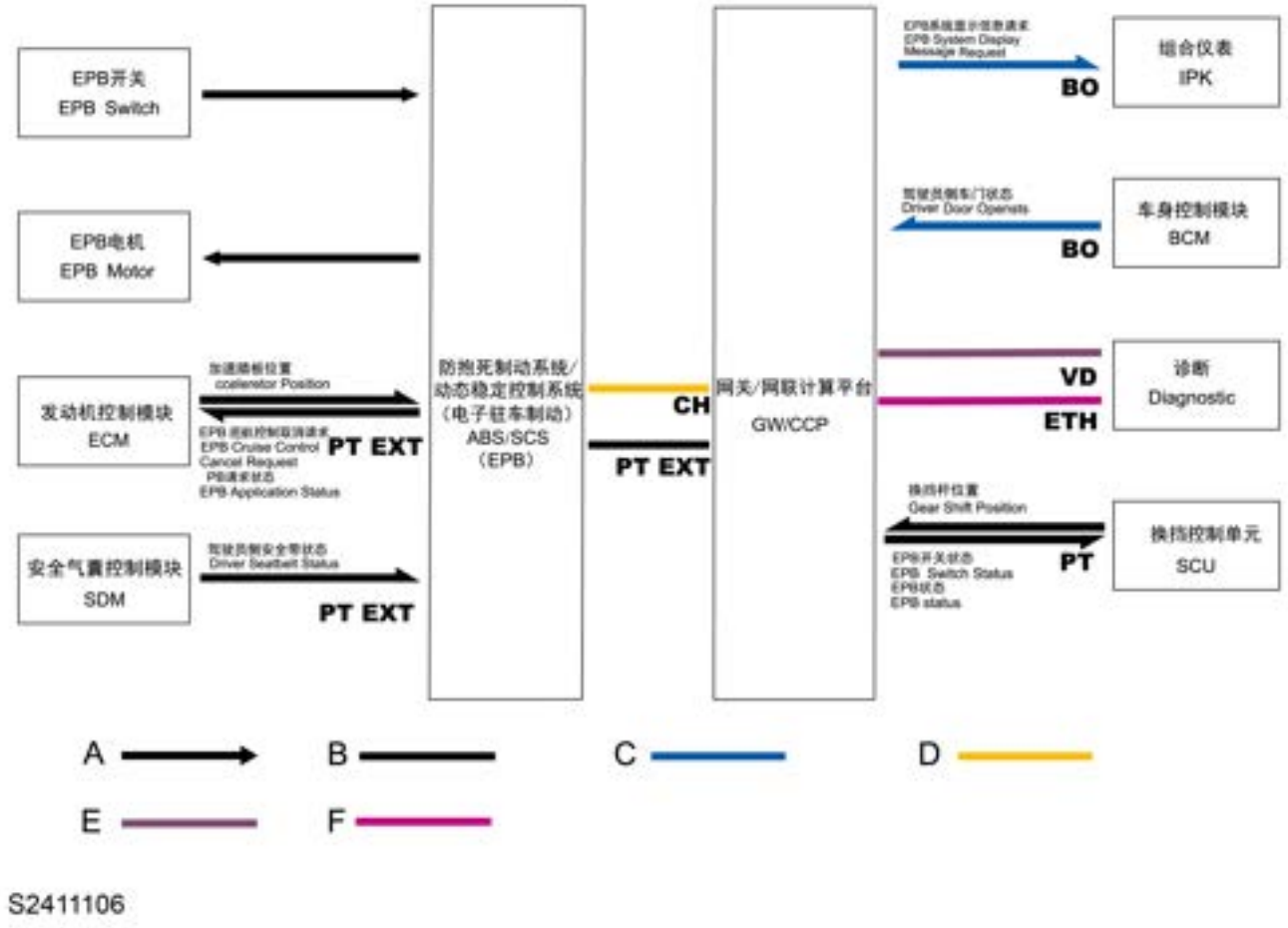

A = Hard Wire; B = Power HS CAN Bus/Power Extension CAN Bus; C = Body HS CAN Bus; D = Chassis HS CAN Bus; E = Diagnosis HS CAN Bus; F = Ethernet

Description

Overview

The brake system consists of the front/rear disc brakes which are controlled by the dual-circuit hydraulic brake system with the vacuum booster in the diagonal way. The brake system also contains the anti-lock braking system (ABS), electronic braking force distribution (EBD) and other functions.

Hydraulic System Schematics

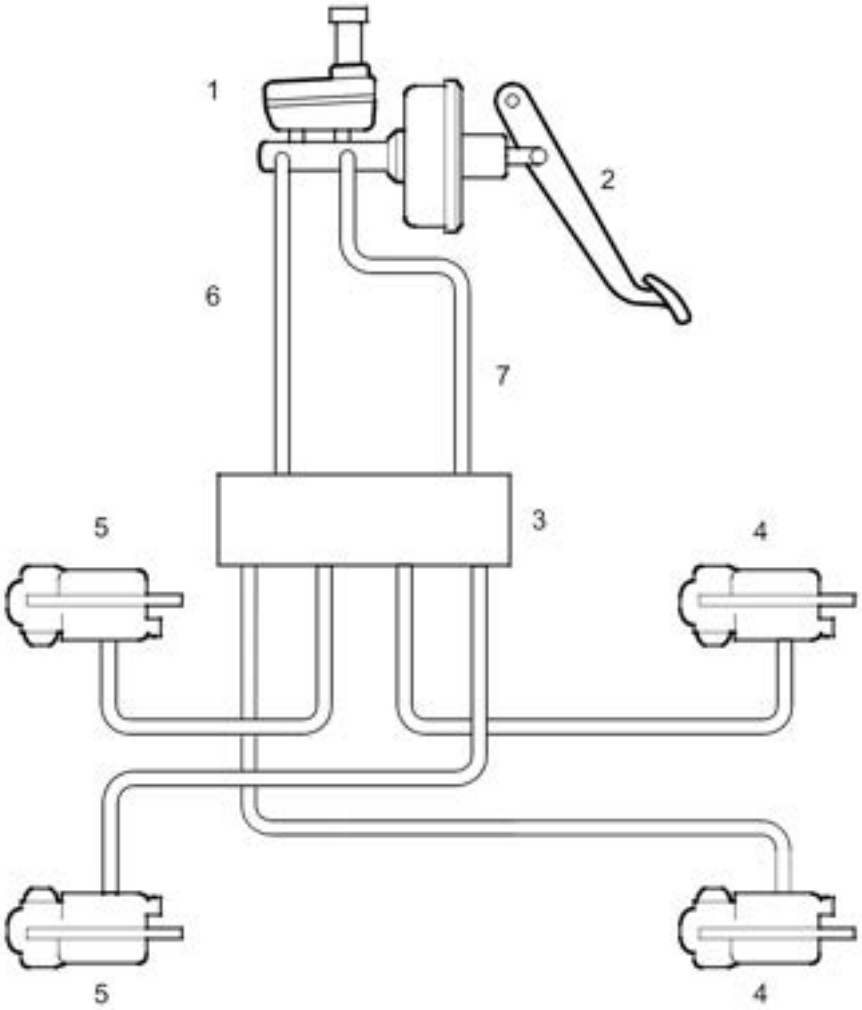

S2410108

1. Brake Master Cylinder Vacuum Booster Assembly
2. Brake Pedal
3. Brake Modulator Unit Assembly
4. Rear Brake Angle
5. Front Brake Angle
6. Secondary Hydraulic Circuit
7. Primary Hydraulic Circuit

Under normal operating conditions, the displacement of the brake pedal is boosted and delivered by the vacuum booster assembly to the brake master cylinder assembly. The brake master cylinder assembly converts the movement of brake pedal into hydraulic pressure. The primary and secondary hydraulic circuit pipes deliver the hydraulic pressure to the brake through the brake modulator unit assembly. The primary circuit supplies pressure to the left front and right rear brakes, and the secondary circuit supplies pressure to the right front and left rear brakes. The vacuum of the vacuum booster assembly is obtained through a vacuum pipeline and check valve from the engine intake manifold and electronic vacuum pump.

For the functions such asABS andEBD , the brake modulator unit assembly adjusts the hydraulic pressure of the brake and controls the speed of a single wheel or two wheels on the same

axle. These functions are controlled by theECU integrated in the brake modulator unit assembly. TheECU also controls the alarm device on the IPK, which provides the status information of each function for the driver.

Wheel Speed Sensor

The wheel speed sensors are active sensors (i.e. they receive the power supply from theABS modulator), and they transmit the wheel speed signal to theABS modulator. The sensors are fitted on the steering knuckle of each front suspension and the wheel bracket of each rear suspension, which are extremely close to the inner sealing device of each relevant wheel bearing. Rotating together with the wheels, the sealing device includes a magnetic element with 48 pairs of magnetic poles, when the wheels rotate, the magnetic poles in the sealing device generates voltage fluctuation in theABS sensor, the voltage fluctuation is converted into square wave signal and output to theABS modulator. The signal frequency is proportional to the wheel speed.

Operation

Brake Pedal

The brake pedal is fitted on the shaft of the brake pedal mounting bracket located on the dash panel, and is connected to the master cylinder booster push rod with the brake pedal booster connector.

Brake Lamp Signal Sensor

The brake lamp signal sensor is fitted outside the housing of the brake master cylinder, which works with a permanent magnet ring fitted on the brake master cylinder piston. The sensor operates based on the Hall effect, which means that the Hall element generates a Hall voltage in a magnetic field, and the Hall voltage changes with the strength of the magnetic field. When braking is applied, the piston of the brake master cylinder moves relative to the housing of the brake master cylinder, and correspondingly, the permanent magnetic ring fitted on the piston and the brake lamp sensor on the housing undergo relative motion, resulting in a change in the magnetic field strength through the brake lamp signal sensor, so that the sensor generates a changing voltage signal, reflecting the current braking state. When releasing the brake, the piston and the permanent magnetic ring fitted on the master cylinder return to their original positions due to the return force from the booster.

Brake Pedal Position Sensor Assembly

The brake pedal position sensor is fitted on the brake pedal bracket, which is used for sensing the driver's action in operating brake pedal. The brake pedal position sensor provides an analog voltage signal to the engine control module (ECM). When the brake pedal is depressed, the signal will increase.

Vacuum Booster Assembly

The vacuum booster provides the assist power during braking to reduce the pedal force required for braking. In case that the vacuum booster assembly fails, the hydraulic system still has the brake function, but a greater pedal braking force is required due to lack of vacuum assist power.

The vacuum booster assembly is composed of the front/rear housing, diaphragm, vacuum valve, air valve, input push rod and output push rod; the front chamber composed of the diaphragm and the front housing is the vacuum chamber, and the rear chamber composed of the diaphragm and the rear housing is the working chamber.

The rear housing of booster assembly is fitted on the dash panel of the body by four studs and connected to the brake pedal by the input push rod; the front housing of booster assembly is connected to the engine intake pipe or the electric vacuum pump by the vacuum pipe. The front housing of booster is connected to the brake master cylinder by two retaining bolts; the output push rod is located in the piston of the brake cylinder to push the piston of the brake cylinder to operate. When the vacuum booster assembly works, a pressure difference is generated between the front and rear chambers to push the output push rod so as to provide power assists.

Brake Master Cylinder Assembly

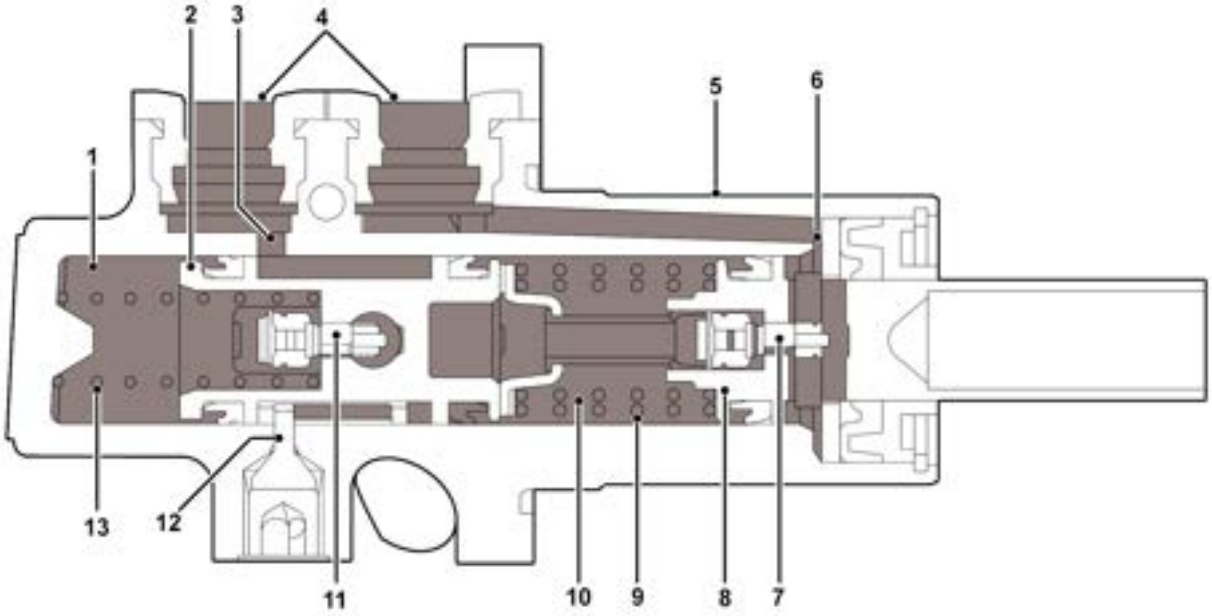

S2410127

1. Secondary Pressure Chamber
2. Secondary Piston
3. Secondary Oil Inlet
4. Brake Fluid Reservoir Port
5. Brake Master Cylinder
6. Primary Oil Inlet
7. Primary Centre Valve
8. Primary Piston
9. Primary Spring
10. Primary Pressure Chamber
11. Secondary Centre Valve
12. Valve Pin
13. Secondary Spring

The brake master cylinder assembly is mounted in front of the vacuum booster, and when the brake pedal is depressed, it generates hydraulic pressure to make the brake work.

The brake master cylinder assembly includes a pump body with two pressure chambers: the primary pressure chamber, which houses the primary piston responsible for generating braking pressure in the primary circuit, and the secondary pressure chamber, which houses the secondary piston responsible for generating braking pressure in the secondary circuit. The brake fluid reservoir is fitted at the top of the master cylinder. The fluid reservoir is partitioned inside to feed liquid for every brake circuit independently, thus avoiding the condition that neither the primary brake circuit nor the secondary brake circuit can operate due to one brake fluid leakage. If one brake circuit is out of order, the remaining brake circuits can still effectively operate, but the brake pedal stroke and the braking distance of the vehicle will increase.

Front Brake

The front brake consists of a brake caliper assembly, a brake disc and a brake disc guard plate. The brake caliper assembly is of single-piston floating type, which is mounted on the steering knuckle. The brake disc is a ventilated disc, and the inner guard plate protects the brake disc. When the hydraulic pressure is transmitted to the brake caliper, the piston stretches outward, forcing the inner brake friction plate to press against the brake disc. Meanwhile, the brake caliper housing under hydraulic reaction slides along the guide pin to drive the outer brake friction plate to come into contact with the brake disc.

Rear Brake

The rear brake consists of a brake caliper assembly, a brake disc and a brake disc guard plate. The brake caliper assembly is of single-piston floating type, which is mounted on the wheel bracket. The inner guard plate protects the brake disc. When the hydraulic pressure is transmitted to the brake caliper, the piston stretches outward, forcing the inner brake friction plate

to press against the brake disc. Meanwhile, the brake caliper housing under hydraulic reaction slides along the guide pin to drive the outer brake friction plate to come into contact with the brake disc. A parking motor is also mounted on the rear brake caliper assembly. When the parking motor works, it also extends the piston outwards to force the inner and outer brake friction plates to clamp the brake disc.

Detailed Information List of Component Pins

End View and Pin Information of Brake Modulator Harness Connector FC203

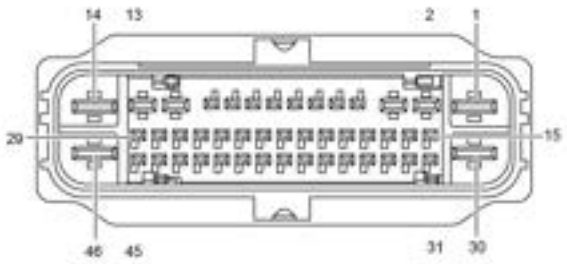

Pin No.	Pin Functions
1	KL30.1
2	Rear Right EPB Motor +
3	Rear Right EPB Motor -
4	Front Right Wheel Speed Sensor - (Ground)
5	Front Right Wheel Speed Sensor + (Signal)
6	Rear Left Wheel Speed Sensor - (Ground)
7	Rear Left Wheel Speed Sensor + (Signal)
8	Front Left Wheel Speed Sensor - (Ground)
9	Front Left Wheel Speed Sensor + (Signal)
10	Rear Right Wheel Speed Sensor - (Ground)
11	Rear Right Wheel Speed Sensor + (Signal)
12	Rear Left EPB Motor -
13	Rear left EPB motor +
14	GND (Ground)
15	-
16	-
17	EPB Switch Signal 1
18	EPB Switch Signal 4
19	EPB Switch Signal 3
20	-
21	AutoHold Switch Signal
22	Brake Fluid Level Sensor Switch Signal
23	-
24	EPB Switch Signal 2
25	-
26	-
27	EPB Switch Indicator
28	-
29	-
30	KL30.2
31	Chassis CAN High
32	Chassis CAN Low
33	-
34	-
35	Ign Relay (Relay)
36	-
37	-
38	-
39	-
40	-
41	-
42	PT Extended CAN High
43	PT Extended CAN Low
44	-
45	-
46	-

Service Guide

Safety Instructions

Warning：

The integrated braking system (IBS) will perform a self-test after the vehicle is powered off. It will build up oil pressure and push the caliper to clamp the friction lining. If the hydraulic pipeline is disconnected at this time, the brake fluid will be injected at high speed.

In order to prevent personal injury caused by misoperation, please disconnect the negative battery cable to prevent the system from performing self-test before repairing components related to the brake hydraulic pressure; if any operation must be performed while the vehicle is powered on, please pay attention to the protection of personnel safety.

Caution：

During self-test, the situation that the brake pedal can not be depressed or is slightly hard may occur.

Remove

1. Remove the front wheels.

Wheels Remove

2. Remove the stop spring of the front brake caliper.

3. Remove the front brake caliper guide bolt cover, remove and discard 2 guide pin bolts fixing the front brake caliper housing to the front brake caliper bracket.

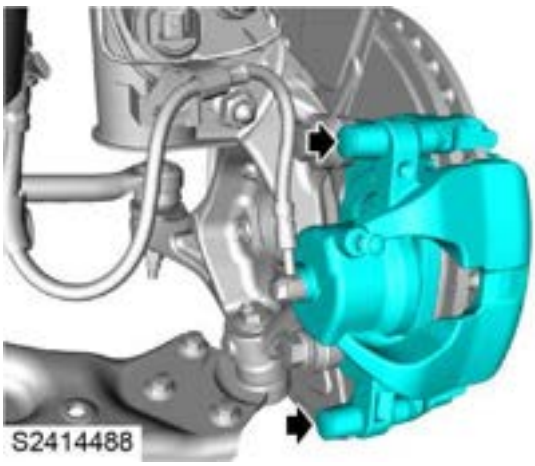

4. Remove the front brake caliper housing and fix it in a proper position.

Caution：Do not hang the brake caliper on the brake hose.

5. Remove the front brake friction plate.

Refit

1. Clean the front brake disc, front brake caliper housing and front brake caliper bracket, and check the front brake caliper and seals for damage.
2. Fit the front brake friction plate to the front brake caliper bracket.
3. Use a tool to press the piston in the front brake caliper housing backward to a proper position.
4. Locate the front brake caliper housing to the front brake caliper bracket, fit 2 new guide pin bolts, tighten them to **25-30Nm** , and fit the front brake caliper guide bolt covers.
5. Fit the stop spring of front brake caliper.
6. Depress the brake pedal several times to position the front brake friction plate.

Tip：Pedal travel may be longer than normal during first brake application.

7. Fit the front wheels.

Wheels Refit

Front Brake Caliper Housing Assembly

Remove

1. Remove the front wheels.

Wheels Remove

2. Place a proper container under the vehicle to collect the spilled fluid.
3. Remove 1 bolt and 2 gaskets fixing the front brake hose to the front brake caliper assembly, discard the gaskets and disconnect the pipeline.

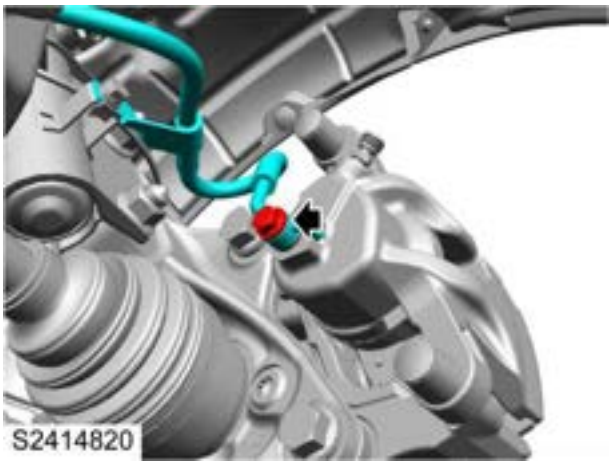

Caution : Before disconnecting or removing the brake lines, ensure the middle area around the lines and joints are clean. Plug the open joints to prevent the entry of pollutants.

4. Remove the stop spring of the front brake caliper.

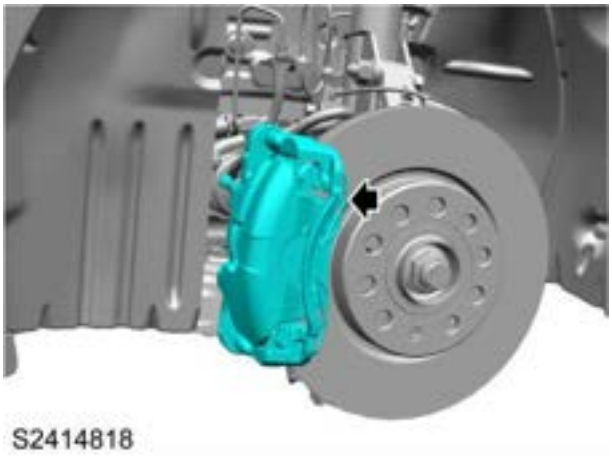

5. Remove the front brake caliper guide bolt cover, remove and discard 2 guide pin bolts fixing the front brake caliper housing to the front brake caliper bracket.

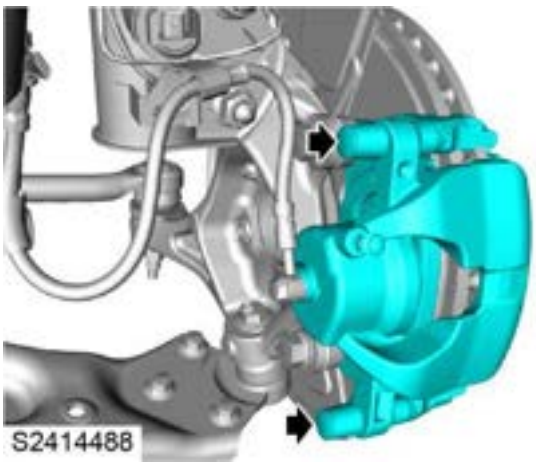

6. Gently remove the front brake caliper housing assembly with a tool.

Refit

1. Clean the front brake disc, front brake caliper housing and front brake caliper bracket, and check the front brake caliper and seals for damage.
2. Locate the front brake caliper housing assembly to the front brake caliper bracket, fit 2 new guide pin bolts, tighten them to **25-30Nm** , and fit the front brake caliper guide bolt covers.
3. Fit the stop spring of front brake caliper.
4. Locate the front brake hose to the front brake caliper housing assembly, fit 2 new gaskets and 1 bolt, and tighten them to **28-32Nm** .
5. Bleed the brake system.

Brake System Drain

6. Fit the front wheels.

Wheels Refit

Front Brake Caliper Bracket Assembly

Remove

1. Remove the front wheels.

☞ Wheels Remove

2. Remove the stop spring of the front brake caliper.

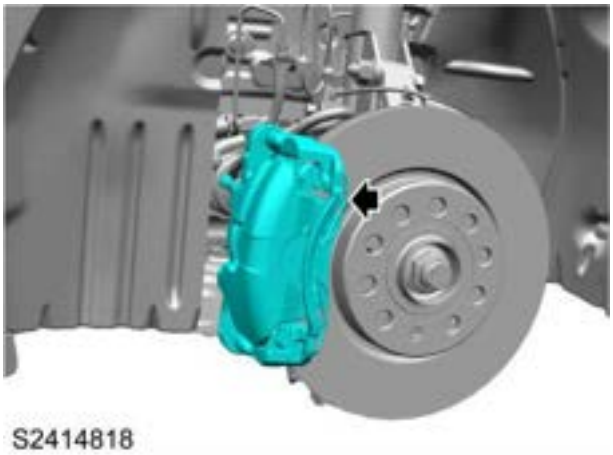

3. Remove the front brake caliper guide bolt cover, remove and discard 2 guide pin bolts fixing the front brake caliper housing to the front brake caliper bracket.

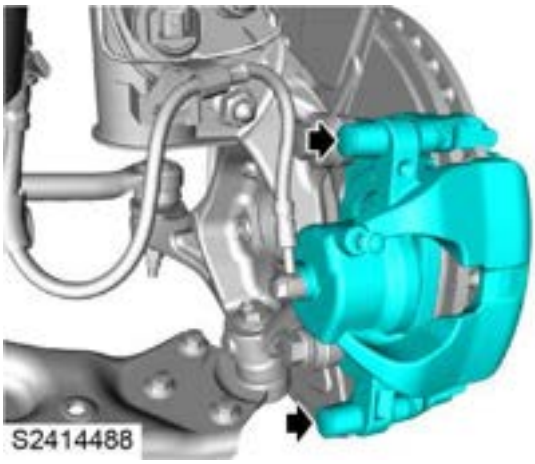

4. Remove the front brake caliper housing and fix it in a proper position.

Caution：Do not hang the brake caliper on the brake hose.

5. Remove the front brake friction plate.
6. Remove and discard 2 bolts fixing the front brake caliper bracket to the steering knuckle.

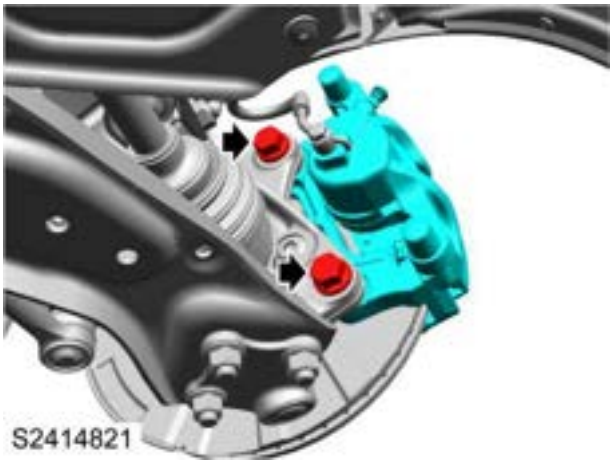

7. Remove the front brake caliper bracket assembly.

Refit

1. Clean the front brake disc, front brake caliper housing and front brake caliper bracket, and check the front brake caliper and seals for damage.
2. Locate the front brake caliper bracket to the steering knuckle, fit 2 new bolts and tighten them to **190-210Nm** .
3. Fit the front brake friction plate to the front brake caliper bracket.
4. Use a tool to press the piston in the front brake caliper housing backward to a proper position.
5. Locate the front brake caliper housing to the front brake caliper bracket, fit 2 new guide pin bolts, tighten them to **25-30Nm** , and fit the front brake caliper guide bolt covers.
6. Fit the stop spring of front brake caliper.
7. Depress the brake pedal several times to position the front brake system friction plate.

Tip：Pedal travel may be longer than normal during first brake application.

8. Fit the front wheels.

☞ Wheels Refit

Front Brake Disc

Remove

1. Remove the front wheels.

Wheels Remove

2. Remove and discard 2 bolts fixing the front brake caliper assembly to the steering knuckle.

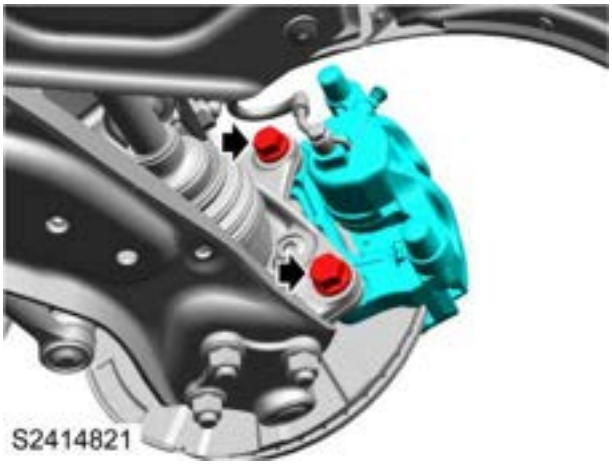

3. Remove the front brake caliper assembly and fix it in a proper position.

Caution：Do not hang the brake caliper on the brake hose.

4. Remove 1 countersunk head screw fixing the front brake disc to the front wheel hub bearing assembly.

5. Remove the front brake disc.

Refit

1. Ensure the junction surface between the front brake disc and the front wheel hub bearing assembly is clean.
2. Locate the front brake disc to the front wheel hub bearing assembly, fit 1 countersunk head screw, and tighten it to **7-10Nm** .
3. Remove the front brake caliper assembly, and use a tool to press the piston in the front brake caliper housing assembly backward to a proper position.
4. Locate the front brake caliper assembly to the steering knuckle, fit 2 new bolts and tighten them to **190-210Nm** .
5. Fit the front wheels.

Wheels Refit

Thickness and Circular Runout Check

1. Remove the front wheels.

Wheels Remove

2. Remove and discard 2 bolts fixing the front brake caliper assembly to the steering knuckle.

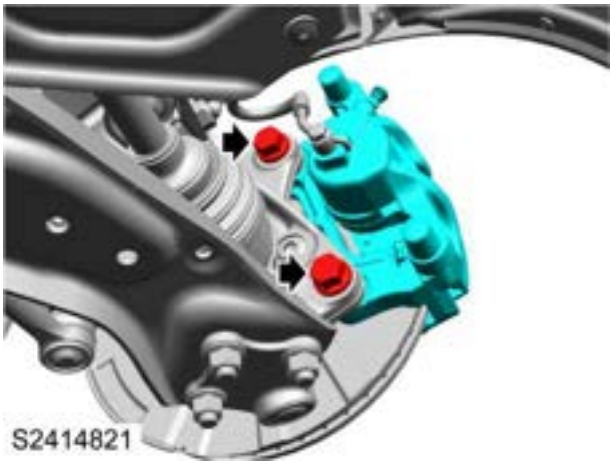

3. Remove the front brake caliper assembly and fix it in a proper position.

Caution：Do not hang the brake caliper on the brake hose.

4. Measure the thickness of the front brake disc at four equal division points on the surface of front brake disc with a differential gauge/micrometre, and ensure the measurement points are located 10mm inward from the edge of the front brake disc. If the thickness of the front brake disc is lower than the specified minimum value (see brake parameters for details), replace the front brake disc.

Caution：Brake discs must be replaced in pairs, unless the disc is just replaced with a new one with less than 1500 km.

5. Fit 5 wheel bolts, and tighten them to **120-130Nm** .
6. Fit the dial indicator to TCH00022 , use the front brake caliper assembly to assemble bolt holes, fix the TCH00022 to the inner side of the front steering knuckle. Fix the probe of the dial indicator on the position 10mm inward from the edge of the front brake disc.

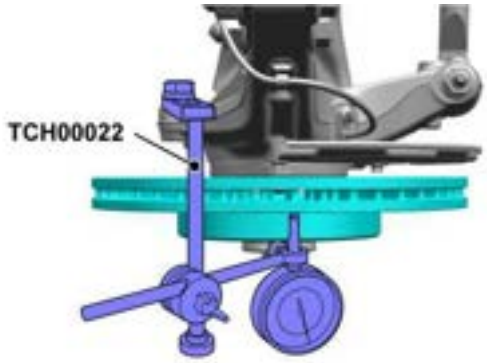

S2414898

7. Reset the dial indicator, turn the brake disc for a full circle and measure the front brake disc runout.
8. If the front brake disc runout exceeds the specified value (see brake parameters for details):
   a. Remove the wheel bolts.
   b. Remove 1 countersunk head screw fixing the front brake disc to the front wheel hub bearing assembly, and remove the front brake disc.
   c. Ensure the junction surface between the front brake disc and the front wheel hub bearing assembly is clean.
   d. Locate the front brake disc to the front wheel hub bearing assembly, fit 1 countersunk head screw, and tighten it to **7-10Nm** .
   e. Check the runout of the brake disc again.
   f. If the runout still exceeds the specified value, replace the front brake disc or the front wheel hub bearing assembly.
9. Remove the dial indicator and TCH00022 .
10. Remove the wheel bolts.
11. If the front brake disc has been replaced, use the tool to press the front brake caliper piston backward to a proper position.
12. Locate the front brake caliper assembly to the front steering knuckle, fit 2 new bolts and tighten them to **190-210Nm** .
13. Fit the front wheels.

Wheels Refit

14. Depress the brake pedal several times to adjust the front brake system friction plate.

Front Brake Disc Guard Plate

Remove

1. Remove the front brake disc.

☞**Front Brake Disc Remove**

2. Remove 3 bolts fixing the front brake disc guard plate to the steering knuckle.

3. Remove the front brake disc guard plate.

Refit

1. Locate the front brake disc guard plate to the steering knuckle, fit 3 bolts and tighten them to **7-10Nm** .
2. Fit the front brake disc.

☞**Front Brake Disc Refit**

Rear Disc Brake Friction Plate Assembly

Remove

1. Use a scan tool to release the electronic parking brake.
2. Disconnect the negative battery cable.
3. Remove the rear wheels.

☞ Wheels Remove

4. Disconnect the harness connector of the parking motor.
5. Remove the rear brake caliper guide pin trim cover and rear brake caliper stop spring, and remove 2 bolts fixing the rear brake caliper housing assembly to the rear brake caliper bracket assembly.

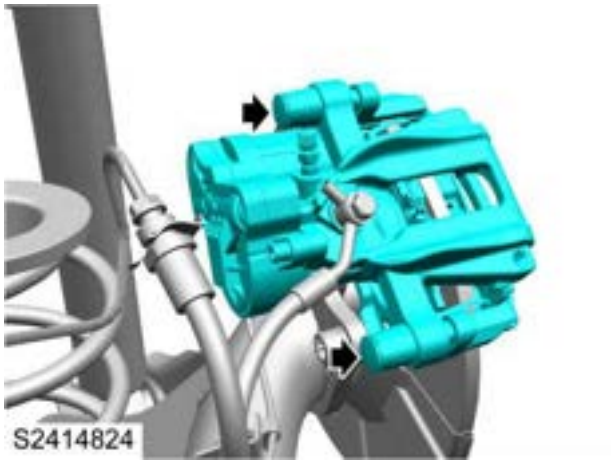

6. Remove the rear brake caliper housing assembly and fix it in a proper position.

Caution：Do not hang the brake caliper on the brake hose.

7. Remove the rear brake friction plate from the rear brake caliper bracket assembly.

Refit

1. Clean the rear brake disc, the rear brake caliper housing assembly and the rear brake caliper bracket assembly, and check the rear brake caliper and seals for damage.
2. Fit the rear brake friction plate to the rear brake caliper bracket assembly.
3. Locate the rear brake caliper housing assembly to the rear brake caliper bracket assembly, fit 2 bolts and tighten them to **25-30Nm** .
4. Fit the rear brake caliper guide pin trim cover and rear brake caliper stop spring, and connect the harness connector of the parking motor.
5. Connect the negative battery cable.
6. Use a scan tool to adjust the EPB system.
7. Depress the brake pedal several times to position the rear brake friction plate.

Tip：Pedal travel may be longer than normal during first brake application.

8. Fit the rear wheels.

☞ Wheels Refit

Rear Disc Brake Caliper Housing Assembly

Remove

1. Use a scan tool to perform an electric parking brake release.
2. Disconnect the negative battery cable.
3. Remove the rear wheels.

☞ **Wheels Remove**

4. Remove the parking motor assembly.

☞ **Parking Motor Assembly Remove**

5. Put the cloth at the rear brake hose connector to absorb the spilled brake fluid.

Caution : Before disconnecting or removing the brake lines, ensure the middle area around the lines and joints are clean. Plug the open joints to prevent the entry of pollutants.

6. Remove 1 bolt and 2 gaskets fixing the rear brake hose to the rear brake caliper housing assembly, and discard the gaskets.

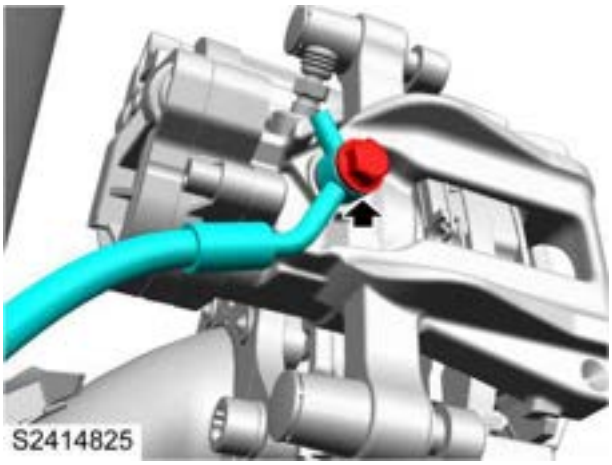

7. Remove the rear brake caliper guide pin trim cover and rear brake caliper stop spring.
8. Remove the rear brake caliper guide pin trim cover, remove 2 bolts fixing the rear brake caliper housing assembly to the rear brake caliper bracket assembly, and remove the rear brake caliper stop spring.

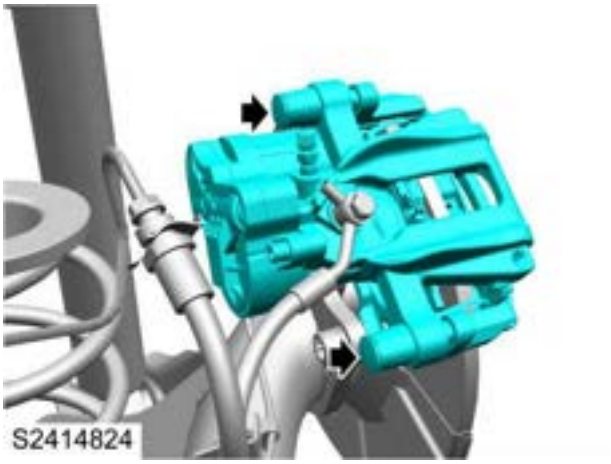

9. Remove the rear brake caliper housing assembly.

Refit

1. Locate the rear brake caliper housing assembly to the rear brake caliper bracket, fit 2 bolts and tighten them to **25-30Nm** .
2. Fit the rear brake caliper guide pin trim cover and the rear brake caliper stop spring.
3. Fit 1 bolt and 2 new gaskets fixing the rear brake hose to the rear brake caliper housing assembly, and tighten them to **28-32Nm** .
4. Fit the parking motor assembly.

☞ **Parking Motor Assembly Refit**

5. Fit the rear wheels.

☞ **Wheels Refit**

6. Connect the negative battery cable.
7. Use the scan tool to adjust the electronic parking brake system.
8. Drain the brake system.

☞ **Brake System Drain**

Rear Disc Brake Caliper Bracket Assembly

Remove

1. Use a scan tool to release the electronic parking.
2. Disconnect the negative battery cable.
3. Remove the rear wheels.

☞ Wheels Remove

4. Disconnect the harness connector of the parking motor.
5. Remove the rear brake caliper guide pin trim cover and rear brake caliper stop spring, remove and discard 2 bolts fixing the rear brake caliper housing to the rear brake caliper bracket.

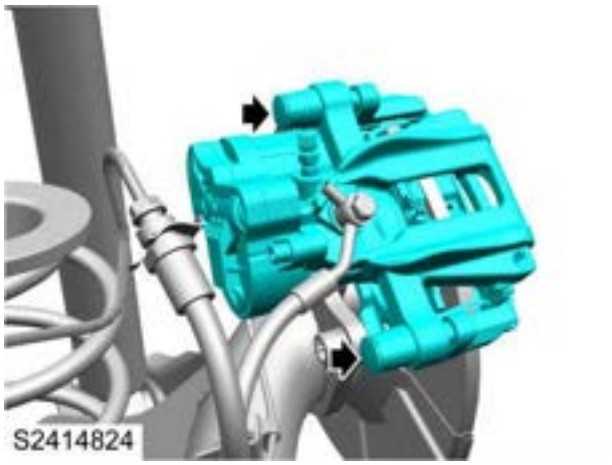

6. Pry off the rear brake caliper housing assembly with a tool, and fix the rear brake caliper housing assembly to an appropriate position.

Caution：Don't tie brake caliper on brake hose.

7. Remove the rear brake system friction plate from the rear brake caliper bracket assembly.
8. Remove and discard 2 bolts fixing the rear brake caliper bracket assembly to the rear wheel bracket.

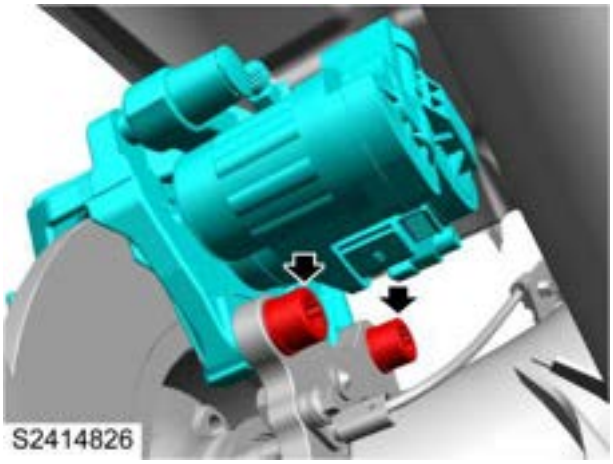

9. Remove the rear brake caliper bracket assembly.

Refit

1. Clean the rear brake disc, the rear brake caliper housing assembly and the rear brake caliper bracket assembly.
2. Locate the rear brake caliper bracket assembly to the rear wheel bracket, fit 2 new bolts and tighten them to **（81-99）Nm+（85-95）°**.
3. Locate the rear brake friction plate to the rear brake caliper bracket assembly.
4. Fix the rear brake caliper housing assembly to the rear brake caliper bracket assembly, fit 2 bolts and tighten them to **25-30Nm** .
5. Fit the rear brake caliper guide pin trim cover and rear brake caliper stop spring, and connect the harness connector of the parking motor.
6. Fit the rear wheels.

☞ Wheels Refit

7. Connect the negative battery cable.
8. Use the scan tool to adjust the electronic parking brake system.
9. Depress the brake pedal several times to position the rear brake friction plate.

Tip：Pedal travel may be longer than normal during first brake application.

Parking Motor Assembly

Remove

1. Use a scan tool to release the electronic parking brake.
2. Disconnect the negative battery cable.
3. Remove the rear wheels.

☞ Wheels Remove

4. Disconnect the parking motor harness connector (1).
5. Remove 2 bolts (2) fixing the parking motor to the rear brake caliper assembly.

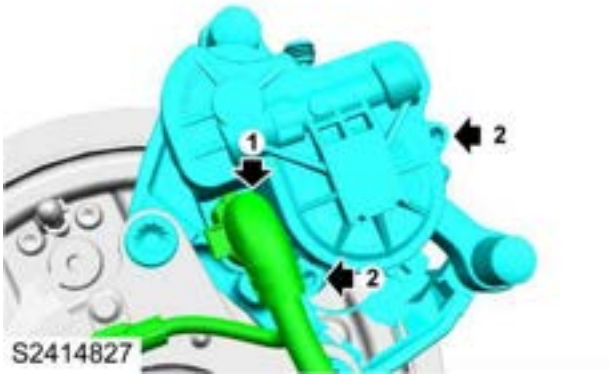

6. Remove the parking motor.

Refit

1. Locate the parking motor to the rear brake caliper assembly, fit 2 bolts and tighten them to **8-9Nm** .
2. Connect the harness connector of the parking motor.
3. Fit the rear wheels.

☞ Wheels Refit

4. Connect the negative battery cable.
5. Perform the assembly initialisation for the parking motor.

☞

Rear Brake Disc

Remove

1. Remove the rear brake caliper bracket assembly.

☞ **Rear Brake Caliper Bracket Assembly Remove**

2. Remove 1 countersunk head screw fixing the rear brake disc to the rear wheel hub bearing assembly.

3. Remove the rear brake disc.

Refit

1. Ensure the junction surface between the rear brake disc and the rear wheel hub bearing assembly is clean.
2. Locate the rear brake disc to the rear wheel hub bearing assembly, fit 1 countersunk head screw, and tighten it to **7-10Nm** .
3. Check the mounting surface and hole of the wheel bracket and rear brake caliper assembly, remove the foreign material or oil stain and ensure the mounting surface and hole are clean.
4. Fit the rear brake caliper bracket assembly.

☞ **Rear Disc Brake Caliper Bracket Assembly Refit**

Check

1. Use a scan tool to perform an electric parking brake release.
2. Disconnect the negative battery cable.
3. Remove the rear wheels.

☞ **Wheels Remove**

4. Disconnect the harness connector of the parking motor.
5. Remove and discard 2 bolts fixing the rear brake caliper assembly to the rear wheel bracket.

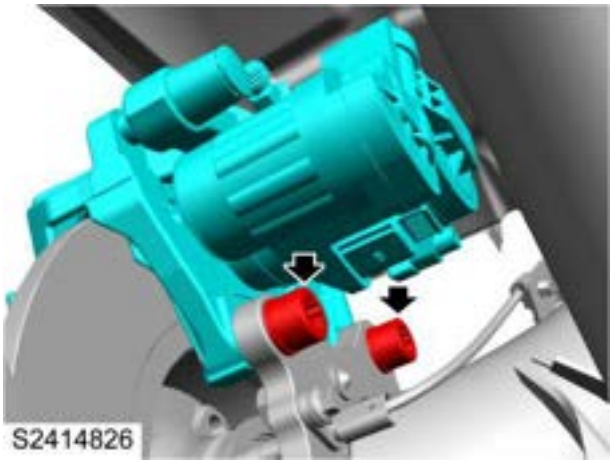

6. Carefully pry off the rear brake caliper assembly with a tool, and fix it in a proper position.

Caution：Do not hang the brake caliper on the brake hose.

7. Measure the thickness of the rear brake disc at four equal division points on the surface of rear brake disc with a differential gauge/micrometre, and ensure the measurement points are located 10mm inward from the edge of the rear brake disc. If the thickness of the rear brake disc is lower than the specified minimum value (see service brake parameters for details), replace the rear brake disc.

Caution：Brake discs must be replaced in pairs, unless the disc is just replaced with a new one with less than 1500 km.

8. Fit 5 wheel bolts, and tighten them to **120-130Nm** .
9. Fit the dial indicator to TCH00022 , use the rear brake caliper assembly to assemble bolt holes, fix the TCH00022 to the inner side of the wheel bracket. Fix the probe of the dial indicator on the position 10mm inward from the edge of the rear brake disc.

S2414899

10. Reset the dial indicator, turn the brake disc for a full circle and measure the rear brake disc runout.
11. If the rear brake disc runout exceeds the specified value (see service brake parameters for details):
    a. Remove the wheel bolts.

b. Remove 1 countersunk head screw fixing the rear brake disc to the rear wheel hub bearing assembly, and remove the rear brake disc.

c. Ensure the junction surface between the rear brake disc and the rear wheel hub bearing assembly is clean.

d. Locate the rear brake disc to the rear wheel hub bearing assembly, fit 1 countersunk head screw, and tighten it to **7-10Nm** .

e. Check the runout of the rear brake disc again.

f. If the runout still exceeds the specified value, replace the rear brake disc or the rear wheel hub bearing assembly.

12. Remove the dial indicator and TCH00022 from the inner side of the wheel bracket.

13. Remove the wheel bolts.

14. Locate the rear brake caliper assembly to the rear wheel bracket, fit 2 new bolts and tighten them to **90Nm+90°** .

15. Connect the harness connector of the parking motor.

16. Connect the negative battery cable.

17. Use the scan tool to adjust the electronic parking brake system.

18. Depress the brake pedal several times to adjust the rear brake system friction plate.

19. Fit the rear wheels.

☞ **Wheels Refit**

Rear Brake Disc Guard Plate

Remove

1. Remove the rear wheel hub bearing assembly.

☞ Rear Wheel Hub Bearing Assembly Remove

2. Remove and discard 3 bolts fixing the rear brake disc guard plate to the rear wheel bracket.

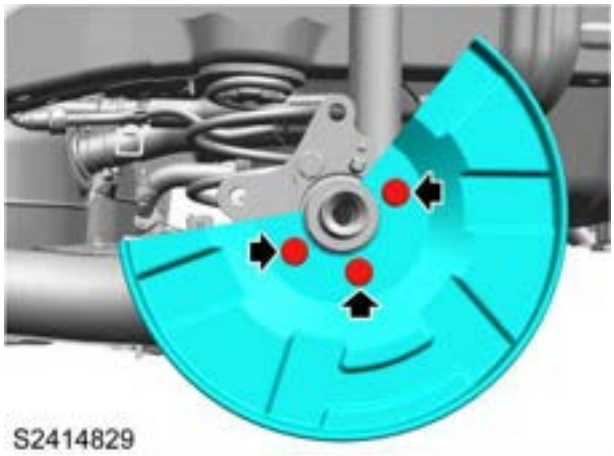

3. Remove the rear brake disc guard plate.

Refit

1. Ensure the junction surface of the rear brake disc guard plate and the rear wheel bracket is clean.
2. Locate the rear brake disc guard plate to the rear wheel bracket, fit 3 bolts and tighten them to **(27-33) Nm+ (85-95) °** .
3. Fit the rear wheel hub bearing assembly.

☞ Rear Wheel Hub Bearing Assembly Refit

Master Cylinder Far-end Reservoir Assembly

Remove - Far-end

1. Drain the brake fluid from the master cylinder far-end reservoir.
2. Put the cloth under the brake master cylinder far-end reservoir assembly to absorb the spilled fluid.

Caution：Brake fluid will damage the paint. If fluid spills, immediately remove it and clean this area with water.

3. Loosen the clamp, and disconnect the reservoir connecting oil pipe from the far-end reservoir.

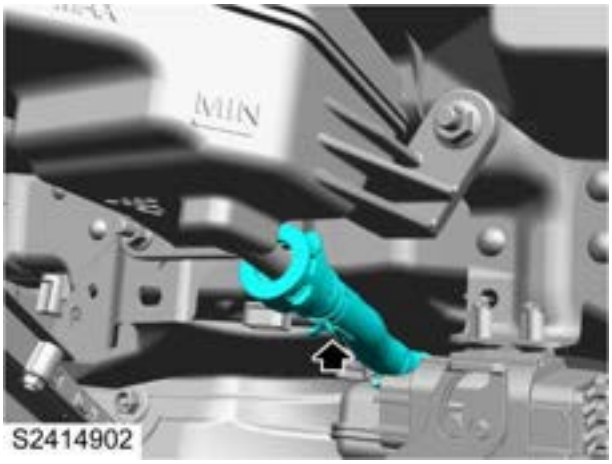

4. Remove 2 nuts (2) fixing the master cylinder far-end reservoir to the body.

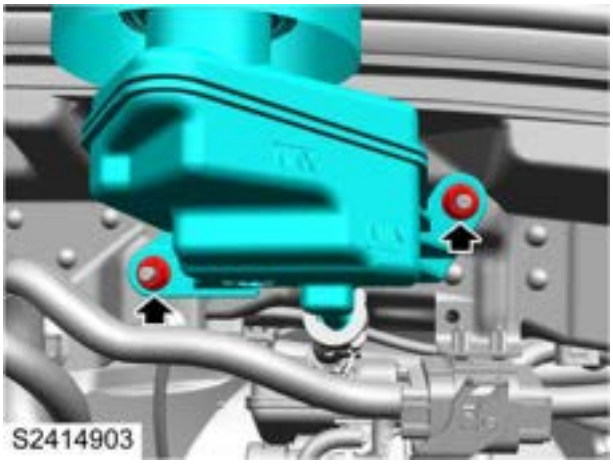

5. Remove the master cylinder far-end reservoir assembly.

Refit - Far End

1. Locate the master cylinder far-end reservoir to the body.
2. Connect the reservoir connecting oil pipe to the master cylinder far-end reservoir, and secure it with clamps.
3. Fit 2 nuts fixing the master cylinder far-end reservoir to the body, tighten them to **7-10Nm** , and fit the harness retaining clips.
4. Refill the brake fluid.
5. Drain the brake system.

☞ **Brake System Drain**

Master Cylinder Near-end Reservoir Assembly Remove - Near-end

1. Remove the master cylinder far-end reservoir assembly.

☞Master Cylinder Far-end Reservoir Assembly Remove - Far-end Remove - Near-end

2. Remove the reservoir connecting oil pipe.

☞Reservoir Connecting Oil Pipe Remove

3. Put the cloth under the brake master cylinder near-end reservoir assembly to absorb the spilled fluid.

Caution：Brake fluid will damage the paint. If fluid spills, immediately remove it and clean this area with water.

4. Disconnect the harness connector (1) of the brake fluid level sensor.
5. Remove 1 bolt (2) fixing the master cylinder near-end reservoir assembly to the brake master cylinder.

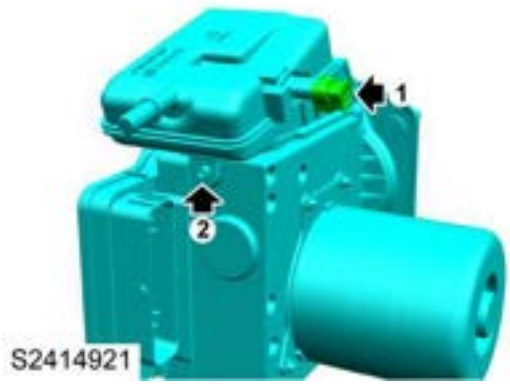

6. Remove the master cylinder near-end reservoir assembly.

Refit - Near End

1. Locate the master cylinder near-end reservoir assembly to the brake master cylinder, fit 1 bolt, and tighten it to **3.6-4.2Nm** .
2. Connect the harness connector of the brake fluid level sensor.
3. Recycle the rags used to absorb spilled fluid.
4. Fit the reservoir connecting oil pipe.

☞Reservoir Connecting Oil Pipe Refit

5. Fit the master cylinder far-end reservoir assembly.

☞Master Cylinder Far-end Reservoir Assembly Refit - Far End Refit - Near End

Reservoir Connecting Oil Pipe

Remove

1. Drain the brake fluid.
2. Put the cloth under the reservoir connecting oil pipe to absorb the spilled fluid.

Caution：Brake fluid will damage the paint. If fluid spills, immediately remove it and clean this area with water.

3. Loosen the clamp, and disconnect the reservoir connecting oil pipe from the master cylinder far-end reservoir assembly.
4. Loosen the clamp, and disconnect the reservoir connecting oil pipe from the master cylinder near-end reservoir.

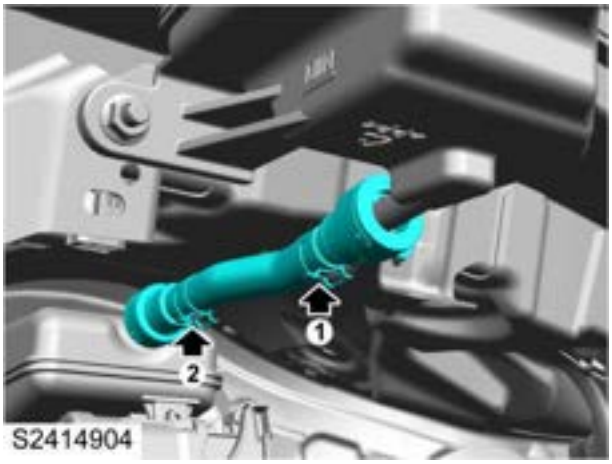

5. Remove the reservoir connecting oil pipe.

Refit

1. Connect the reservoir connecting oil pipe to the master cylinder near-end reservoir, and secure it with clamps.
2. Connect the reservoir connecting oil pipe to the master cylinder far-end reservoir assembly, and secure it with clamps.
3. Recycle the rags used to absorb spilled fluid.
4. Refill the brake fluid.
5. Drain the brake system.

☞Brake System Drain

Brake Lamp Signal Sensor

Remove

1. Remove the driver side lower trim panel assembly.

Driver Side Lower Trim Panel Assembly Remove

2. Disconnect the harness connector (1) of the brake lamp signal sensor.
3. Remove the brake lamp signal sensor (2).

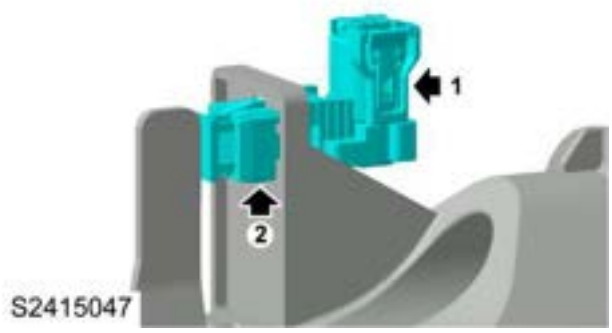

Refit

1. Locate the brake lamp signal sensor to the mounting position.
2. Connect the harness connector of the brake lamp signal sensor.
3. Fit the driver side lower trim panel assembly.

Driver Side Lower Trim Panel Assembly Refit

Brake Modulator Unit Assembly-IBS

Remove

1. Remove the reservoir connecting oil pipe.

☞**Reservoir Connecting Oil Pipe Remove**

2. Disconnect the harness connector (1) of the brake modulator reservoir level sensor.
3. Disconnect the harness connector (2) of the brake modulator unit assembly.

S2414907

4. Disconnect the brake modulator unit assembly from the brake pipe in the sequence (1, 2, 3, 4).

Caution : Before disconnecting or removing the brake lines, ensure the middle area around the lines and joints are clean. Plug the open joints to prevent the entry of pollutants.

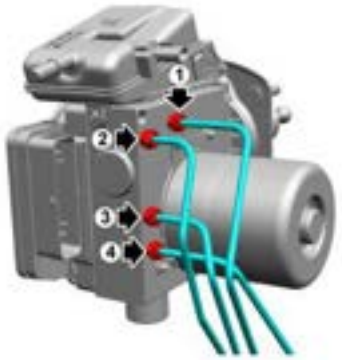

S2414905

5. Plug the brake pipe connector to prevent loss and contamination of brake fluid.
6. Remove 4 nuts fixing the brake modulator unit assembly to the body.

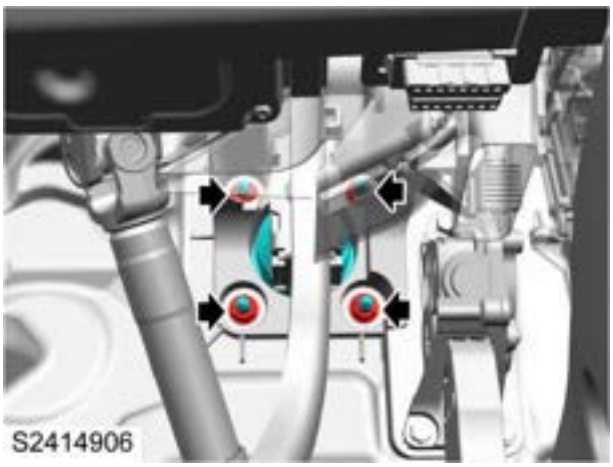

S2414906

7. Remove and discard the booster connector fixing the brake modulator unit assembly to the brake pedal.
8. Remove the brake modulator unit assembly.

Refit

1. Fix the new brake modulator unit assembly to the brake pedal, and connect the brake booster push rod.
2. Locate the brake modulator unit assembly to the body by aligning with the fixing holes of the brake pedal, fit 4 nuts and tighten them to **19-25Nm** .
3. Connect 4 front brake pipes to the brake modulator unit according to the mounting marks, and ensure that the pipes are connected to the corresponding ports, and tighten the brake pipe connector nuts to **15-19Nm** .
4. Connect the harness connector of the brake modulator unit.
5. Connect the harness connector of the brake modulator reservoir level sensor.
6. Fit the reservoir connecting oil pipe.

☞**Reservoir Connecting Oil Pipe Refit**

7. Drain the brake system.

☞**Brake System Drain**

Front Wheel Speed Sensor Assembly

Remove

1. Disconnect the negative battery cable.
2. Remove the front wheels.

☞ Wheels Remove

3. Disconnect the harness connector of the front wheel speed sensor assembly.

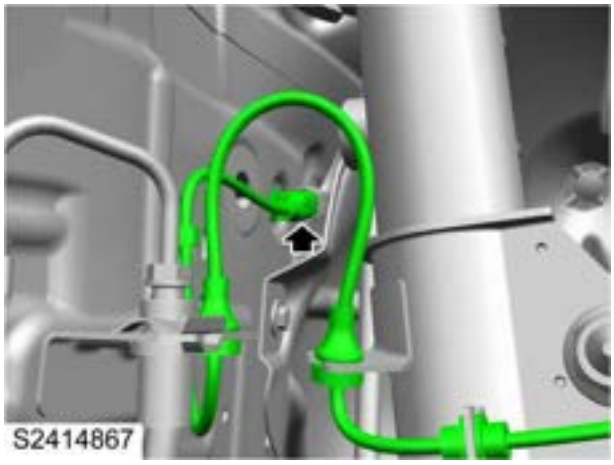

4. Disconnect the front wheel speed sensor assembly from the body, shock absorber and steering knuckle.
5. Remove 1 bolt fixing the front wheel speed sensor assembly to the steering knuckle.

6. Remove the front wheel speed sensor assembly.

Refit

1. Clean the contact surface of the front wheel speed sensor assembly and the steering knuckle.
2. Locate the front wheel speed sensor assembly to the steering knuckle, fit 1 bolt and tighten it to **7-10Nm** .
3. Fit the front wheel speed sensor assembly to the corresponding clip, and ensure that the mounting orientation is correct.
4. Connect the harness connector of front wheel speed sensor assembly, and press-fit the harness clip to the body.
5. Fit the front wheels.

☞ Wheels Refit

6. Connect the negative battery cable.

Rear Wheel Speed Sensor Assembly

Remove

1. Disconnect the negative battery cable.
2. Remove the rear wheel speed sensor assembly - models with mechanical parking brake.
   a. Disconnect the harness connector of the rear wheel speed sensor assembly.

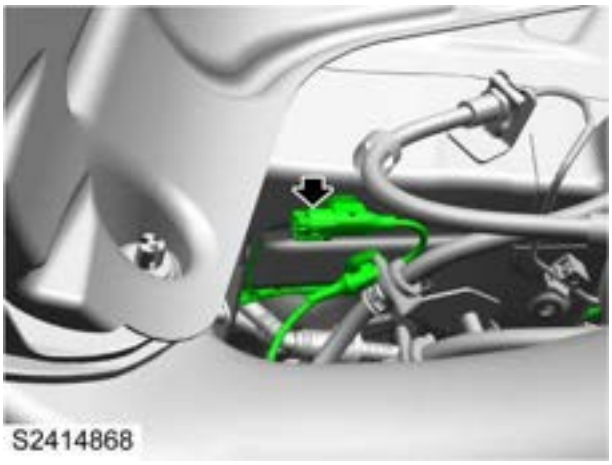

   b. Disconnect the clips connecting the rear wheel speed sensor assembly to the body and torsion beam.
   c. Remove 1 bolt fixing the rear wheel speed sensor assembly to the torsion beam.

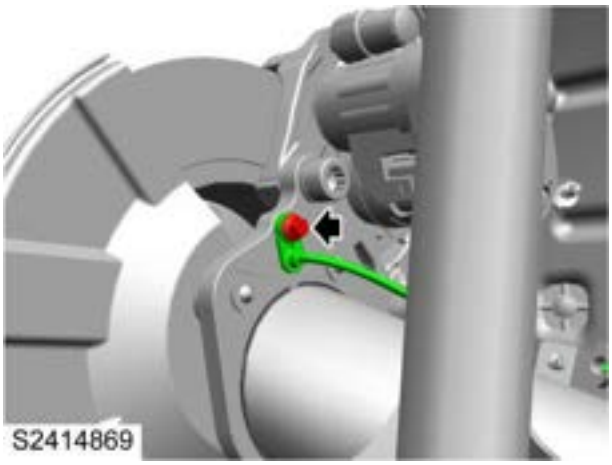

   d. Remove the rear wheel speed sensor.
3. Remove the rear wheel speed sensor assembly - models with electronic parking brake.
   a. Disconnect the harness connector (1) of the rear wheel speed sensor assembly.
   b. Remove 1 bolt (2) fixing the rear wheel speed sensor assembly to the torsion beam.

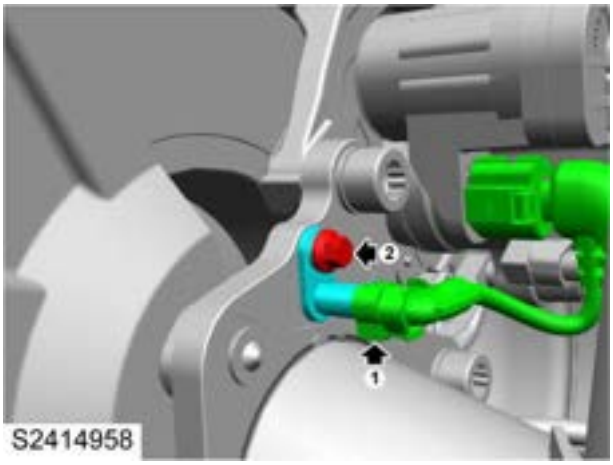

   c. Remove the rear wheel speed sensor.

Refit

1. Clean the contact surface of the rear wheel speed sensor assembly and the torsion beam.
2. Fit the rear wheel speed sensor - models with electronic parking brake.
   a. Locate the rear wheel speed sensor assembly to the mounting position on the torsion beam, fit 1 bolt and tighten it to **7-10Nm** .
   b. Connect the harness connector of the rear wheel speed sensor assembly.
3. Fit the rear wheel speed sensor - models with mechanical parking brake.
   a. Locate the rear wheel speed sensor assembly to the mounting position on the torsion beam, fit 1 bolt and tighten it to **7-10Nm** .
   b. Fit the rear wheel speed sensor assembly to the corresponding clip, and ensure that the mounting orientation is correct.
   c. Connect the harness connector of rear wheel speed sensor assembly, and press-fit the harness clip to the body.
4. Connect the negative battery cable.

Brake Pedal Assembly

Remove

1. Remove the driver side lower trim panel assembly.

Driver Side Lower Trim Panel Assembly Remove

2. Remove the accelerator pedal assembly.

Accelerator Pedal Assembly Remove

3. Remove the brake lamp signal sensor.

Brake Lamp Signal Sensor Remove

4. Remove 5 nuts (1) fixing the brake pedal assembly to the body dash panel.
5. Disconnect and discard the connector (2) connecting the brake pedal push rod to the brake booster.

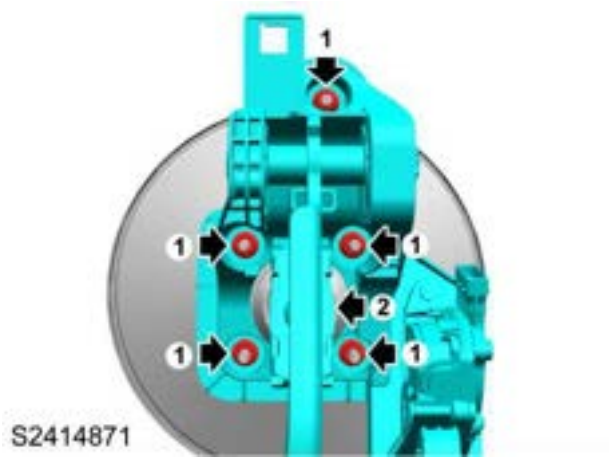

6. Remove the brake pedal assembly.

Refit

1. Fix the new brake pedal booster connector to the brake pedal, and connect the brake booster push rod.
2. Locate the brake pedal push rod to the body dash panel, fit 5 nuts and tighten them to **19-25Nm** .
3. Fit the brake lamp signal sensor.

Brake Lamp Signal Sensor Refit

4. Fit the accelerator pedal assembly.

Accelerator Pedal Assembly Refit

5. Fit the driver side lower trim panel assembly.

Driver Side Lower Trim Panel Assembly Refit

Accelerator Pedal Assembly

Remove

1. Disconnect the negative battery cable.
2. Disconnect the accelerator pedal harness connector (1).
3. Remove 3 bolts (2) fixing the accelerator pedal assembly to the pedal bracket.

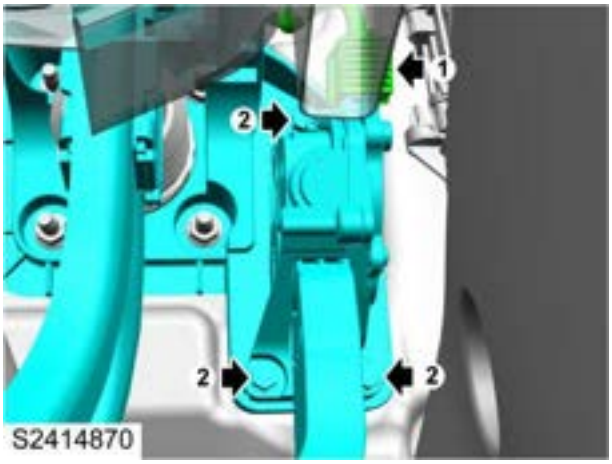

4. Remove the accelerator pedal assembly.

Refit

1. Locate the accelerator pedal assembly to the pedal bracket, fit 3 bolts and tighten them to **4-8Nm** .
2. Connect the harness connector of the accelerator pedal.
3. Connect the negative battery cable.

Remove

1. Remove the front right brake hard pipe.

   a. Remove the front right wheel.

☞Wheels Remove

   b. Remove the evaporator pipeline assembly.

☞Evaporator Pipeline Assembly Remove

   c. Put the cloth under the brake modulator to absorb the spilled oil.

   d. Remove 1 connector nut (1) fixing the front right brake hard pipe to the brake booster assembly, and disconnect the pipeline.

Caution : Before disconnecting or removing the brake lines, ensure the middle area around the lines and joints are clean. Plug the open joints to prevent the entry of pollutants.

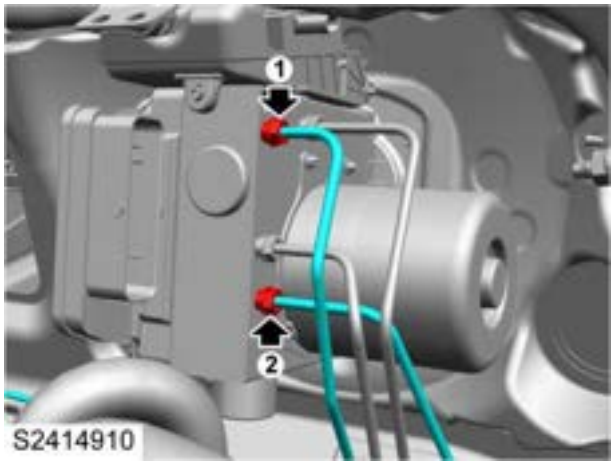

   e. Remove the connector nut fixing the front right brake hard pipe to the front brake hose, and disconnect the pipeline.

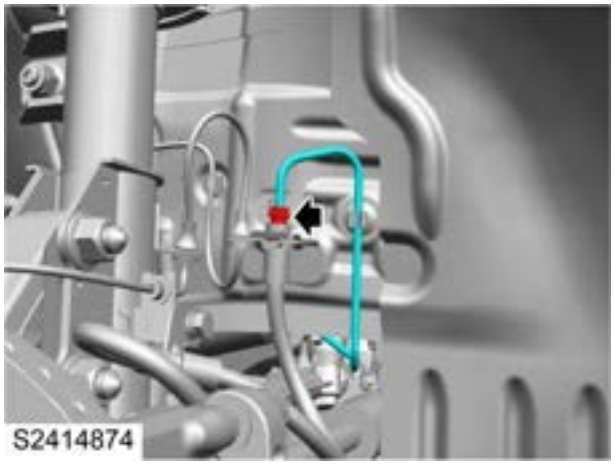

   f. Use a tool to disengage the front right brake hard pipe clamp, and remove the front right brake hard pipe.

2. Remove the front left brake hard pipe.

   a. Remove the front left wheel.

☞Wheels Remove

   b. Put the cloth under the brake modulator to absorb the spilled oil.

   c. Remove 1 connector nut (2) fixing the front left brake hard pipe to the brake booster assembly, and disconnect the pipeline.

Caution : Before disconnecting or removing the brake lines, ensure the middle area around the lines and joints are clean. Plug the open joints to prevent the entry of pollutants.

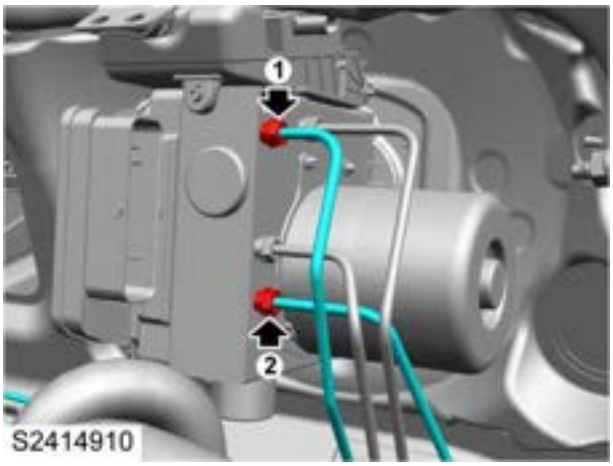

   d. Remove the connector nut fixing the front left brake hard pipe to the front brake hose, and disconnect the pipeline.

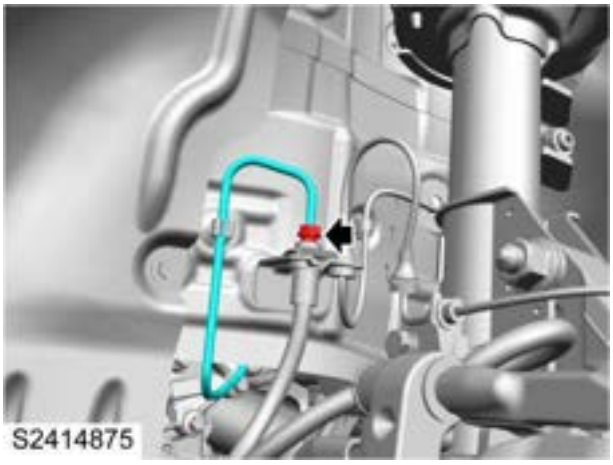

   e. Use a tool to disengage the front left brake hard pipe clamp, and remove the front left brake hard pipe.

Refit

1. Fit the front left brake pipe.

   a. Clean the brake pipe connector.

   b. Fit the front left brake pipe to the pipe clamp on the body.

   c. Locate the front left brake pipe connector to the front brake hose, and tighten the connector nut to **15-19Nm** .

d. Connect the front left brake pipe to the brake modulator, and ensure that the pipe is connected to the corresponding port, and tighten the connector nut to **15-19Nm** .

e. Take away the rag for absorbing fluid and dispose of it.

f. Fit the front left wheel.

☞**Wheels Refit**

2. Fit the front right brake pipe.

a. Clean the brake pipe connector.

b. Fit the front right brake pipe to the pipe clamp on the body.

c. Locate the front right brake pipe connector to the front brake hose, and tighten the connector nut to **15-19Nm** .

d. Connect the front right brake pipe to the brake modulator, and ensure that the pipe is connected to the corresponding port, and tighten the connector nut to **15-19Nm** .

e. Take away the rag for absorbing fluid and dispose of it.

f. Fit the evaporator pipeline assembly.

☞**Evaporator Pipeline Assembly Refit**

g. Fit the front right wheel.

☞**Wheels Refit**

3. Bleed the brake system.

☞**Brake System Drain**

Remove

1. Put the cloth under the brake modulator unit to absorb the spilled fluid.
2. Mark the positions of 2 front brake hard pipes on the brake modulator for assembly.
3. Disconnect the connecting pipe - brake modulator unit to left (1) and right (2) rear brake pipes.

Caution : Before disconnecting or removing the brake lines, ensure the middle area around the lines and joints are clean. Plug the open joints to prevent the entry of pollutants.

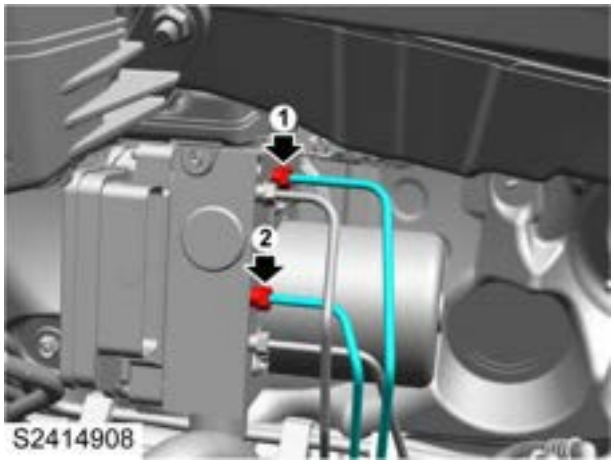

4. Remove the right middle bottom deflector.

☞ **Bottom Deflector Remove**

5. Remove the connecting nuts fixing the connecting pipe - brake modulator unit to left (1) and right (2) rear brake pipes to the rear brake pipe, and disconnect the pipeline.

Caution : Before disconnecting or removing the brake lines, ensure the middle area around the lines and joints are clean. Plug the open joints to prevent the entry of pollutants.

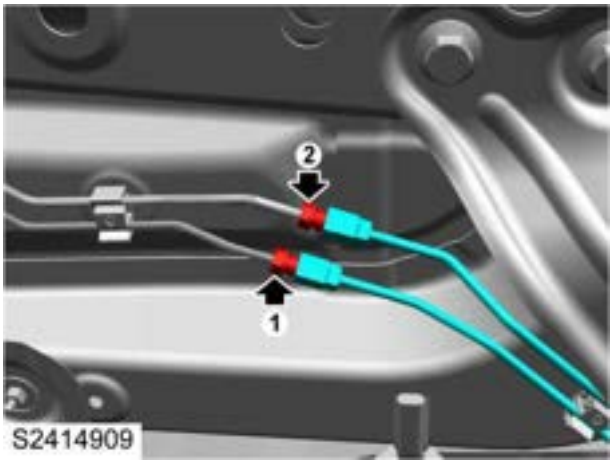

6. Disengage the pipe clamp fixing the connecting pipe - brake modulator unit to rear brake pipe to the body.
7. Pull out the connecting pipe - brake modulator to rear brake pipe.

Refit

1. Clean the brake pipe connector.
2. Fit the connecting pipe - brake modulator unit to rear brake pipe to the pipe clamp on the body and ensure that it is clamped in place.
3. Connect the connecting pipe - brake modulator to rear brake pipe to the rear brake pipe, and tighten the connector nut to **13-15Nm** .
4. Connect 2 front brake pipes to the brake modulator unit according to the assembly marks, and ensure that the pipes are connected to the corresponding ports, and tighten the brake pipe connector nuts to **15-19Nm** .
5. Fit the right middle bottom deflector.

☞ **Bottom Deflector Refit**

6. Bleed the brake system.

☞ **Brake System Drain**

Remove

1. Remove the centre right bottom deflector.

☞ **Bottom Deflector Remove**

2. Place a proper container under the vehicle to collect the spilled liquid.
3. Remove the rear left brake pipe.
   a. Remove the connecting nuts connecting the pipe - brake modulator unit to rear brake pipe to the rear left brake pipe, and disconnect the pipeline.

Caution : Before disconnecting or removing the brake lines, ensure the middle area around the lines and joints are clean. Plug the open joints to prevent the entry of pollutants.

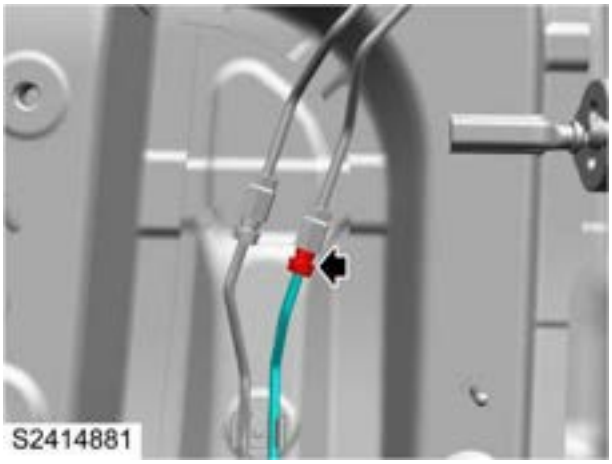

   b. Remove the connector nut fixing the rear left brake pipe to the rear left brake hose, and disconnect the pipeline.

Caution : Before disconnecting or removing the brake lines, ensure the middle area around the lines and joints are clean. Plug the open joints to prevent the entry of pollutants.

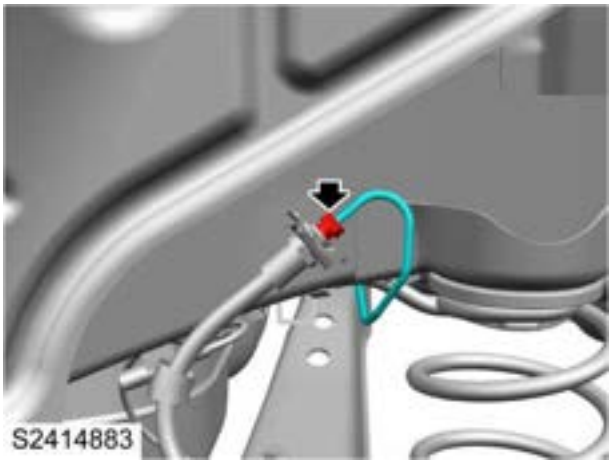

   c. Disconnect the rear left brake pipe from the pipe clamps on the body.
   d. Pull out the rear left brake hard pipe.
4. Remove the rear right brake pipe.
   a. Remove the connecting nuts connecting the pipe - brake modulator unit to rear brake pipe to the rear right brake pipe, and disconnect the pipeline.

Caution : Before disconnecting or removing the brake lines, ensure the middle area around the lines and joints are clean. Plug the open joints to prevent the entry of pollutants.

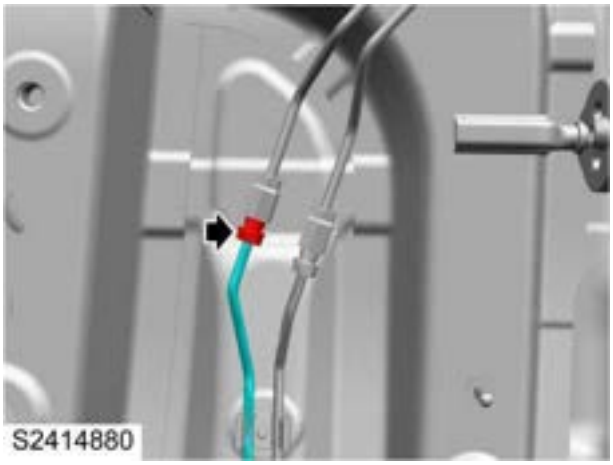

   b. Remove the connector nut fixing the rear right brake hard pipe to the rear right brake hose, and disconnect the pipeline.

Caution : Before disconnecting or removing the brake lines, ensure the middle area around the lines and joints are clean. Plug the open joints to prevent the entry of pollutants.

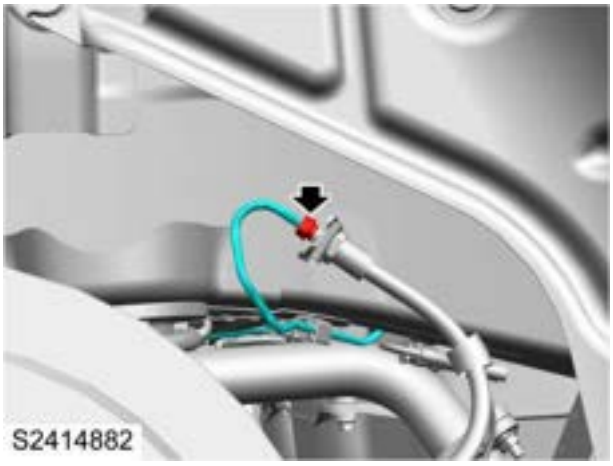

   c. Disconnect the rear right brake hard pipe from the pipe clamp on the body.
   d. Pull out the rear right brake hard pipe.

Refit

1. Clean the brake pipe connector.
2. Fit the rear right brake pipe.
   a. Locate the rear right brake pipe to the body clamp and ensure that it is clamped in place.
   b. Remove the plug, locate the rear right brake pipe connector to the rear right brake hose, and tighten the connector nut to **15-19Nm** .

c. Remove the plug, locate the rear right brake pipe connector to the connecting pipe - brake modulator unit to rear brake pipe, and tighten the connector nut to **13-15Nm** .

3. Fit the rear left brake pipe.

a. Locate the rear left brake pipe to the body clamp and ensure that it is clamped in place.

b. Remove the plug, locate the rear left brake pipe connector to the rear left brake hose, and tighten the connector nut to **15-19Nm** .

c. Remove the plug, locate the rear left brake pipe connector to the connecting pipe - brake modulator unit to rear brake pipe, and tighten the connector nut to **13-15Nm** .

4. Fit the centre right bottom deflector.

☞**Bottom Deflector Refit**

5. Bleed the brake system.

☞**Brake System Drain**

Front Brake Hose Assembly

Remove

1. Raise the vehicle to the appropriate height.
2. Place a proper container under the brake hose connector to collect the spilled liquid.
3. Remove the connector nut (1) fixing the front brake hard pipe to the front brake hose, and disconnect them.

Caution : Before disconnecting or removing the brake lines, ensure the middle area around the lines and joints are clean. Plug the open joints to prevent the entry of pollutants.

4. Remove the pins (2) fixing the front brake pipe and front brake hose to the body bracket.
5. Remove 1 bolt (3) fixing the front brake hose and bracket to the front shock absorber.

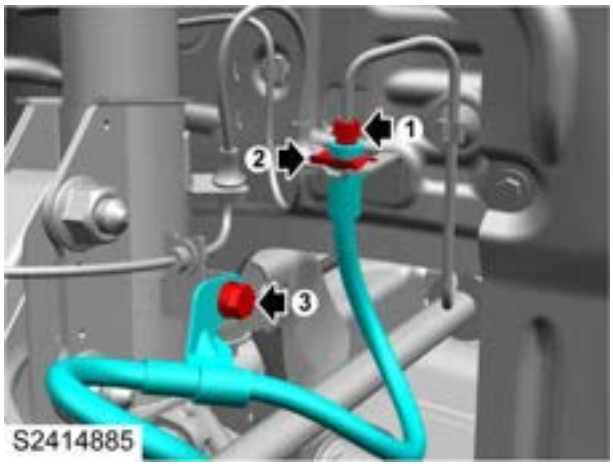

6. Remove 1 bolt (1) and 2 washers fixing the front brake hose to the front brake caliper, and discard the washers.

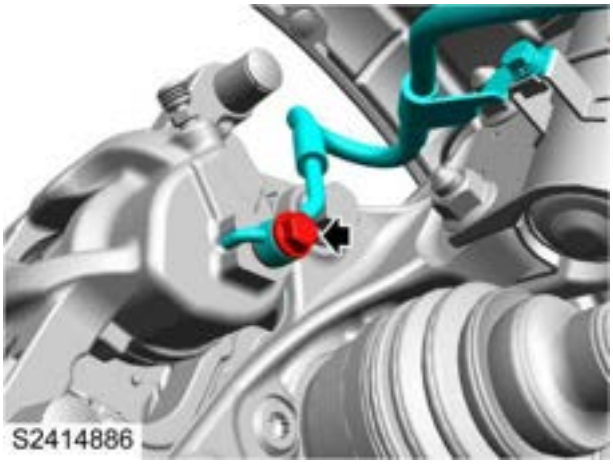

Refit

1. Clean the brake pipe connector.
2. Locate the front brake hose to the front brake caliper, fit 1 bolt and 2 new washers, and tighten the bolt to **28-32Nm** .
3. Locate the front brake hose and bracket to the front shock absorber, fit 1 bolt and tighten it to **10-15Nm** .
4. Locate the front brake pipe connector to the front brake hose, and tighten the connector nut to **15-19Nm** .
5. Locate the brake pipe and front brake hose to the body bracket, fit the pins and fasten them in place.
6. Lower the vehicle.
7. Bleed the brake system.

☞ **Brake System Drain**

Rear Brake Hose Assembly

Remove

1. Remove the rear wheels.

☞ Wheels Remove

2. Place a proper container under the brake hose connector to collect the spilled liquid.
3. Remove the rear brake hose assembly.
   a. Remove the connector nuts (1) fixing the rear brake hard pipe to the rear brake hose, and disconnect them.

Caution : Before disconnecting or removing the brake lines, ensure the middle area around the lines and joints are clean. Plug the open joints to prevent the entry of pollutants.

   b. Remove the pin (2) fixing the rear brake pipe and rear brake hose to the body.
   c. Remove 1 bolt and 2 washers (3) fixing the rear brake hose to the rear brake caliper, and discard the washers.

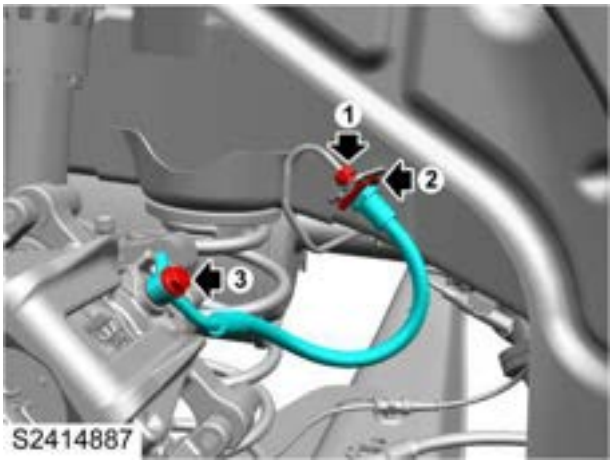

Refit

1. Clean the brake pipe connector.
2. Locate the rear brake hose to the rear brake caliper, fit 1 bolt and 2 new washers, and tighten the bolt to **28-32Nm** .
3. Locate the rear brake pipe and rear brake hose to the body bracket, fit the pins and fasten them in place.
4. Locate the rear brake pipe connector to the rear brake hose, and tighten the connector nut to **15-19Nm** .
5. Fit the rear wheels.

☞ Wheels Refit

6. Bleed the brake system.

☞ Brake System Drain

Brake System Bleeding

Drain

1. Fill the brake fluid to the MAX mark position.

Caution：During the entire bleeding process, ensure the new brake fluid level in the brake reservoir is between the MIN and MAX positions.

2. Raise the vehicle to the appropriate height.
3. Remove the bleed screw dust cover at the rear right brake caliper, fit the hose onto the bleed screw, and immerse the free end of the hose into the container with brake fluid.

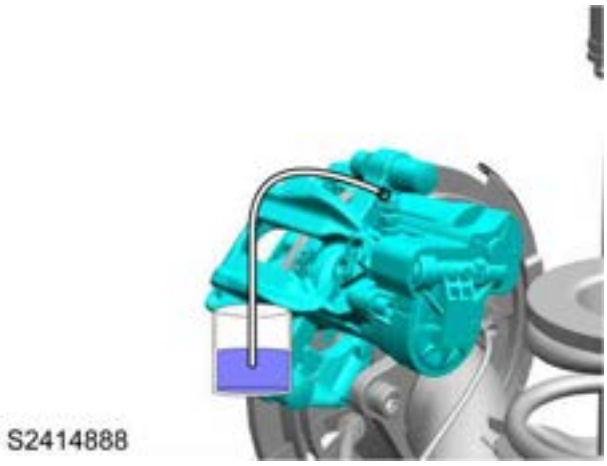

4. Depress the brake pedal for several times and apply stable pressure.
5. Loosen the bleeder screw to separate the brake fluid from air.
6. Depress the brake pedal to the maximum travel steadily, and allow it to return without any external force. Repeat the operation for several times until the air-free brake fluid flows into the container, then fix the brake pedal to the maximum travel, and tighten the rear right bleed screw to **17-18Nm** .
7. Remove the hose and fit the bleed screw dust cover.
8. Repeat the bleeding procedure in sequence of rear left - front right - front left, and the tightening torque of front brake caliper bleed screw is **16-18Nm** .

9. Lower the vehicle.
10. Fill the brake fluid to the MAX mark position.
11. Apply pressure on the brake pedal and check for leakage.
12. Perform the road test, and check the minimum travel of the brake pedal when the brake is functioning.

Wheel Drive Shaft

Specification

Torque

Description	Value
Bolt-Front lower control arm ball head to steering hub assembly	(18-22) Nm+ (85-95) °
Nut-Steering rack to steering knuckle	40-50Nm
Nut-Front anti-roll bar links to front anti-roll bar	75-90Nm
Nut-Front Drive shaft locking device	345-375Nm

Description and Operation

System Layout

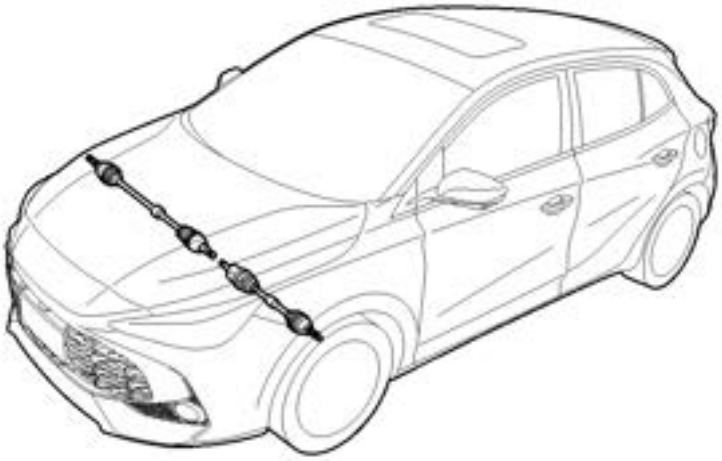

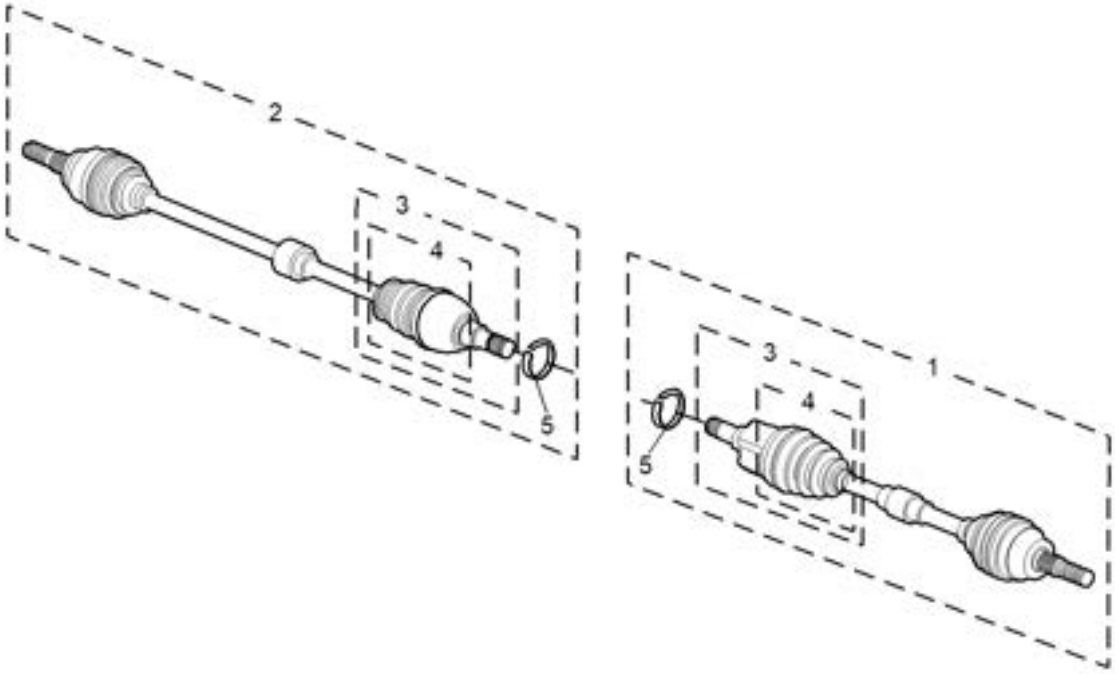

E941D077

1. Front left drive shaft assembly
2. Front right drive shaft assembly
3. Repair kit for front wheel drive shaft
4. Repair kit for front wheel drive shaft
5. Drive shaft connecting ring

Description

Drive shaft, also known as axle shaft, is a rigid shaft connecting the differential and drive wheel, and both its inner and outer ends have a universal joint assembly respectively; the universal joint assembly is filled with grease inside and provided with rubber sleeve outside.

The inner universal joint assembly is a tripod constant velocity universal joint assembly, which can slide axially. It consists of a tripod and its three pins, a sliding ball cage, a retainer and other parts. The three pins have spherical liners, which can reduce sliding resistance. The tripod universal joint assembly has an external spline shaft, which is used to connect the differential or the intermediate connecting shaft.

The outer universal joint assembly is a ball-cage constant velocity universal joint assembly. It has an external spline shaft, which connects with the wheel by coordinating with the spline in the hub bearing and fixing the locking nut. The left axle shaft assembly is connected with the differential and the left wheel; the outer end of the right axle shaft assembly is connected with the right wheel, and the inner end is directly connected with the differential.

Service Guide

Front Right Axle Shaft Assembly

Remove - Front Right

1. Remove the front right wheel.

☞ Wheels Remove

2. Remove the front bottom deflector.

☞ Bottom Deflector Remove

3. Pry up the nut locking device of the front right axle shaft, depress the brake pedal, remove and discard the axle shaft nut.

4. Remove and discard 1 nut fixing the front anti-roll bar link to the front anti-roll bar, and disconnect the connection.

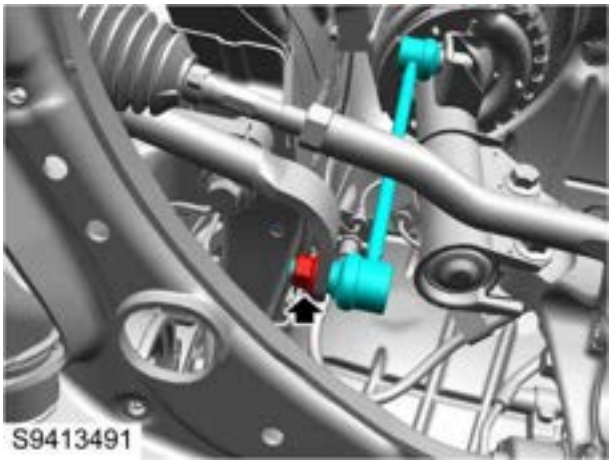

5. Remove and discard 1 nut (1) fixing the outer tie rod of steering gear to the steering knuckle, and disconnect the outer tie rod.
6. Remove 3 bolts and nuts (2) fixing the outer ball joint of front lower control arm to the front lower control arm assembly and discard them.

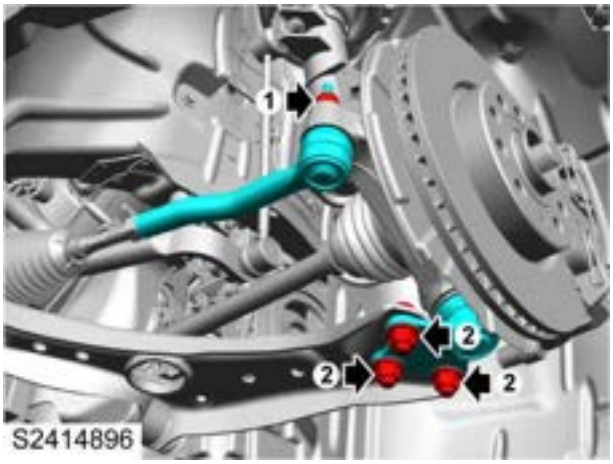

7. Pull the wheel hub outward to disconnect it from the right front axle shaft assembly.
8. Prepare a proper container to collect the spilled oil.
9. Remove the front right axle shaft - CVT.
   a. Separate the front right axle shaft from the transmission with the special tool TCH00074 .

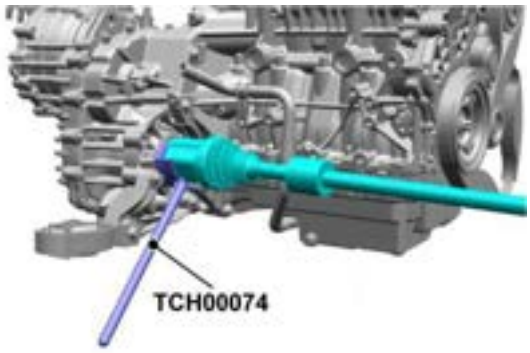

10. Remove the front right axle shaft - MT.
    a. Separate the front right axle shaft from the transmission with the special tool T30001 .

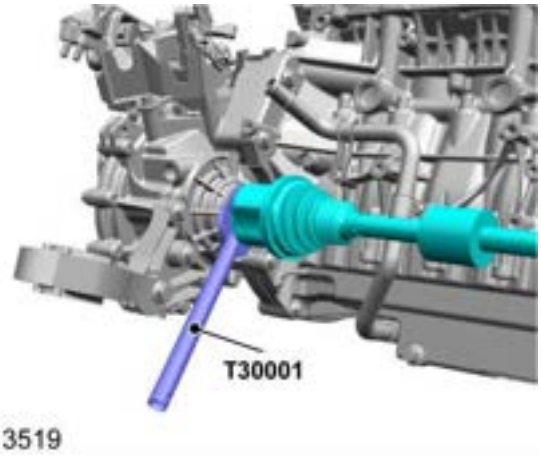

11. Remove the front right axle shaft assembly, and discard the connecting ring of front right axle shaft (circlip).

Refit - Front Right

1. Clean the junctions between the front right axle shaft

ends and the transmission as well as wheel hub.

2. Fit a new connecting ring to the front right axle shaft.
3. Fit the front right axle shaft to the transmission and ensure full engagement.
4. Pull the wheel hub outward, allow the right front axle shaft to engage the wheel hub spline.
5. Locate the outer ball joint of front lower control arm to the front lower control arm assembly, fit 3 new bolts and nuts, and tighten them to **(18-22) Nm+ (85-95) °** .
6. Locate the outer tie rod of steering gear to the steering knuckle, fit 1 new nut and tighten it to **40-50Nm** .
7. Locate the front anti-roll bar link to the front anti-roll bar, fit 1 new nut and tighten it to **75-90Nm** .
8. Fit the new axle shaft nut, firstly pre-tighten it to 200Nm, unscrew it by 100° and then tighten it to **345-375Nm** .
9. Fit the front bottom deflector.

☞**Bottom Deflector Refit**

10. Fit the front right wheel.

☞**Wheels Refit**

Front Left Axle Shaft Assembly

Remove - Front Left

1. Remove the front left wheel.

Wheels Remove

2. Remove the front bottom deflector.

Bottom Deflector Remove

3. Pry up the nut locking device of the front left axle shaft, depress the brake pedal, remove and discard the axle shaft nut.

4. Remove and discard 1 nut fixing the front anti-roll bar link to the front anti-roll bar, and disconnect the connection.

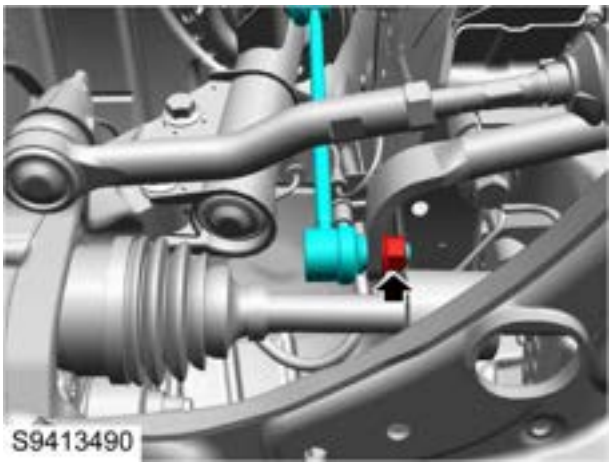

5. Remove and discard 1 nut (1) fixing the outer tie rod of steering gear to the steering knuckle, and disconnect the outer tie rod.
6. Remove 3 bolts and nuts (2) fixing the outer ball joint of front lower control arm to the front lower control arm assembly and discard them.

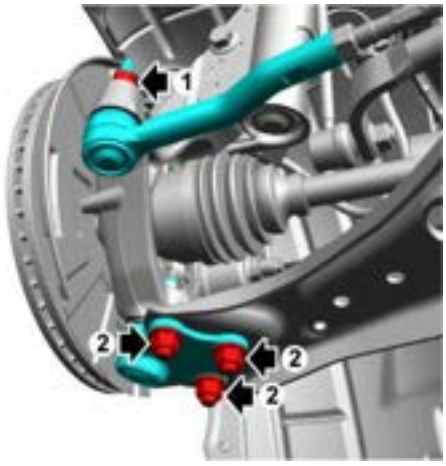

7. Pull the wheel hub outward to disconnect it from the front left axle shaft assembly.
8. Prepare a proper container to collect the spilled oil.
9. Remove the front left axle shaft - CVT.
   a. Separate the front left axle shaft from the transmission with the special tool TCH00074 .

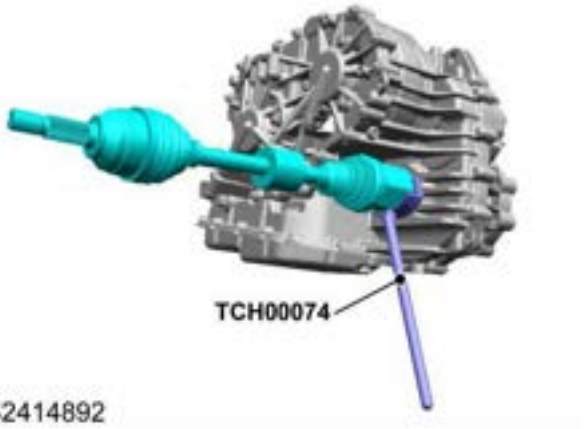

10. Remove the front left axle shaft - MT.
    a. Separate the front left axle shaft from the transmission with the special tool T30001 .

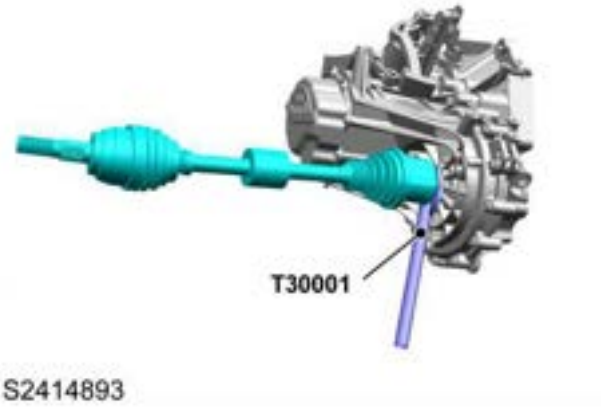

11. Remove the front left axle shaft assembly, and discard the connecting ring of front left axle shaft (circlip).

Refit - Front Left

1. Clean the junctions between the front left axle shaft

ends and the transmission as well as wheel hub.

2. Fit a new connecting ring to the front left axle shaft.
3. Fit the front left axle shaft to the transmission and ensure full engagement.
4. Pull the wheel hub outward to allow the front left axle shaft to engage with the wheel hub splines.
5. Locate the outer ball joint of front lower control arm to the front lower control arm assembly, fit 3 new bolts and nuts, and tighten them to **(18-22) Nm+ (85-95) °** .
6. Locate the outer tie rod of steering gear to the steering knuckle, fit 1 new nut and tighten it to **40-50Nm** .
7. Locate the front anti-roll bar link to the front anti-roll bar, fit 1 new nut and tighten it to **75-90Nm** .
8. Fit the new axle shaft nut, firstly pre-tighten it to 200Nm, unscrew it by 100° and then tighten it to **345-375Nm** .
9. Fit the front bottom deflector.

☞**Bottom Deflector Refit**

10. Fit the front left wheel.

☞**Wheels Refit**

Tripod Joint Assembly

Remove

1. Remove the axle shaft assembly.

☞Front Left Axle Shaft Assembly Remove - Front Right Remove - Front Left

☞Front Right Axle Shaft Assembly Remove - Front Right Remove - Front Left

2. Clamp the axle shaft to a vise.
3. Loosen and discard 2 clamps (1) and (2) of the tripod joint assembly sleeve.

4. Slide the tripod joint assembly sleeve along the axle shaft so as to see the inside of the tripod joint assembly.
5. Remove and discard the wire circlip of the tripod joint assembly with a tool.
6. Remove the axle shaft assembly.
7. Remove the tripod joint assembly from the axle shaft.

Refit

1. Clean the axle shaft and tripod joint assembly sleeve.
2. Fit the tripod joint to the axle shaft.
3. Fit the new wire circlip into the tripod joint assembly, and ensure that it is fitted in place.
4. Apply grease to the interior of the tripod joint assembly.
5. Locate the tripod joint assembly sleeve to the tripod joint, fit and fasten 2 new clamps.
6. Fit the axle shaft assembly.

☞Front Left Axle Shaft Assembly Refit - Front Right Refit - Front Left

☞Front Right Axle Shaft Assembly Refit - Front Right Refit - Front Left

Tripod Joint Assembly Sleeve

Remove

1. Remove the tripod joint assembly.

☞ **Tripod Joint Assembly Remove**

2. Remove the tripod joint sleeve from the drive shaft.

Refit

1. Fit the new tripod joint assembly sleeve to the drive shaft.
2. Fit the tripod joint assembly.

☞ **Tripod Joint Assembly Refit**

Constant Velocity Universal Joint Assembly

Remove

1. Remove the axle shaft assembly.

☞Front Left Axle Shaft Assembly Remove - Front Right Remove - Front Left

☞Front Right Axle Shaft Assembly Remove - Front Right Remove - Front Left

2. Fix the drive shaft with a bench clamp.
3. Loosen the two clamps (1) and (2) and discard them.

4. Slide the constant velocity universal joint sleeve along the drive shaft so as to see the inside of the constant velocity universal joint.
5. Clamp the wire circlip of the constant velocity joint with tools, take out the wire circlip and discard it.

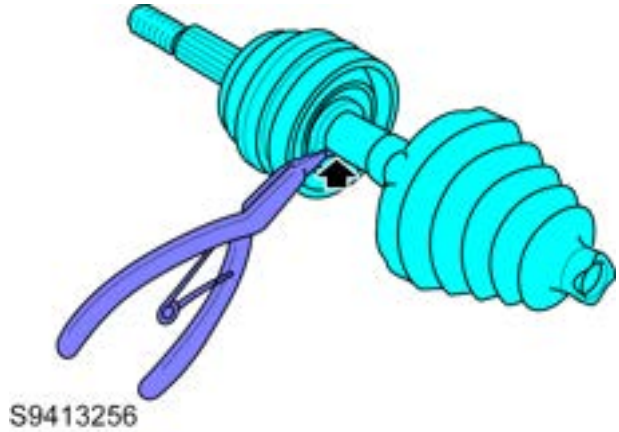

6. Remove the constant velocity joint assembly.

Refit

1. Clean the drive shaft and the sleeve.
2. Fit a new spring snap ring to the drive shaft.
3. Locate the constant velocity joint assembly to the drive shaft, press the spring snap ring in the groove with a proper tool, and fully push the constant velocity joint in the drive shaft.
4. Apply grease to the constant velocity joint assembly.
5. Locate the constant velocity joint assembly sleeve on the constant velocity joint, and fit two new clamps for fastening.
6. Fit the axle shaft assembly.

☞Front Left Axle Shaft Assembly Refit - Front Right Refit - Front Left

☞Front Right Axle Shaft Assembly Refit - Front Right Refit - Front Left

Constant velocity joint assembly sleeve

Remove

1. Remove the constant velocity joint assembly.

☞ Constant Velocity Joint Assembly Remove

2. Remove the constant velocity joint sleeve from the drive shaft.

Refit

1. Fit the constant velocity joint assembly sleeve on the drive shaft.
2. Install the constant velocity joint assembly.

☞ Constant Velocity Joint Assembly Refit

Special Tool Summary Sheet

Special Tools

Tool Number	Description	Picture
TCH00074	Drive Shaft Separator (Left)	TCH00074
T30001	Remover Drive Shaft	T30001

Instrument Panel and Centre Console

Specification

Torque

Description	Value
Bolt-passenger airbag module to fascia framework	6-8Nm
Bolt-fascia body to fascia framework	5-6.6Nm
Bolt-fascia framework to body	19-25Nm
Bolt-passenger airbag module bracket to fascia framework	5-6.6Nm
Blot-steering column to facia framework	19-25Nm
Bolt-console saucer to bracke	3-4Nm

Service Guide

Instrument Panel End Cover Plate Assembly

Remove

1. Pry off the body weatherstrip at the instrument panel end cover.
2. Pry off the clip fixing the instrument panel end cover to the instrument panel along the edge of the end cover, then remove the instrument panel end cover.

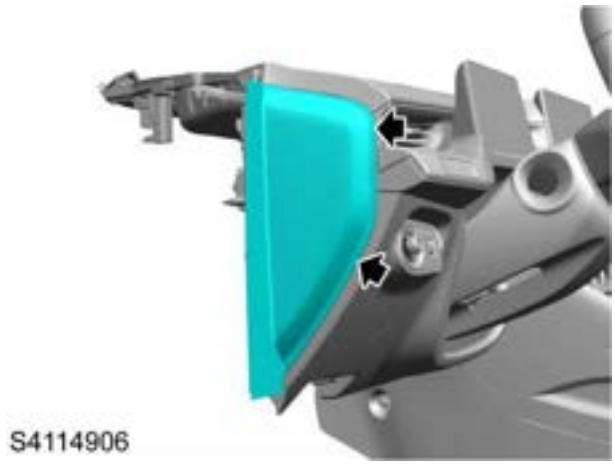

3. Repeat the above steps to remove the instrument panel end cover on the other side.

Refit

1. Align the adapter of the instrument panel end cover to the hole of the instrument panel body, push it hard to the end, and clamp it in place.
2. Restore the body weatherstrip at the instrument panel end cover.
3. Repeat the above steps to fit the instrument panel end cover on the other side.

Instrument Panel Body Assembly
Remove

1. Disconnect the negative battery cable.
2. Remove the instrument panel end cover assembly.

☞ Instrument Panel End Cover Assembly Remove

3. Remove the instrument panel lower closure panel assembly.

☞ Instrument Panel Lower Closure Panel Assembly Remove

4. Remove the driver side lower trim panel assembly.

☞ Driver Side Lower Trim Panel Assembly Remove

5. Remove the instrument panel central air outlet assembly.

☞ Instrument Panel Central Air Outlet Assembly Remove

6. Remove the instrument panel side air outlet assembly.

☞ Instrument Panel Side Air Outlet Assembly Remove

7. Remove the steering column trim cover.

☞ Steering Column Trim Cover Remove

8. Remove the glove box assembly.

☞ Glove Box Assembly Remove

9. Remove the A pillar upper trim panel.

☞ A Pillar Upper Trim Panel Remove

10. Remove the centre console assembly.

☞ Centre Console Assembly Remove

11. Remove the on-board entertainment mainframe.

☞ On-board Entertainment Mainframe Remove

12. Remove 4 screws fixing the radio module to the instrument panel beam, disconnect the harness connector, and remove the radio module.

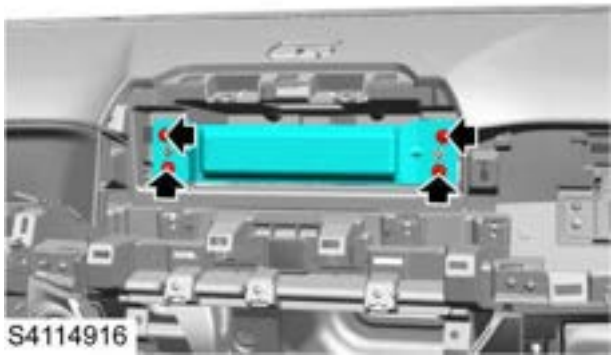

13. Remove 4 screws fixing the A/C controller module to the instrument panel beam, disconnect the harness connector, and remove the A/C controller module.

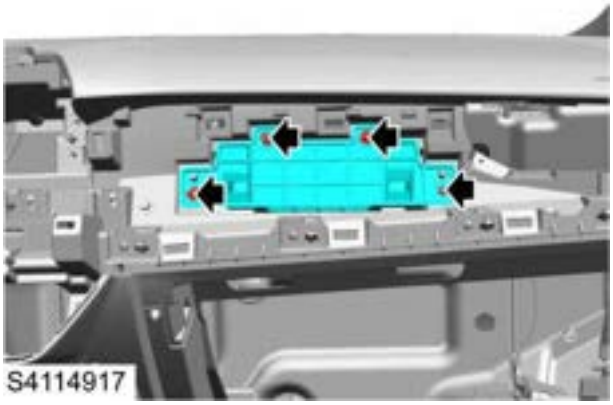

14. Remove 2 bolts fixing the instrument panel airbag bracket to the instrument panel beam, and disconnect the harness connector.

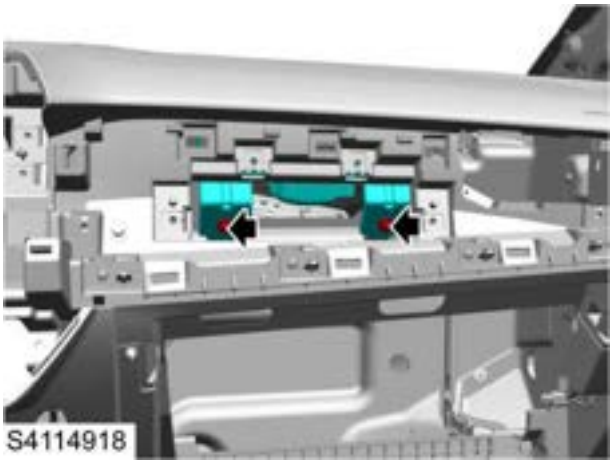

15. Remove 11 bolts fixing the instrument panel body to the instrument panel beam.

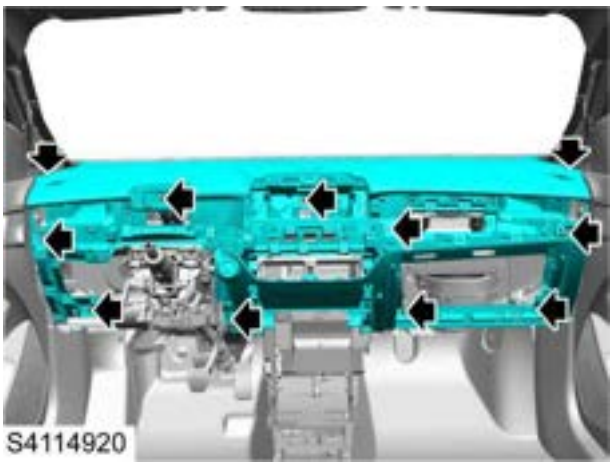

16. Pry off the harness clip fixing the instrument panel body, disconnect the harness connector, and lift the instrument panel body out of the vehicle with assistance.
17. If necessary, remove 4 bolts fixing the instrument panel airbag to the instrument panel body from the back of instrument panel body, and remove the instrument panel airbag.
18. If necessary, remove 8 screws fixing the instrument panel face air duct to the instrument panel body from

the back of instrument panel body, and remove the instrument panel face air duct.

19. If necessary, pry off the clip fixing the solar sensor to the instrument panel body from the back of instrument panel body, and remove the solar sensor.

Refit

1. If the solar sensor has been removed, first fix the solar sensor to the instrument panel body, push in the solar sensor to ensure that it is clamped in place.
2. If the instrument panel face air duct has been removed, fit 8 screws fixing the instrument panel air duct to the instrument panel body, and tighten them.
3. If the instrument panel airbag has been removed, fit 4 bolts fixing the instrument panel airbag to the instrument panel body, tighten them to **6-8Nm** , and check the torque.
4. With assistance, lift the instrument panel body into the vehicle, and connect the harness clip of the instrument panel body.
5. Fit 11 bolts fixing the instrument panel body to the instrument panel beam, tighten them to **5-6.6Nm** , and check the torque.
6. Fit 2 bolts fixing the instrument panel airbag to the instrument panel beam, tighten them to **6-8Nm** , and check the torque.
7. Connect the harness connector, fit 4 screws fixing the A/C controller module to the instrument panel assembly, and tighten them.
8. Connect the harness connector, fit 4 screws fixing the radio module to the instrument panel assembly, and tighten them (if any).
9. Fit the on-board entertainment mainframe.

☞ **On-board Entertainment Mainframe Refit**

10. Fit the centre console assembly.

☞ **Centre Console Assembly Refit**

11. Fit the A pillar upper trim panel.

☞ **A Pillar Upper Trim Panel Refit**

12. Fit the glove box assembly.

☞ **Glove Box Assembly Refit**

13. Fit the steering column upper trim cover.

☞ **Steering Column Upper Trim Cover Refit**

14. Fit the instrument panel side air outlet assembly.

☞ **Instrument Panel Side Air Outlet Assembly Refit**

15. Fit the central instrument panel air outlet assembly.

☞ **Central Instrument Panel Air Outlet Assembly Refit**

16. Fit the driver side lower trim panel assembly.

☞ **Driver Side Lower Trim Panel Assembly Refit**

17. Fit the instrument panel lower closure panel assembly.

☞ **Instrument Panel Lower Closure Panel Assembly Refit**

18. Fit the instrument panel end cover.

☞ **Instrument Panel End Cover Refit**

19. Connect the negative battery cable.

Driver Side Lower Trim Panel Assembly

Remove

1. Disconnect the negative battery cable.
2. Remove the driver side instrument panel end cover assembly.

☞ Instrument Panel End Cover Assembly Remove

3. Remove 2 screws (1) fixing the fuel filler flap release handle to the driver side knee baffle.
4. Remove 2 screws (2) fixing the bonnet release handle to the driver side knee baffle.

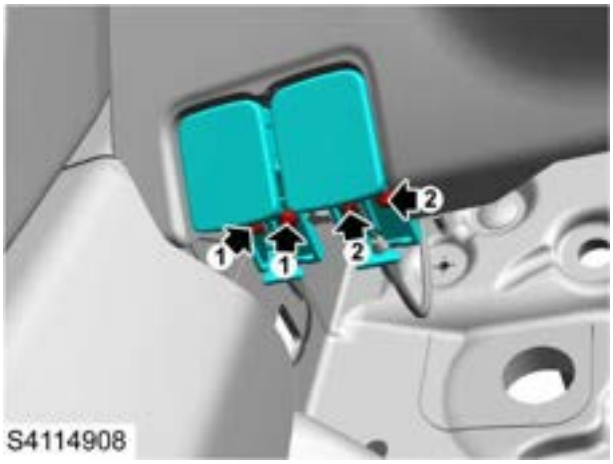

5. Remove 2 screws fixing the driver side knee baffle to the instrument panel frame.

6. Pry off the retaining clip, disconnect the harness connector and remove the driver side knee baffle.
7. If necessary, loosen the clips of the light height adjustment switch, and remove the light height adjustment switch.
8. If necessary, remove 2 screws fixing the pedestrian alert speaker to the driver side lower trim panel, and remove the pedestrian alert speaker (if equipped).

Refit

1. If removed, fit and tighten 2 screws fixing the pedestrian alert speaker to the driver side lower trim panel (if equipped).
2. If removed, fix the light control switch to the driver side lower trim panel assembly, and secure it with clips.
3. Connect the harness connector of the light control switch.
4. Align the clip of driver side lower trim panel assembly with the hole of instrument panel frame, push it hard to the end, and clamp it in place.
5. Fit 2 screws fixing the driver side lower trim panel assembly to the instrument panel frame, and tighten them.
6. Fit 2 screws fixing the bonnet release handle to the driver side lower trim panel assembly and switch, and tighten them.
7. Fit 2 screws fixing the fuel filler door release handle to the driver side lower trim panel assembly and switch, and tighten them.
8. Fit the driver side instrument panel end cover assembly.

☞ Instrument Panel End Cover Assembly Refit

9. Connect the negative battery cable.

Instrument Panel Lower Closure Panel

Remove

1. Remove 2 clips fixing the passenger side instrument panel lower closure panel assembly to the body.

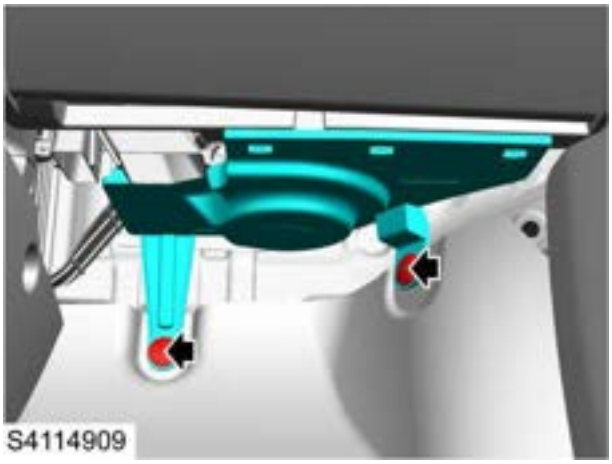

2. Remove the passenger side instrument panel lower closure panel assembly.

Refit

1. Align the clips of the passenger side instrument panel lower closure panel assembly with the holes of the glove box decorative frame, push it hard to the end, and clamp it in place.
2. Fit 2 clips fixing the passenger side instrument panel lower closure panel assembly to the body.

Glove Box Assembly

Remove

1. Open the glove box.
2. Remove 2 limit clips of the glove box to disengage the glove box from the glove box frame.

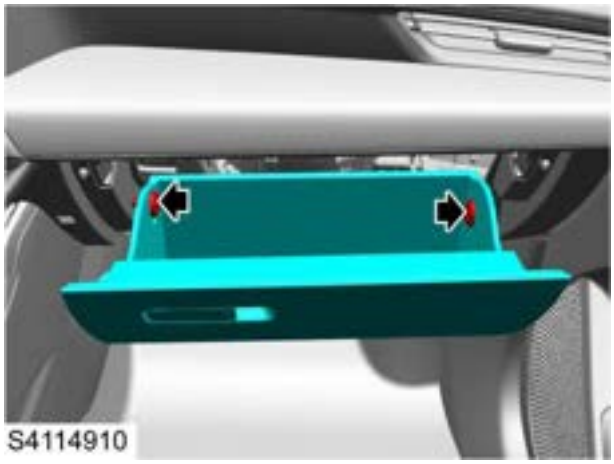

3. Remove the glove box assembly.

Refit

1. Locate the glove box to the glove box frame, and press the glove box into the glove box frame.
2. Fit 2 limit clips and rotate them to the fixed position.
3. Close the glove box.

Instrument Panel Side Air Outlet Assembly

Remove

1. Remove the driver side air outlet.

   a. Remove the instrument panel driver side trim panel assembly.

☞ **Instrument Panel Driver Side Trim Panel Assembly Remove**

   b. Remove the instrument pack.

☞ **Instrument Pack Remove**

   c. Remove 2 screws fixing the driver side air outlet trim panel to the instrument panel assembly, pry off the clip and remove the driver side air outlet trim panel.

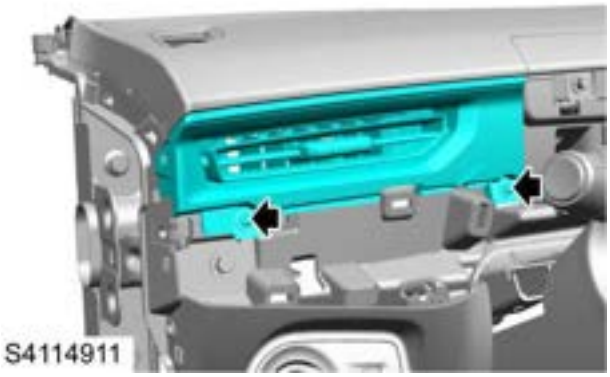

   d. Pry off the clips and remove the driver side air outlet.

2. Remove the passenger side air outlet.

   a. Remove the on-board entertainment mainframe (if equipped).

☞ **On-board Entertainment Mainframe Remove**

   b. Remove the instrument panel central storage box phone holder assembly (if equipped).

☞ **Instrument Panel Central Storage Box Phone Holder Assembly**

   c. Remove the instrument panel front passenger side trim panel assembly.

☞ **Instrument Panel Front Passenger Side Trim Panel Assembly Remove**

   d. Remove 3 screws fixing the passenger side air outlet trim panel to the instrument panel assembly, pry off the clips and remove the passenger side air outlet trim panel.

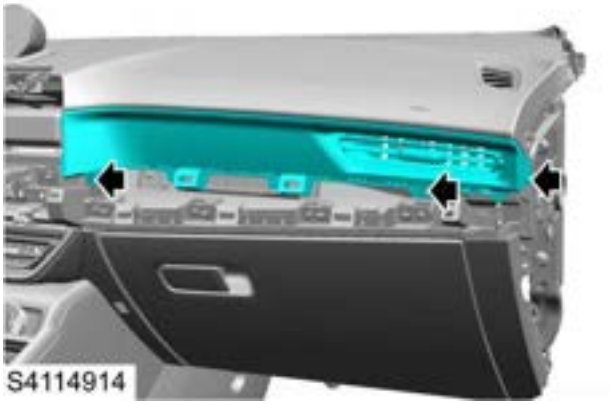

   e. Pry off the clips and remove the passenger air outlet.

Refit

1. Fit the passenger side air outlet.

   a. Locate the passenger side air outlet to the mounting position, and press the clips in place.

   b. Locate the passenger side air outlet panel to the mounting position, press the clip in place, fit and tighten 3 screws.

   c. Fit the instrument panel front passenger side trim panel assembly.

☞ **Instrument Panel Front Passenger Side Trim Panel Assembly Refit**

   d. Fit the instrument panel central air outlet storage box phone holder assembly. (if equipped)

☞ **Instrument Panel Central Air Outlet Storage Box Phone Holder Assembly**

   e. Fit the on-board entertainment mainframe (if equipped).

☞ **On-board Entertainment Mainframe Refit**

2. Fit the driver side air outlet.

   a. Locate the driver side air outlet to the mounting position, and press the clips in place.

   b. Locate the driver side air outlet panel to the mounting position, press the clip in place, fit and tighten 2 screws.

   c. Fit the instrument pack.

☞ **Instrument Pack Refit**

   d. Fit the instrument panel driver side trim panel assembly.

☞ **Instrument Panel Driver Side Trim Panel Assembly Refit**

Central Instrument Panel Air Outlet Assembly

Remove

1. Disconnect the negative battery cable.
2. Pry off the clips fixing the central air outlet to the instrument panel body along the edge of the central air outlet, disconnect the harness connector, and remove the central air outlet assembly.

3. If necessary, pry off the clips from the back of the central air outlet, and remove the hazard warning lamp switch.

Refit

1. If necessary, locate the hazard warning lamp switch to the mounting position, and press the clips in place.
2. Connect the harness connector, locate the central control panel of instrument panel to the mounting position, and press the clips in place.
3. Connect the negative battery cable.

Instrument Panel Driver Side Trim Panel Assembly

Remove

1. Disconnect the negative battery cable.
2. Remove the left instrument panel end cover.

☞ **Instrument Panel End Cover Remove**

3. Pry off the clips along the edge of the instrument pack trim frame, and remove the instrument panel instrument pack trim frame.

4. Remove 1 screw fixing the instrument panel driver side trim panel assembly to the instrument panel body.

5. Disconnect the harness connector and remove the instrument panel driver side trim panel assembly.
6. If necessary, pry off the clip and remove the door lock switch.

Refit

1. If removed, Locate the door lock switch to the mounting position, and press the clips in place.
2. Connect the harness connector, locate the instrument panel driver side trim panel assembly to the mounting position, and press the clips in place.
3. Fit and tighten 1 screw fixing the instrument panel driver side trim panel assembly to the instrument panel body.
4. Locate the instrument pack frame to the mounting position, and press the clips in place.
5. Fit the left instrument panel end cover.

☞ **Instrument Panel End Cover Refit**

6. Connect the negative battery cable.

Remove

1. Disconnect the negative battery cable.
2. Remove the right instrument panel end cover.

☞ **Instrument Panel End Cover Remove**

3. Remove the entertainment panel switch.

☞ **Entertainment Panel Switch Remove**

4. Remove the instrument panel central air outlet.

☞ **Instrument Panel Central Air Outlet Remove**

5. Pry off the clips along the edge of the instrument pack trim frame, and remove the instrument panel instrument pack trim frame.

6. Remove 5 screws fixing the instrument panel front passenger side trim panel assembly to the instrument panel body.

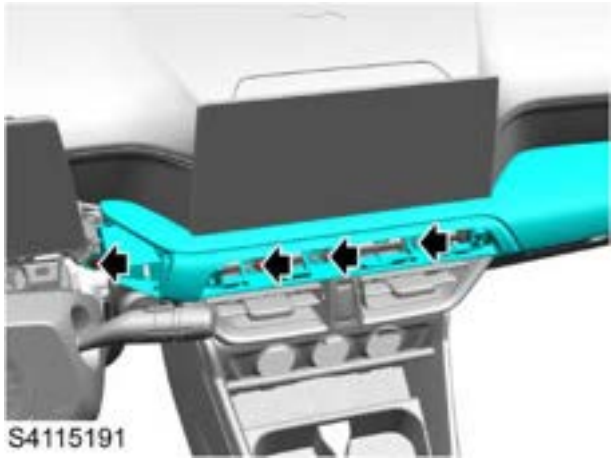

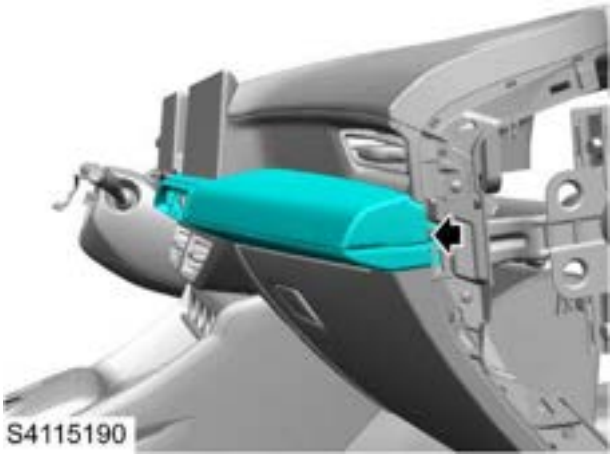

7. Pry off the clips along the edge of the instrument panel front passenger side trim panel assembly, and remove the assembly.

Refit

1. Locate the instrument panel front passenger side trim panel assembly to the mounting position, and press the clips in place.
2. Fit and tighten 5 screws fixing the instrument panel front passenger side trim panel assembly to the instrument panel body.
3. Locate the instrument pack frame to the mounting position, and press the clips in place.
4. Fit the instrument panel central air outlet.

☞ **Instrument Panel Central Air Outlet Refit**

5. Fit the entertainment panel switch.

☞ **Entertainment Panel Switch Refit**

6. Fit the right instrument panel end cover.

☞ **Instrument Panel End Cover Refit**

7. Connect the negative battery cable.

Instrument Panel Beam Assembly
Remove

1. Disconnect the negative battery cable.
2. Remove the instrument panel body assembly.

☞ **Instrument Panel Body Assembly Remove**

3. Remove the A/C air inlet grille Panel.

☞ **A/C Air Inlet Grille Panel Remove**

4. Remove 2 bolts fixing the T-BOX to the instrument panel beam, disconnect the harness, and remove the T-BOX.

5. Remove 1 nut fixing the driver compartment fuse box to the instrument panel beam and remove the driver compartment fuse box.

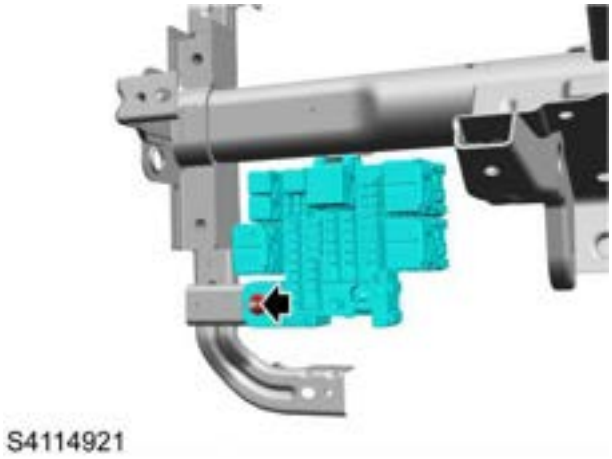

6. Remove 2 bolts fixing the gateway module to the beam, disconnect the harness, and remove the gateway module.

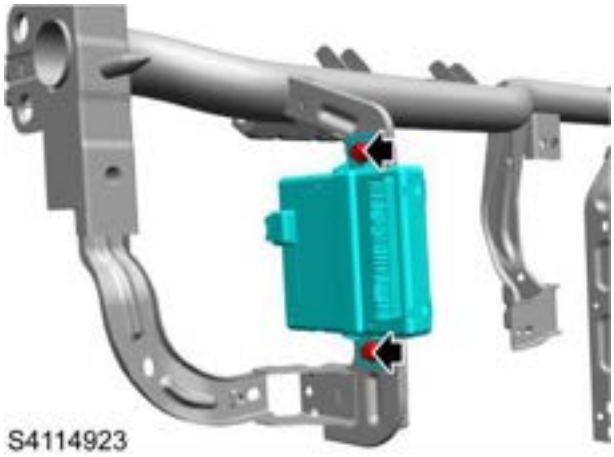

7. Remove 3 bolts fixing the steering column assembly to the instrument panel beam, remove the steering column assembly and support it reliably.

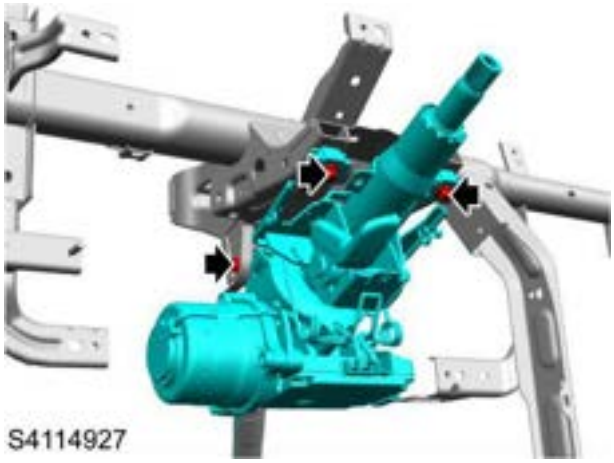

8. Remove 5 bolts fixing the A/C box assembly to the instrument panel beam.

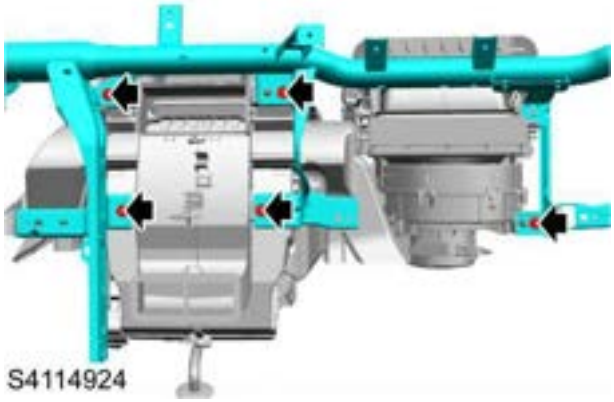

9. Remove 8 bolts fixing the instrument panel beam to the body.

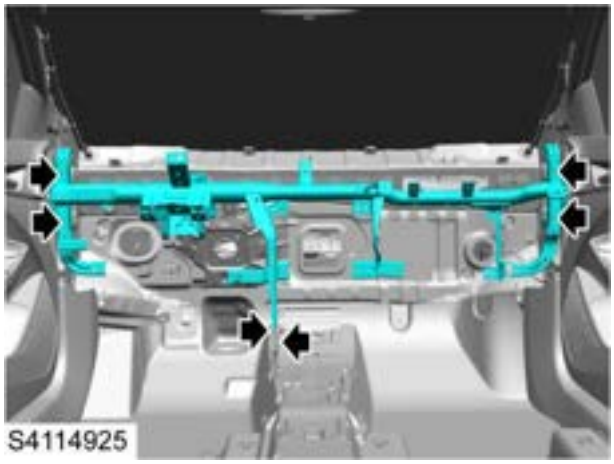

10. Disengage the harness clip from the instrument panel beam, and lift the instrument panel beam out of the vehicle with assistance.

Refit

1. With assistance, locate the instrument panel beam assembly to the correct position of the body, and fit the harness clip of the instrument panel beam.
2. Fit 8 bolts fixing the instrument panel beam assembly to the body, tighten them to **19-25Nm** , and check the torque.
3. Fit 5 bolts fixing the A/C box assembly to the instrument panel beam, tighten them to **5-6.6Nm** , and check the torque.
4. Fit 3 bolts fixing the steering column to the instrument panel beam assembly, tighten 2 upper bolts to **19-25Nm** and 1 lower bolt to **26-34Nm** , and check the torque.
5. Connect the harness connector, fit 2 nuts fixing the GW module to the beam, and tighten them.
6. Fit and tighten 1 nut fixing the driver compartment fuse box to the beam.
7. Connect the harness connector, fit 2 bolts fixing the T-BOX to the instrument panel beam, and tighten them.
8. Fit the A/C air inlet grille panel.

☞ **A/C Air Inlet Grille Panel Refit**

9. Fit the instrument panel body assembly.

☞ **Instrument Panel Body Assembly Refit**

10. Connect the negative battery cable.

Centre Console Heater Closure Panel Assembly

Remove

1. Remove 1 clip fixing the centre console heater closure panel to the A/C box.

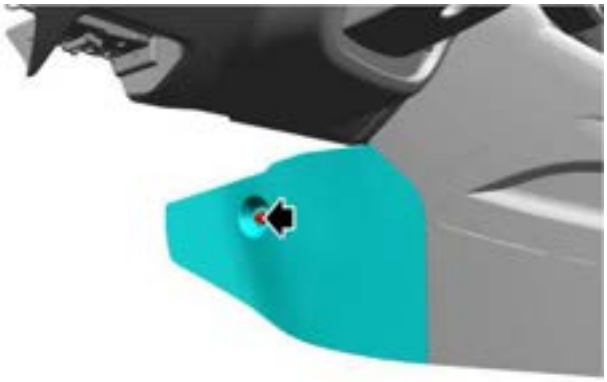

S4124631

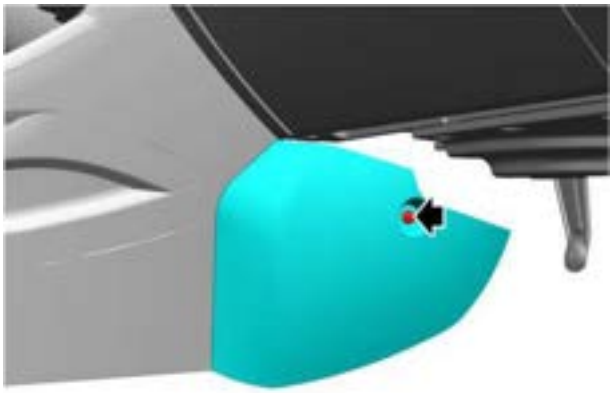

S4124632

2. Pry off the clips fixing the centre console heater closure panel to the centre console assembly from the edge of the centre console heater closure panel and remove the centre console heater closure panel.

Refit

1. Align the clip of the centre console heater closure panel to the hole of the centre console assembly, push it hard to the end, and clamp it in place.
2. Fit 1 clip fixing the centre console heater closure panel to the A/C box.

Centre Console Cup Holder Assembly

Remove

1. Remove the centre console assembly.

Centre Console Assembly Remove

2. Pry off the clips along with the edge of the centre console front storage box, disconnect the harness connector and remove the centre console front storage box.

3. If necessary, remove 4 screws fixing the wireless charging module to the centre console front storage box, and remove the wireless charging module.

Refit

1. If removed, fit 4 screws fixing the mobile phone wireless charging module to the front storage box of the centre console, and tighten them.
2. Locate the centre console front storage box to the mounting position, and press the clips in place.
3. Fit the centre console assembly.

Centre Console Assembly Refit

Centre Console Assembly

Remove

1. Disconnect the negative battery cable.
2. Remove the centre console heater closure panel assembly.

☞Centre Console Heater Closure Panel Assembly Remove

3. Remove the centre console upper trim panel assembly.

☞Centre Console Upper Trim Panel Assembly Remove

4. Pry off the clips from the centre console assembly along the edge of the 12V power supply cover plate, disconnect the harness connector, and remove the 12V power supply cover plate.

5. Remove 2 screws fixing the centre console assembly to the instrument panel.

6. Move the front seat to a proper position, pry off the bolt trim covers, and remove 6 bolts fixing the centre console to both the left and right sides of the bracket.

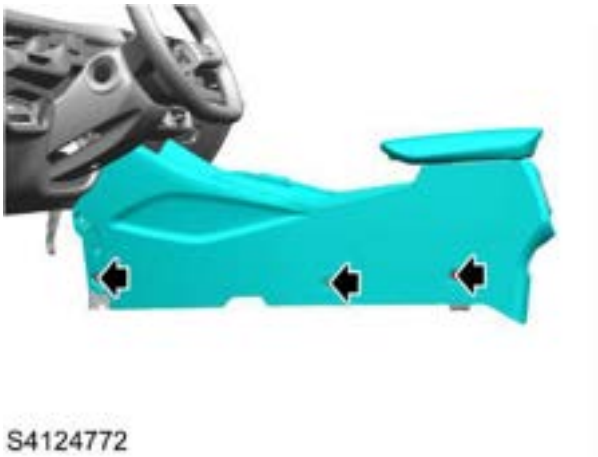

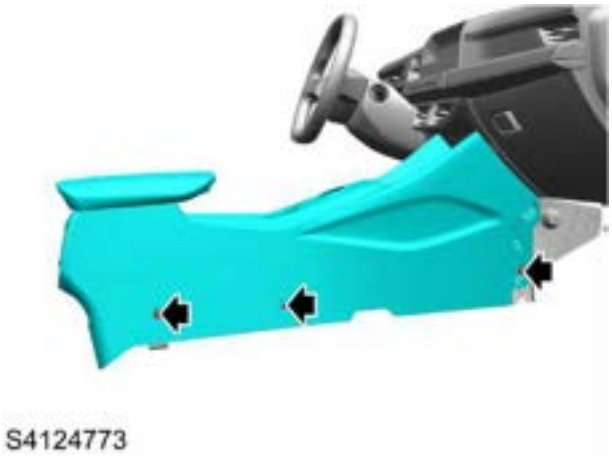

7. Disconnect the harness connector, loosen the clip and lift the centre console assembly out of the vehicle with assistance.

Refit

1. With assistance, lift the centre console assembly into the vehicle.
2. Connect the harness connector and press the harness clips.
3. Fit 6 bolts fixing the centre console to both left and right sides of the bracket, tighten them to **3-4Nm** , then check the torque, and fit the trim cover.
4. Fit and tighten 2 screws fixing the centre console assembly to the instrument panel, press the clips and fit the 12V power cover plate.
5. Fit the centre console upper trim panel.

☞Centre Console Upper Trim Panel Refit

6. Fit the centre console heater closure panel.

☞Centre Console Heater Closure Panel Refit

7. Connect the negative battery cable.

Remove

1. Remove the centre console rear panel.

☞Centre Console Rear Panel Remove

2. Remove 4 screws fixing the centre console rear air outlet to the centre console rear panel, pry off the clip, and remove the centre console rear air outlet.

Refit

1. Locate the rear air outlet to the mounting position, and press the clips in place.
2. Fit the centre console rear panel.

☞Centre Console Rear Panel Refit

Centre Console Armrest Assembly

Remove

1. Remove the centre console rear panel assembly.

Centre Console Rear Panel Assembly Remove

2. Pry off 2 circlips fixing the centre console armrest assembly to the centre console assembly.

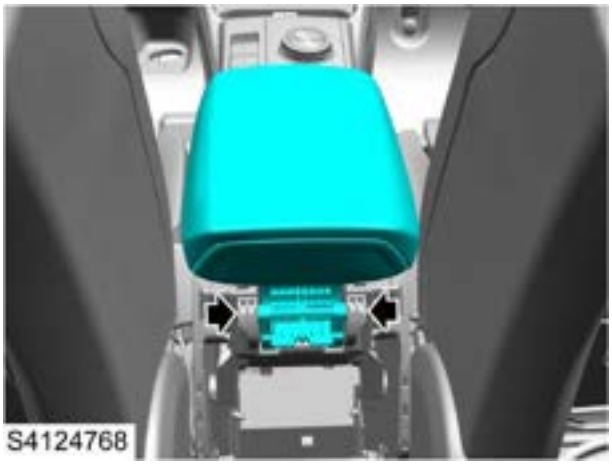

3. Remove the centre console armrest assembly.

Refit

1. Locate the centre console armrest assembly on the centre console assembly.
2. Fit 2 circlips fixing the centre console armrest assembly to the centre console assembly firmly.
3. Fit the centre console rear panel assembly.

Centre Console Rear Panel Assembly Refit

Centre Console Upper Trim Panel Assembly and Switch

Remove

1. Disconnect the negative battery cable.
2. Remove the shifter knob bezel.

3. Pry off the clips along the edge of the centre console upper trim panel, disconnect the harness connectors, and remove the centre console upper trim panel.

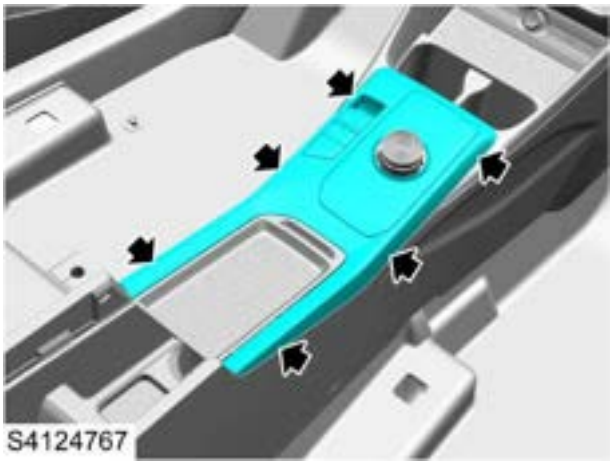

4. If necessary, remove 2 screws fixing the electronic parking brake switch to the upper trim panel, and remove the electronic parking brake switch.

Refit

1. If removed, fit and tighten 2 screws fixing the electronic parking switch to the centre console upper trim panel.
2. Connect the harness connector, locate the centre console upper trim panel to the mounting position, and press the clips in place.
3. Fit the shifter knob bezel.
4. Connect the negative battery cable.

Centre Console Rear Panel Assembly

Remove

1. Disconnect the negative battery cable.
2. Pry off the clip fixing the centre console rear panel to the centre console assembly from the edge of the centre console rear panel, disconnect the harness connector, and remove the centre console rear panel.

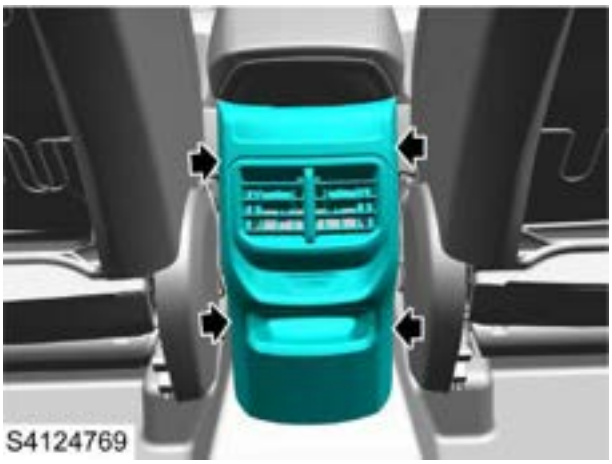

3. If necessary, remove 2 screws fixing the centre console rear storage box to the centre console rear panel, pry off the clip and remove the centre console rear storage box.
4. If necessary, remove 2 screws fixing the USB charging module to the centre console rear panel, and remove the USB charging module.
5. If necessary, remove 4 screws fixing the centre console rear air outlet to the centre console rear panel, pry off the clip, and remove the centre console rear air outlet.

Refit

1. If removed, fit 4 screws fixing the centre console rear air outlet to the centre console assembly, and tighten them.
2. If removed, fit 2 screws fixing the USB charging module to the centre console assembly, and tighten them.
3. If removed, align the clip of the centre console rear storage box to the hole of the centre console rear panel, push it hard to the end, clamp it in place, fit 2 screws and tighten them.
4. Connect the harness connector, align the clip of the centre console rear panel assembly with the hole of centre console body, push it hard to the end, and clamp it in place.
5. Connect the negative battery cable.

Entertainment Panel Switch

Remove

1. Disconnect the negative battery cable.
2. Pry off the clips fixing the entertainment panel switch to the instrument panel, disconnect the harness connector, and remove the entertainment panel switch.

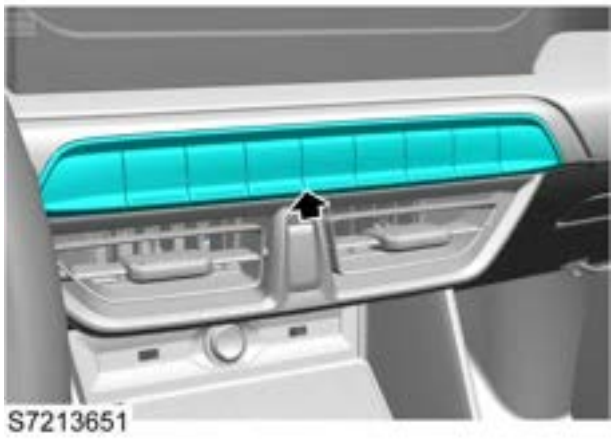

Refit

1. Connect the harness connector of the entertainment panel switch.
2. Locate the entertainment panel switch to the instrument panel, press the clips, and ensure that the clips are fully engaged.
3. Connect the negative battery cable.

Seats

Specification

Torque

Description	Value
Bolt-Front seat to Body	40-50Nm
Bolt-Back of front seat to framework bothsides	40-46Nm
Bolt-Rear seat cushion hinge bracket to bady	35-45Nm
Bolt-Rear seat cushion skeleton to bady	40-50Nm

Description and Operation

System Layout

Seat Layout

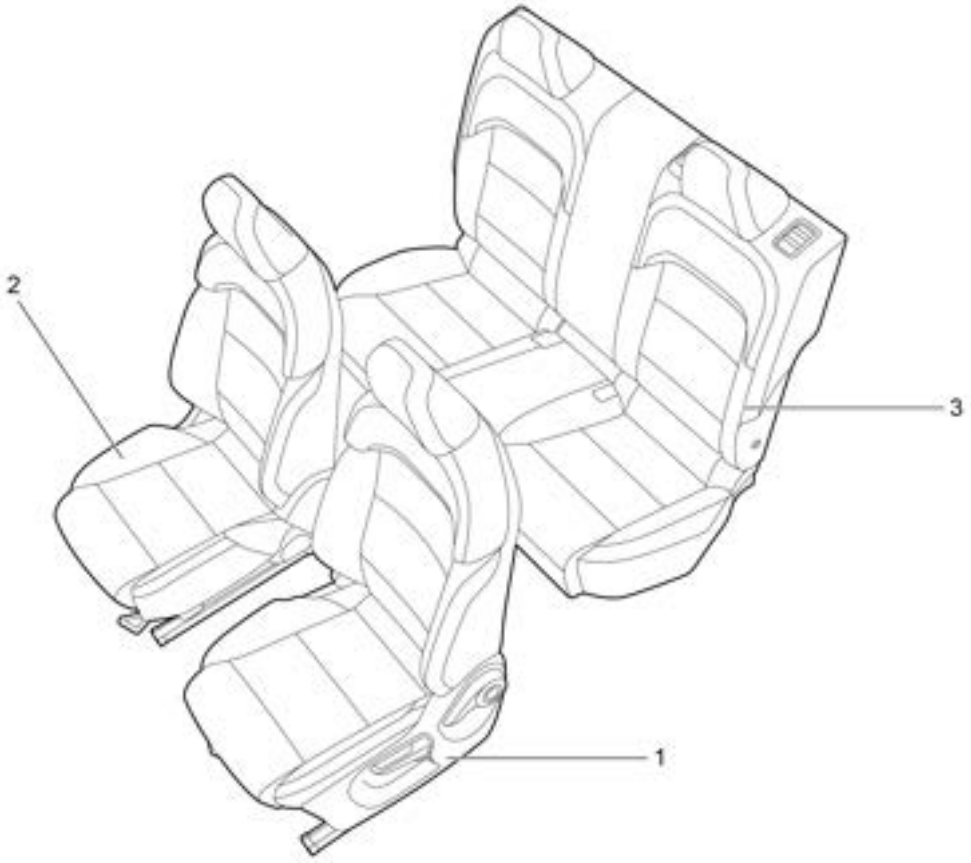

S4210208

1. Driver seat
2. Front Passenger Seat
3. Rear Seat

Description

Front Seat Assembly

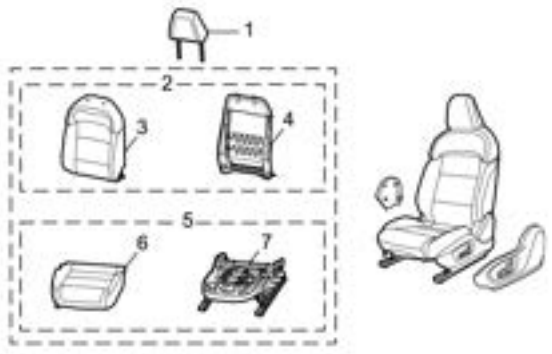

S4214052

1. Seat Headrest
2. Seat Back Assembly
3. Seat Back Cover
4. Seat Back Frame
5. Seat Cushion Assembly
6. Seat Cushion Cover
7. Seat Cushion Frame

The common seat assembly mainly consists of headrest, seat back, seat cushion and accessories. Among them, both seat back assembly and seat cushion assembly consist of cover, foam and frame. The seat assembly and the main components are repaired as fittings according to the vulnerability and maintainability of the components.

The front seat assembly may have different configurations depending on the vehicle configuration and seat exterior trim, for example, 4-way manual seat (forward/backward adjustment, seat back inclination); 6-way manual/power seat (forward/backward adjustment, seat back inclination, and seat height); fabric and PU; seat heating function.

Rear Seat Assembly

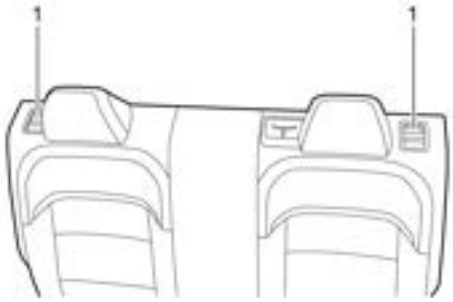

S4214053

The rear seat of this model is a 4/6 type seat with reclinable seat back. If you want to expand the space of the luggage compartment, first fully lower (or remove) all the rear seat headrests, and pull up the control lock knobs respectively on both sides (1) to fold the seat backs forward. When unfolding the rear seat back again, pull up the back control lock knob to release the locked state, push the back until it reaches an appropriate position, and the back is locked when you hear a click.

Operation

Front Manual Seat

S4214055

1. Seat Horizontal Position Adjusting Handle
2. Seat Height Adjusting Handle (if equipped)
3. Seat Back Adjusting Handle

The horizontal position and height of the seat cushion and the seat back inclination can be adjusted by the handle according to individual needs.

The horizontal position of the seat can be adjusted by the handle (1) in the front of the seat cushion. Lift the handle and pull it to the desired position. Release the handle until it clicks to lock the seat to the selected position. The seat height adjusting handle (2) is located on the trim panel outside the seat cushion. The seat can be raised or lowered within a certain range by lifting up or pressing down the handle repeatedly. The seat back inclination adjusting handle (3) is located in the rear of the height adjusting handle. Press the handle forwards or backwards to adjust the seat back inclination. Release the seat back adjusting handle to lock the seat back to the selected position.

Seat Headrest

S4214054

The front seat headrest has 4 adjustable heights and the rear seat headrest has 3 adjustable heights. When adjusting the headrest from a low position to a high one, pull the headrest directly upward, and gently press the headrest downward after it reaches the desired position to make sure that it is locked in position. To remove the headrest, hold the left guide sleeve button of the headrest, and pull the headrest upward to remove it. When adjusting the headrest from a high position to a low one, press the left guide button, and press the headrest downward, release the button after it reaches the desired position, and gently press the headrest downward to make sure that it is locked in position.

Service Guide

Front Seat Assembly

Remove

1. Adjust the seat to the rearmost position.
2. Remove and discard 2 bolts fixing the front end of the seat track to the body.

3. Adjust the seat to the frontmost position.
4. Remove and discard 2 bolts fixing the rear end of the seat track to the body.

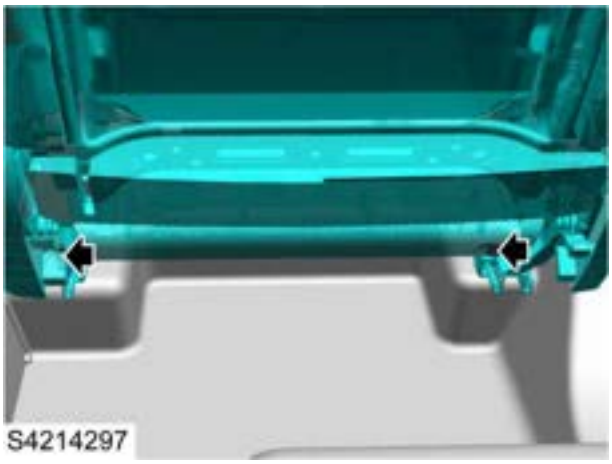

5. Turn off the Start switch and disconnect the positive and negative battery cables (disconnect the ground wire first). Wait for 10 minutes until thebackup circuit is discharged.
6. Disconnect the harness connector, and remove the front seat assembly from the vehicle.

Refit

1. Ensure the seat tracks are properly aligned with the base, and locate the front seat to the body.
2. Connect the harness connector.
3. Fix the front seat to the body, fit 4 bolts (front and rear), tighten them to **40-50Nm** , and check the torque.
4. Adjust the seat to a proper position, and connect the negative battery cable.

Seat Headrest Guide Rod

Remove

1. Front Seat Headrest Guide:

   a. Remove the front seat assembly.

☞**Front Seat Assembly Remove**

   b. Remove the front seat back assembly.

☞**Front Seat Back Assembly Remove**

   c. Loosen the elastic straps on the seat back cover.

   d. Pry off the clip fixing the front and back covers of the seat back, and separate the front and back covers.

   e. Press and hold the guide sleeve button of the headrest, and pull the headrest upward to remove it.

   f. Mark the location of the C-ring fixing the seat back cover to the foam, remove it and open the cover.

   g. Stretch out the hand inside the seat back foam, press the clip at the lower end of the headrest guide sleeve and push out the headrest guide sleeve upwards.

S4213977

2. Rear Seat Headrest Guide:

   a. Remove the rear seat back assembly.

☞**Rear Seat Back Assembly Remove**

   b. Pry off the clip fixing the front and rear covers of the rear seat back, and separate the front and rear covers.

   c. Press and hold the headrest guide sleeve button from the back plate hole of the rear seat, and pull the headrest upward to remove the headrest.

   d. Stretch out the hand inside the seat back foam, press the clip at the lower end of the headrest guide sleeve and push out the headrest guide sleeve upwards.

S4213977

Refit

1. Front Seat Headrest Guide:

   a. Fit 2 seat headrest adjusting guides to the seat back frame.

   b. Fit the seat back cover onto the back foam, secure with the elastic strap and C-ring, and check the fit between the cover and the back foam.

   c. Locate the headrest correctly on the headrest mounting guide sleeve, and then insert it into the guide sleeve. Press and hold the button, push the headrest down to the appropriate position.

   d. Fix the front and back covers of the seat back in place with clips.

   e. Fix the elastic straps of the seat back covers.

   f. Fit the front seat back assembly.

☞**Front Seat Back Assembly Refit**

   g. Fit the front seat assembly.

☞**Front Seat Assembly Refit**

2. Rear Seat Headrest Guide:

   a. Fit 2 seat headrest adjusting guides on the seat back frame, and zip up the cover.

   b. Locate the headrest correctly on the headrest mounting guide sleeve, and then insert it into the guide sleeve. Press and hold the button, push the headrest down to the appropriate position.

   c. Fix the front and back covers of the seat back in place with clips.

   d. Fit the rear seat back.

☞**Rear Seat Back Assembly Refit**

Front Seat Inner Trim Panel

Remove

1. Remove the front seat assembly.

Front Seat Assembly Remove

2. Pry off the front seat interior trim panel screw trim cover.

S4214298

3. Remove 2 screws fixing the front seat interior trim panel to the seat frame.

S4214299

4. Lift up the interior trim panel, pull it outwards, loosen the clip, and remove the front seat interior trim panel.

Refit

1. Locate the front seat interior trim panel to the seat frame, and press the clip in place.
2. Fit and tighten 2 screws fixing the interior trim panel to the seat frame.
3. Fit the front seat interior trim panel screw cover.
4. Fit the front seat assembly.

Front Seat Assembly Refit

Front Seat Exterior Trim Panel
Remove

1. Remove the front seat assembly.

☞ Front Seat Assembly Remove

2. Remove the seat exterior trim panel - high configuration.
   a. Insert a flat-bladed tool into the inside of the front seat height adjusting handle, pry off the clips fixing the height adjusting handle to the height adjusting handle bracket, and remove the front seat height adjusting handle.

S4214300

   b. Pry open the front seat back adjusting handle trim cover along the gap with a flat-bladed tool.
   c. Remove 1 screw fixing the seat back adjusting handle to the seat.

S4214301

   d. Insert a flat-bladed tool from the edge into the inside of the front seat height adjusting handle, and carefully pry off the front seat back adjusting handle outwards.
   e. Remove 2 screws fixing the seat exterior trim panel to the seat frame, pry off the retaining clips, and remove the exterior trim panel.

S4214302

3. Remove the seat exterior trim panel - low configuration.
   a. Pry open the front seat back adjusting handle trim cover along the gap with a flat-bladed tool.
   b. Remove 1 screw fixing the seat back adjusting handle to the seat.

S4214301

   c. Insert a flat-bladed tool from the edge into the inside of the front seat height adjusting handle, and carefully pry off the front seat back adjusting handle outwards.
   d. Remove 2 screws fixing the seat exterior trim panel to the seat frame, pry off the retaining clips, and remove the exterior trim panel.

S4214302

Refit

1. Fit the seat exterior trim panel - low configuration.

a. Fix the front seat exterior trim panel to the seat frame, press the clips in place, fit and tighten 2 screws.

b. Fix the front seat back adjusting handle to the seat, fit and tighten 1 screw.

c. Fit the front seat back adjusting handle trim cover.

2. Fit the seat exterior trim panel - high configuration.

a. Fix the front seat exterior trim panel to the seat frame, press the clips in place, fit and tighten 2 screws.

b. Fix the front seat back adjusting handle to the seat, fit and tighten 1 screw.

c. Fit the front seat back adjusting handle trim cover.

d. Insert the front seat height adjusting handle into the adjusting handle bracket, and ensure that the retaining clips are fitted in place.

3. Fit the front seat assembly.

☞ **Front Seat Assembly Refit**

Front Seat Backrest Assembly

Remove

1. Remove the front seat exterior trim panel.

Front Seat Exterior Trim Panel Remove

2. Remove the front seat interior trim panel.

Front Seat Interior Trim Panel Remove

3. Loosen the hooks fixing the seat back cover to the bottom of the seat.
4. Remove 4 bolts fixing the front seat back to the cushion frame.

S4214303

S4214304

5. Disconnect the harness connector, and remove the front seat back.

Refit

1. Connect the harness connector, fix the front seat back to the seat cushion frame, fit 4 bolts on both sides, tighten them to **40-46Nm** , and check the torque.
2. Fix the seat back cover to the seat and secure it with hooks.
3. Fit the front seat interior trim panel.

Front Seat Interior Trim Panel Refit

4. Fit the front seat exterior trim panel.

Front Seat Exterior Trim Panel Refit

Front Seat Cushion Assembly

Remove

1. Remove the front seat exterior trim panel.

Front Seat Exterior Trim Panel Remove

2. Remove the front seat interior trim panel.

Front Seat Interior Trim Panel Remove

3. Remove the front seat belt buckle.

Front Seat Belt Buckle Remove

4. Loosen the hooks fixing the seat back cover to the bottom of the seat.
5. Remove 4 bolts fixing the seat back to the seat cushion frame, and remove the seat back.

S4214305

S4214306

6. Remove the front seat cushion assembly.

Refit

1. Fix the seat back to the seat cushion frame, fit 4 bolts on both sides, tighten them to **40-46Nm** , and check the torque.
2. Fix the seat back cover to the seat and secure it with hooks.
3. Fit the front seat belt buckle.

Front Seat Belt Buckle Refit

4. Fit the front seat interior trim panel.

Front Seat Interior Trim Panel Refit

5. Fit the front seat exterior trim panel.

Front Seat Exterior Trim Panel Refit

Front Seat Cushion Cover

Remove

1. Remove the front seat assembly.

☞ **Front Seat Assembly Remove**

2. Remove the front seat cushion assembly.

☞ **Front Seat Cushion Assembly Remove**

3. Pry off the clip fixing the front seat cushion cover to the seat cushion frame.
4. Release the seat cushion foam from the seat cushion frame and remove the seat cushion foam and cover.
5. Release the elastic strap, remove the C-ring fixing the seat cushion cover to the seat cushion foam and mark its position.

Refit

1. Fit the seat cushion foam into the seat cushion cover, secure it with the elastic strap and C-ring, and check the fit between the cover and the cushion foam.
2. Fit the seat cushion foam with cover to the seat cushion frame, and secure the seat cushion cover with clips.
3. Fit the front seat cushion assembly.

☞ **Front Seat Cushion Assembly Refit**

4. Fit the front seat assembly.

☞ **Front Seat Assembly Refit**

Rear Seat Backrest Assembly

Remove

1. Remove the rear seat cushion assembly.

☞Rear Seat Cushion Assembly Remove

2. Remove 1 bolt fixing the rear centre seat belt to the body.

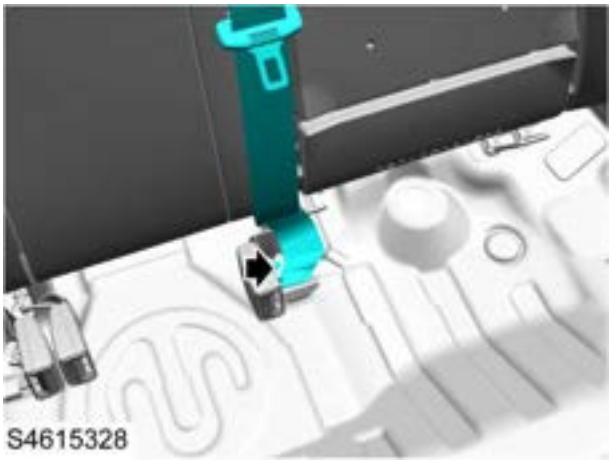

3. Unlock the control lock knobs on the top of both sides of the seat back to fold the rear seat back down.

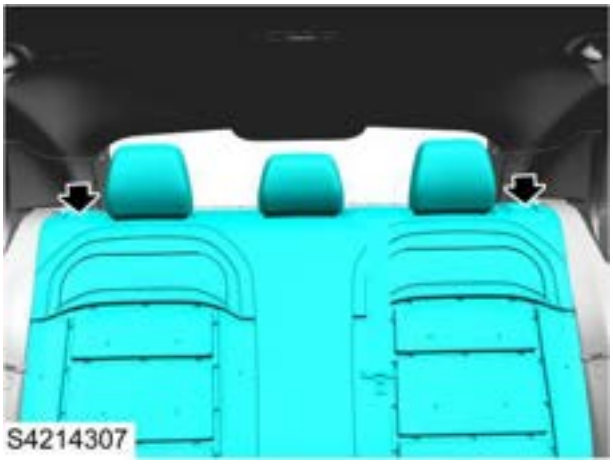

4. Lift the rear seat back upward to respectively remove both sides of the rear seat back from the bracket, and remove the rear seat back from the vehicle.

Refit

1. Locate both sides of the rear seat back to the bracket and fit it in place.
2. Pull up the control lock knob on the top of the seat back, and unfold the rear seat back upward to the rearmost position.
3. Fix the rear centre seat belt to the body, fit 1 bolt, tighten it to TBD, and check the torque.
4. Fit the rear seat cushion assembly.

☞Rear Seat Cushion Assembly Refit

Rear Seat Back Cover

Remove

1. Remove the rear seat back assembly.

Rear Seat Back Assembly Remove

2. Press and hold the left guide sleeve button of the headrest, and pull the headrest upward to remove.
3. Pry off the clip fixing the seat back control lock frame, and remove the seat back control lock frame.

4. Pry off the clip fixing the front and rear covers of the rear seat back, and separate the front and rear covers.
5. Unzip the zipper upward, press the clip from the hole of the seat back frame, and push out the headrest guide sleeve upward.

6. Pry off the clip fixing the rear centre seat belt frame to the rear seat back, and pass the rear centre seat belt through the fascia hole.

7. Mark the locations of the C-rings fixing the seat back cover and foam, remove them, then remove the cover and foam.

Refit

1. Align the cover with the front of the seat back foam and secure with C-rings.
2. Fix the seat back cover and foam on the seat back frame.
3. Pass the rear centre seat belt through the seat belt hole, fix the rear centre seat belt frame to the seat back, and press the clip in place.
4. Fit 2 seat headrest adjusting guide sleeves on the seat back frame, and zip up the cover.
5. Fix the front and back covers of the seat back in place with clips.
6. Fix the seat back control lock frame to the seat back, and press the clip in place.
7. Locate the headrest correctly on the headrest mounting guide sleeve, and then insert it into the guide sleeve. Press and hold the button, push the headrest down to the appropriate position.
8. Fit the rear seat back assembly.

Rear Seat Back Assembly Refit

Rear Seat Cushion Assembly

Remove

1. Lift up the rear seat cushion assembly, and remove 2 clips (1) fixing the front end of the cushion.
2. Push the rear seat cushion towards the rear of the vehicle forcibly to release the retaining clip (2) at the rear end.

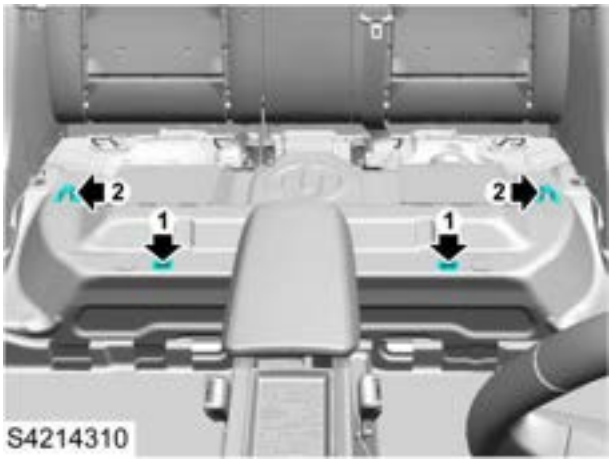

3. Remove the rear seat cushion.

Refit

1. Lift the front end of the rear seat cushion, and fix the rear end with hooks.
2. Fix the front end of the rear seat cushion with clips.

Rear Seat Cushion Cover

Remove

1. Remove the rear seat cushion assembly.

Rear Seat Cushion Assembly Remove

2. Loosen the straps and J-clamps fixing the seat cushion cover to the seat frame.
3. Mark the positions of the C-rings fixing the seat cushion cover and foam, then remove the C-rings.
4. Remove the cover from the cushion foam.

Refit

1. Fit the cushion cover and fix it on the cushion foam with C-ring.
2. Fix the seat cushion cover and foam onto the seat frame with straps and J-clamps.
3. Fit the rear seat cushion assembly.

Rear Seat Cushion Assembly Refit

Rear Seat Back Cushion Hinge Bracket

Remove

1. Remove the rear seat back assembly.

Rear Seat Back Assembly Remove

2. Remove the rear seat cushion assembly.

Rear Seat Cushion Assembly Remove

3. Remove 2 nuts (1) and 1 bolt (2) fixing the rear seat back cushion hinge bracket to the body.

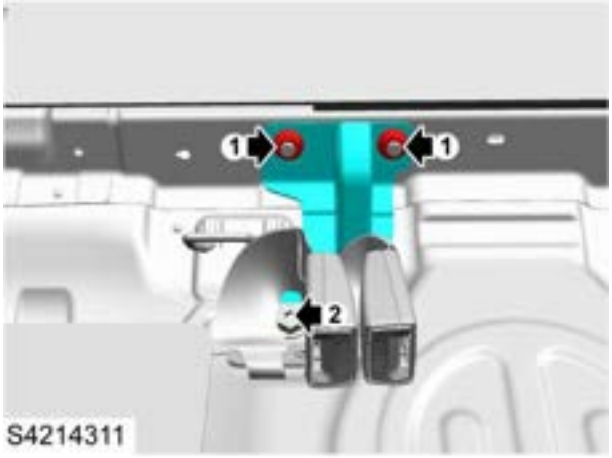

4. Remove the rear seat back cushion hinge bracket.

Refit

1. Locate the rear seat cushion hinge bracket to the bolt hole of body panel, and fit it to the body panel.
2. Fit 2 nuts fixing the rear seat cushion hinge bracket to the body, tighten them to **35-45Nm** , and check the torque.
3. Fit 1 bolt fixing the rear seat cushion hinge bracket to the body, tighten it to **35-45Nm** , and check the torque.
4. Fit the rear seat cushion assembly.

Rear Seat Cushion Assembly Refit

5. Fit the rear seat back assembly.

Rear Seat Back Assembly Refit

Remove

1. Disconnect the negative battery cable.
2. Remove the manual service disconnect.

Manual Service Disconnect (MSD) Remove

3. Pry off the clip, remove the rear carpet left/right battens.

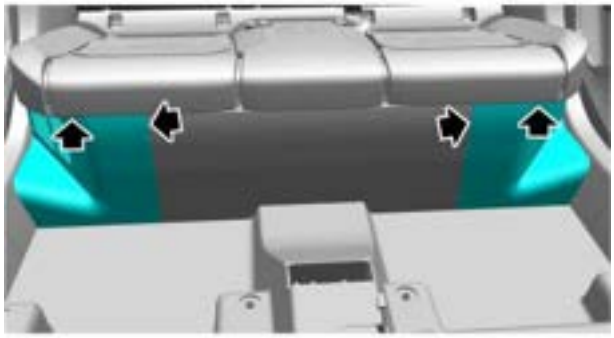

S4214362

4. Pry off the clip, remove the rear carpet middle batten.

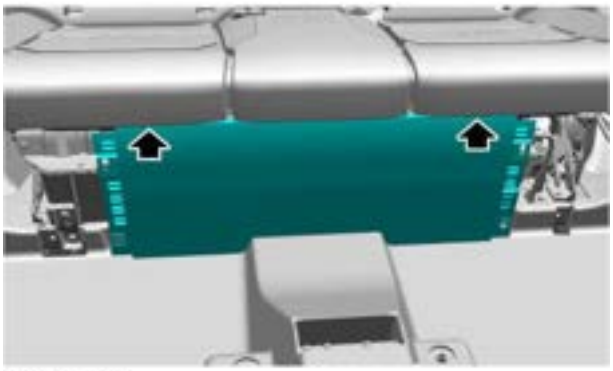

S4214363

Refit

1. Fit the rear carpet middle battens, press the clips in place.
2. Fit the rear carpet left and right battens, press the clips in place.
3. Fit the manual service disconnect.

Manual Service Disconnect (MSD) Refit

4. Connect the negative battery cable.

Remove

1. Disconnect the negative battery cable.
2. Remove the rear carpet battens.

Rear Carpet Battens Remove

3. Remove the rear seat cushion.

Rear Seat Cushion Remove

4. Remove 6 bolts fixing the rear seat cushion frame to the body.

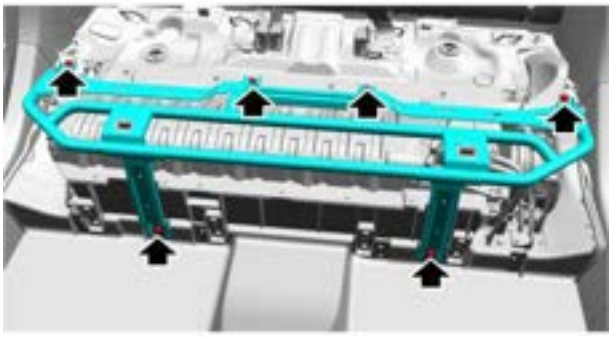

S4214364

5. Remove the rear seat cushion frame.

Refit

1. Fix the frame of the rear seat cushion to the body, fit 6 bolts, tighten them to **40-50Nm** , and check the torque.
2. Fit the rear seat cushion.

Rear Seat Cushion Refit

3. Fit the rear carpet battens.

Rear Carpet Battens Refit

4. Connect the negative battery cable.

Remove

1. Press and hold the headrest guide sleeve button from the back plate hole of the rear seat, and pull the headrest upward to remove the headrest.

Refit

1. Locate the headrest correctly on the headrest mounting guide sleeve, and then insert it into the guide sleeve. Press and hold the button, push the headrest down to the appropriate position.

Door Interior Trim

Service Guide

Front Door Interior Trim Panel

Remove

1. Disconnect the negative battery cable.
2. Pry off the inner handle screw trim cover and the front door armrest screw trim cover.

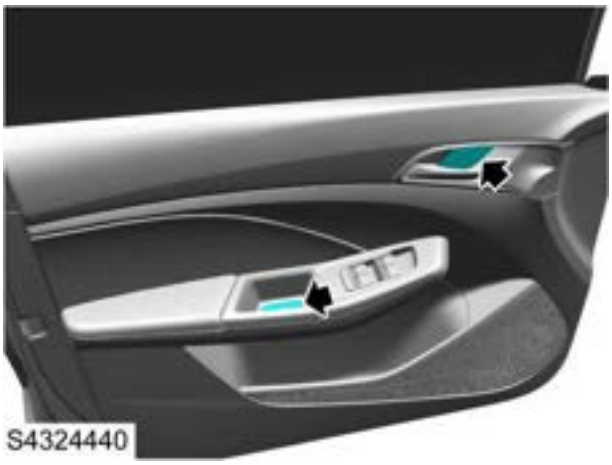

3. Remove 2 bolts fixing the front door interior trim panel to the door.

4. Pry off the front door window regulator switch, and disconnect the harness connector from the back.

5. Pry off the clip fixing the front door interior trim panel to the door, remove and discard the clip.

6. Disconnect the interior handle cable assembly wire, disconnect the harness connector, and remove the front door interior trim panel.

Refit

1. Connect the harness connector, fit the stay wire of the inner handle cable assembly, align the new clip with the corresponding panel mounting hole, and fix the front door interior trim panel to the door.
2. Connect the harness connector, fit the front door window regulator switch, and press the clip in place.
3. Fit and tighten 2 bolts fixing the front door trim panel to the door, and fit the bolt covers.
4. Connect the negative battery cable.

Front Door Inner Handle

Remove

1. Remove the front door interior trim panel.

☞ **Front Door Interior Trim Panel Remove**

2. Remove 8 screws fixing the front door inner handle to the interior trim panel.

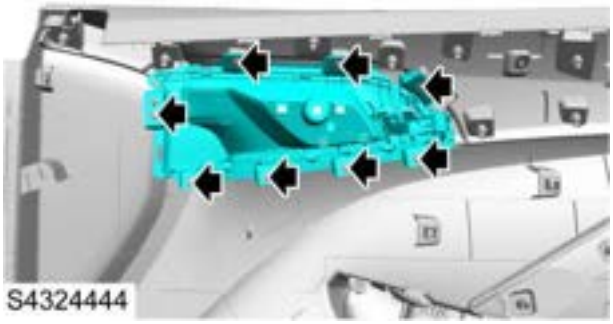

3. Remove the front door inner handle from the door interior trim panel.

Refit

1. Fix the front door inner handle to the interior trim panel, fit and tighten 8 screws.
2. Fit the front door interior trim panel.

☞ **Front Door Interior Trim Panel Refit**

Rear Door Interior Trim Panel

Remove

1. Disconnect the negative battery cable.
2. Pry off the inner handle screw trim cover and the rear door pull cup screw trim cover.

3. Remove 2 bolts fixing the rear door trim panel to the door.

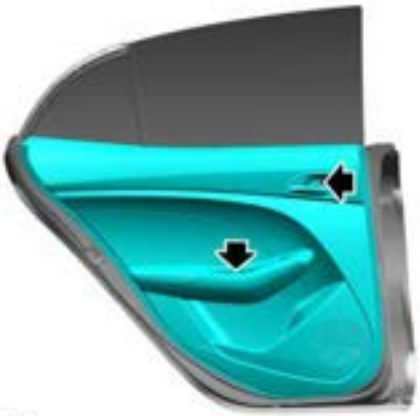

4. Pry off the rear door window regulator switch, and disconnect the harness connector from the back.

5. Remove the rear door window interior trim panel assembly, pry off the clips fixing the rear door interior trim panel to the door, remove and discard the clips.

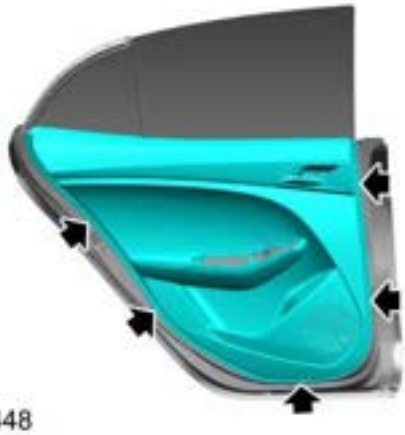

6. Disconnect the interior handle cable assembly wire, disconnect the harness connector, and remove the rear door interior trim panel.

Refit

1. Connect the harness connector, fit the stay wire of the inner handle cable assembly, align the new clip with the corresponding panel mounting hole, and fix the rear door interior trim panel to the door.
2. Fit the rear door window interior trim panel assembly, connect the harness connector, fit the rear door window regulator switch, and press the clip in place.
3. Fit and tighten 2 bolts fixing the rear door trim panel to the door, and fit the bolt covers.
4. Connect the negative battery cable.

Rear Door Inner Handle

Remove

1. Remove the rear door interior trim panel.

Rear Door Interior Trim Panel Remove

2. Remove 6 screws fixing the rear door inner handle to the rear door interior trim panel.

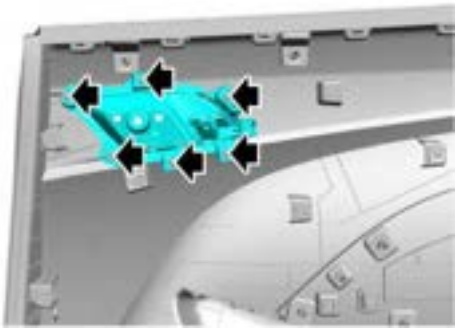

3. Remove the rear door inner handle from the door interior trim panel.

Refit

1. Fix the rear door inner handle to the interior trim panel, fit and tighten 6 screws.
2. Fit the rear door trim panel.

Rear Door Trim Panel Refit

Interior Trim Panel

Specification

Torque

Description	Value
Bolt-Front seat belt to body	35-45Nm
Bolt-Rear seat belt to body	35-45Nm

Service Guide

A Pillar Upper Trim Panel

Remove

1. Pry open the front door body side weatherstrips.
2. Pry open the clips of A pillar upper trim panel assembly.

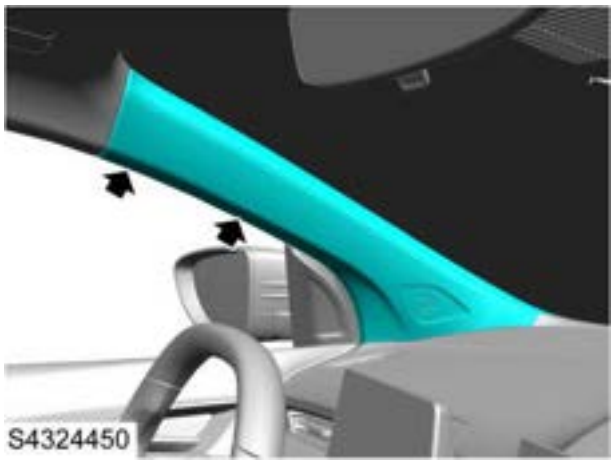

3. Remove the A pillar upper trim panel assembly.

Refit

1. Locate the A pillar upper trim panel to the body, and snap it into place.
2. Fit the front door weatherstrip of the A pillar upper trim panel assembly at the body side.

A Pillar Lower Trim Panel

Remove

1. Pull open the front door body side weatherstrip outside the A pillar lower trim panel assembly.
2. Pry open the front end clip of the door sill trim panel, and separate the door sill trim panel from the lower end of the A pillar lower trim panel assembly.

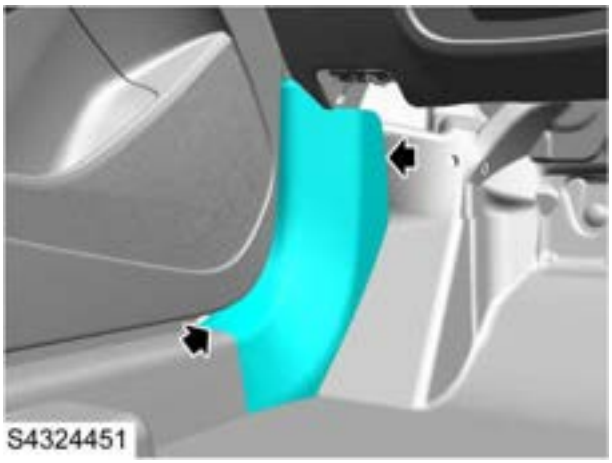

3. Pry open the clips of A pillar lower trim panel assembly and remove the A pillar lower trim panel.

Refit

1. Fit the A pillar lower trim panel assembly, and ensure that the clip is fitted in place.
2. Insert the front end clip of the door sill trim panel into the hole of the A pillar lower trim panel and ensure that it is fitted in place.
3. Fit the front door weatherstrip.

B Pillar Upper Trim Panel

Remove

1. Pull open the door weatherstrips on both sides of the B pillar upper trim panel assembly.
2. Remove the door sill trim panel assembly.

☞ **Door Sill Trim Panel Assembly Remove**

3. Remove 1 bolt fixing the front seat belt to the body.

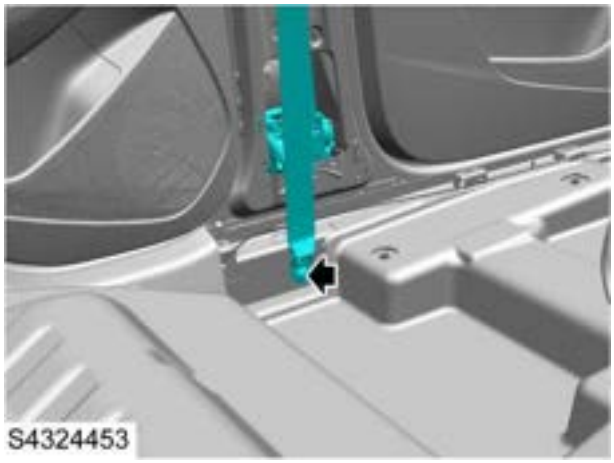

4. Pry open the upper clip of the B pillar lower trim panel to separate the B pillar upper trim panel from the upper part of B pillar lower trim panel assembly.
5. Pry open the screw trim cover of the B pillar upper trim panel, and remove 1 bolt fixing the B pillar upper trim panel to the body.

6. Pry open the retaining clip, remove the B pillar upper trim panel assembly and pull out the seat belt.

Refit

1. Pass the seat belt through the hole of the B pillar upper trim panel assembly.
2. Locate the B pillar upper trim panel assembly to the B pillar and press the clip in place.
3. Fit and tighten 1 bolt fixing the B pillar upper trim panel to the body, and fit the screw cover.
4. Locate the B pillar lower trim panel to the lower end of the B pillar upper trim panel, and press the clip in place.
5. Fix the seat belt to the body, fit 1 bolt, tighten it to **35-45Nm** , and check the torque.
6. Fit the door sill trim panel assembly.

☞ **Door Sill Trim Panel Assembly Refit**

7. Fit the door weatherstrips on both sides of the B pillar upper trim panel assembly.

B Pillar Lower Trim Panel

Remove

1. Pull open the door weatherstrips on both sides of the B pillar lower trim panel assembly.
2. Pry off the clip at the joint of door sill trim panel and B pillar lower end.
3. Pry open the retaining clip of the B pillar lower trim panel, and remove the B pillar lower trim panel assembly.

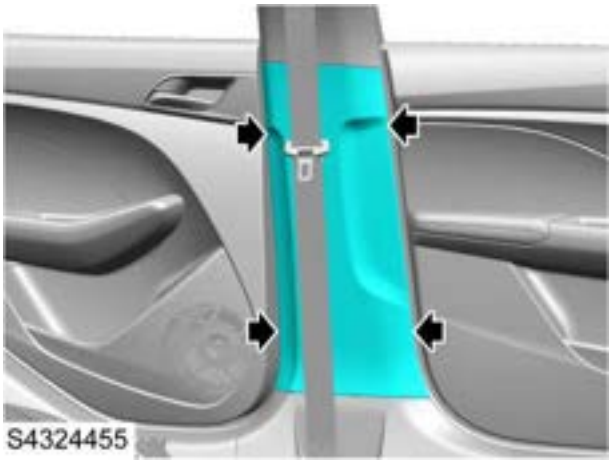

Refit

1. Locate the B pillar lower trim panel assembly on the B pillar, and fit the clip in place.
2. Fit the retaining clip at the joint between the door sill trim panel and the lower end of B pillar in place.
3. Fit the door weatherstrips on both sides of the B pillar lower trim panel assembly.

C Pillar Upper Trim Panel

Remove

1. Fold the rear seat back downwards.
2. Pull open the rear door frame weatherstrips.
3. Remove the C pillar lower trim panel.

C Pillar Lower Trim Panel Remove

4. Remove the rear parcel shelf luggage cover.

Rear Parcel Shelf Luggage Cover Remove

5. Remove 2 bolts fixing the rear seat belts on both sides to the body.

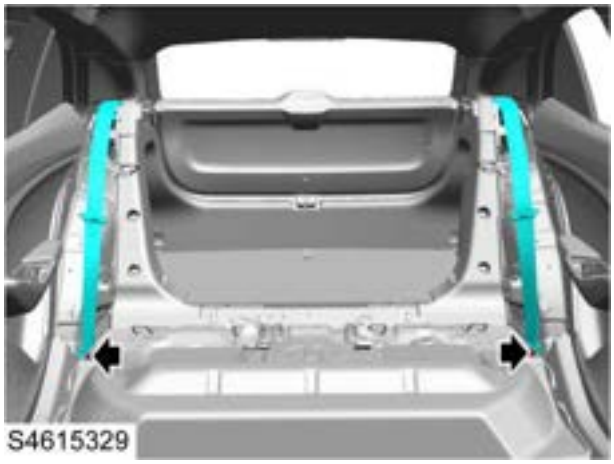

6. Pry off the clips fixing the trunk side trim panel to the C pillar upper trim panel, and carefully pry off the retaining clips along the edge of the C pillar upper trim panel.

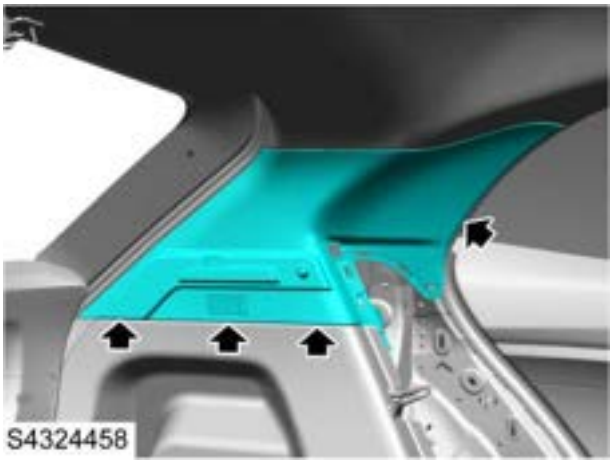

7. Pass the rear seat belts on both sides through the seat belt trim frame, and remove the C pillar upper trim panel.

Refit

1. Pass the rear seat belts on both sides through the seat belt frame.
2. Connect the negative battery cable, fit the C pillar upper trim panel to the body, and ensure that the clips are fitted in place.
3. Fix the upper clips of the trunk side trim panel to the C pillar upper trim panel, and ensure that the clips are fitted in place.
4. Fit 2 bolts fixing the rear seat belts on both sides to the body, tighten them to **35-45Nm** , and check the torque.
5. Fit the rear parcel shelf luggage cover.

Rear Parcel Shelf Luggage Cover Refit

6. Fit the C pillar lower trim panel.

C Pillar Lower Trim Panel Refit

7. Fit the weatherstrips of the rear door frame in place.
8. Connect the negative battery cable.

C Pillar Lower Trim Panel

Remove

1. Pull up the rear door body side weatherstrip.
2. Remove the rear seat back.

Rear Seat Backrest Remove

3. Carefully pry open the retaining clip on the C pillar lower trim panel and remove the C pillar lower trim panel.

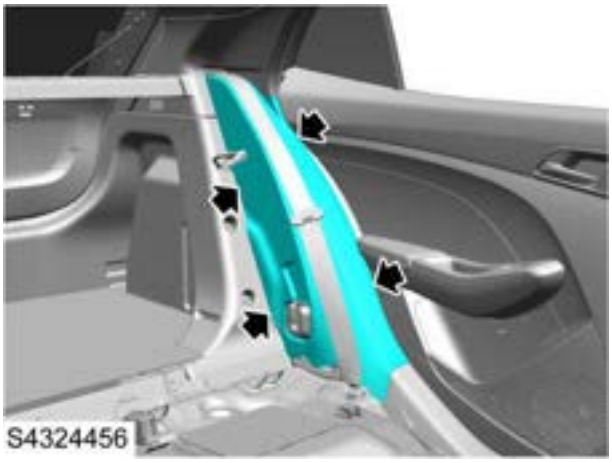

Refit

1. Fit the D pillar lower trim panel to the body, and ensure that the clip is fitted in place.
2. Fit the rear seat back.

Rear Seat Backrest Refit

3. Fit the weatherstrips of the rear door frame in place.

Door Sill Trim Panel

Remove

1. Pull open the front and rear door weatherstrips at the door sill trim panel.
2. Pry open the clip at the joint of door sill trim panel and lower end of C pillar lower trim panel.
3. Loosen the clips, pass the front seat belt through the door sill trim panel, and remove the door sill trim panel assembly.

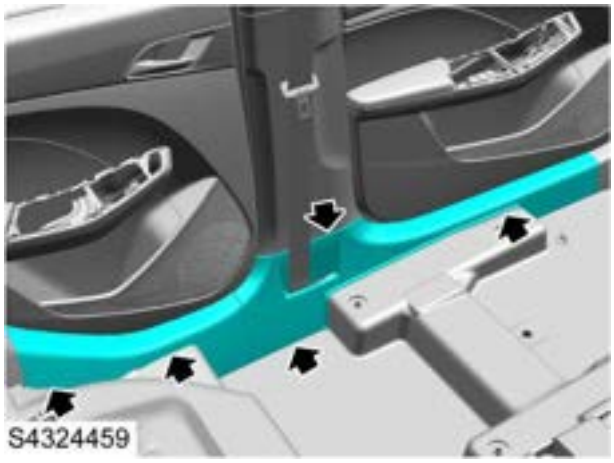

Refit

1. Pass the front seat belt through the door sill trim panel, and secure the frame by pressing the clips in place.
2. Locate the door sill trim panel to the mounting position, and press the clips in place.
3. Fit the clip at the junction between the door sill trim panel and the lower end of D pillar lower trim panel in place.
4. Fit the front and rear door weatherstrips.

Sunvisor

Remove

1. Flip down the sun visor, and remove the trim cover of the sun visor screw.

S4324460

2. Remove 2 screws fixing the sun visor to the roof trim panel and remove the sun visor from the sun visor bracket.

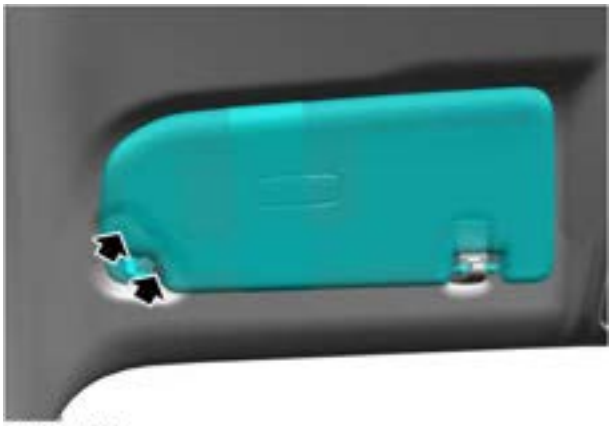

S4324461

3. Pry open the trim cover of the sun visor bracket screw and the clip fixing the sun visor bracket to the roof interior trim panel, and remove the sun visor bracket.

S4324462

Refit

1. Align the adapter of the sun visor bracket to the adapter of the roof interior trim panel, push it hard to the end and fasten it, and fit the screw cover.
2. Fix one end of the sun visor to the sun visor bracket and the other end to the roof interior trim panel, fit and tighten 2 screws.
3. Fit the sun visor screw cover, and restore the sun visor.

Roof Interior Trim

Remove

1. Disconnect the negative battery cable and fold down the seat back.
2. Remove the A pillar upper trim panel assembly.

A Pillar Upper Trim Panel Assembly Remove

3. Remove the sun visor assembly.

Sun Visor Assembly Remove

4. Remove the B pillar upper trim panel assembly.

B Pillar Upper Trim Panel Assembly Remove

5. Remove the C pillar upper trim panel assembly.

C Pillar Upper Trim Panel Assembly Remove

6. Fit the inner roof handle.

Inner Roof Handle Remove

7. Remove the vanity mirror lamp (if equipped).

Vanity Mirror Lamp Remove

8. Remove the front reading lamp (if equipped).

Front Reading Lamp Remove

9. Remove the rear reading lamp (if equipped).

Rear Reading Lamp Remove

10. Remove the microphone (if equipped).

Microphone Remove

11. Release the retaining clip, and carefully remove the headliner from the tailgate.

Refit

1. Locate the roof interior trim panel to the body, and press the clip in place.
2. Fit the microphone (if equipped).

Microphone Refit

3. Fit the rear reading lamp (if equipped).

Rear Reading Lamp Refit

4. Fit the front reading lamp (if equipped).

Front Reading Lamp Refit

5. Fit the vanity mirror lamp (if equipped).

Vanity Mirror Lamp Refit

6. Fit the inner roof handle.

Inner Roof Handle Refit

7. Fit the C pillar upper trim panel assembly.

C Pillar Upper Trim Panel Assembly Refit

8. Fit the B pillar upper trim panel assembly.

B Pillar Upper Trim Panel Assembly Refit

9. Fit the sun visor assembly.

Sun Visor Assembly Refit

10. Fit the A pillar upper trim panel assembly.

A Pillar Upper Trim Panel Assembly Refit

11. Restore the seat adjustment and connect the negative battery cable.

Inner Roof Handle

Remove

1. Pry off the clip trim cover on the inner roof handle.
2. Pry off 2 clips fixing the inner roof handle to the body.

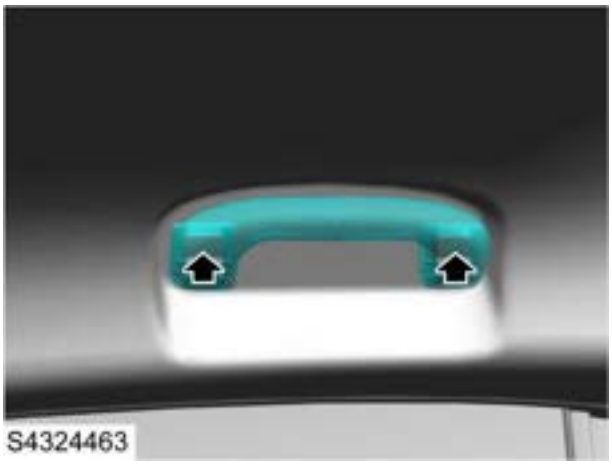

3. Remove the inner roof handle.

Refit

1. Put the inner roof handle in the correct position, and press the clips in place.
2. Fit the clip covers.

Trunk Side Trim Panel

Remove

1. Open the tailgate, and remove the trunk carpet.
2. Remove the trunk sill trim panel.

Trunk Sill Trim Panel Remove

3. Remove the C pillar lower trim panel.

C Pillar Lower Trim Panel Remove

4. Remove the clip fixing the trunk right (left) trim panel to the body and remove the trunk right (left) trim panel assembly.

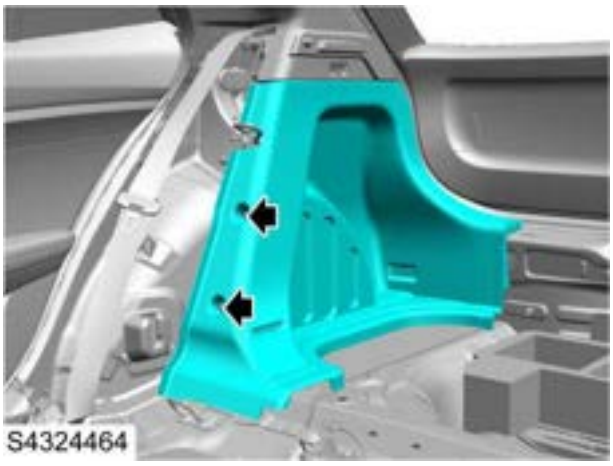

Refit

1. Locate the left trunk side trim panel to the trunk, and snap it into place.
2. Fit the C pillar lower trim panel.

C Pillar Lower Trim Panel Refit

3. Fit the trunk sill trim panel.

Trunk Sill Trim Panel Refit

4. Fit the trunk carpet, and close the tailgate.

Trunk Sill Trim Panel

Remove

1. Open the tailgate, and remove the trunk carpet.
2. Pry up some trunk weatherstrips, release the clip and remove the trunk sill trim panel.

Refit

1. Locate the trunk sill trim panel to the body, snap it into place, and restore part of the trunk weatherstrips.
2. Fit the trunk carpet, and close the tailgate.

Tail Gate Interior Trim Panel

Remove

1. Open the tailgate, and remove the lock sleeve.
2. Pry open the trim cover of the tailgate lower trim panel screw, and remove 1 screw fixing the tailgate trim panel to the tailgate.

S4324466

3. Pry open the retaining clip, and remove the tailgate trim panel.

S4324467

Refit

1. Locate the tailgate trim panel to the tailgate, and press the clip in place.
2. Fit and tighten 1 screw fixing the tailgate trim panel to the tailgate.
3. Fit the tailgate trim panel screw cover, and press the clip in place.
4. Fit the lock sleeve, and close the tailgate.

Carpet

Remove

1. Disconnect the negative battery cable.
2. Remove the front seat assembly.

Front Seat Assembly Remove

3. Remove the centre console assembly.

Centre Console Assembly Remove

4. Remove the door sill trim panel assembly.

Door Sill Trim Panel Assembly Remove

5. Remove the A pillar lower trim panel.

A Pillar Lower Trim Panel Remove

6. Remove the rear seat cushion assembly.

Rear Seat Cushion Assembly Remove

7. Loosen the carpet retaining clip, disconnect the harness connector, and remove the carpet.

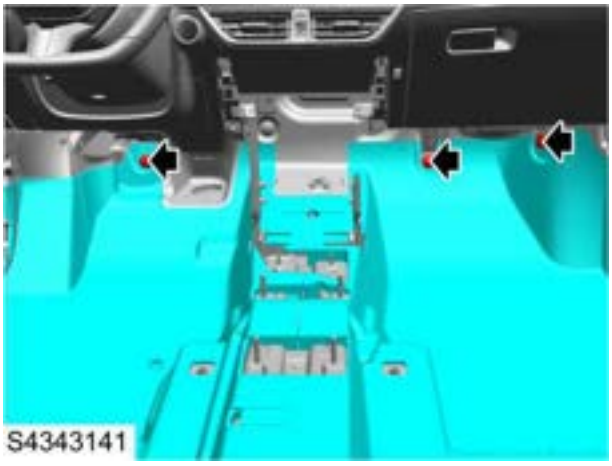

Refit

1. Arrange the carpet in the vehicle, connect the harness connector and fix it with clips.
2. Fit the rear seat cushion assembly.

Rear Seat Cushion Assembly Refit

3. Fit the A pillar lower trim panel.

A Pillar Lower Trim Panel Refit

4. Fit the door sill trim panel assembly.

Door Sill Trim Panel Assembly Refit

5. Fit the centre console assembly.

Centre Console Assembly Refit

6. Fit the front seat assembly.

Front Seat Assembly Refit

7. Connect the negative battery cable.

Dash Panel Inner Sound Insulation Pad

Remove

1. Disconnect the negative battery cable.
2. Remove the A/C distribution box assembly.

A/C Distribution Box Assembly Remove

3. Remove the body harness in the front compartment, so that it gets out of the front insulation pad hole.

Body Harness Remove

4. Remove the upper steering column assembly.

Upper Steering Column Assembly Remove

5. Remove the brake pedal assembly.

Brake Pedal Assembly Remove

6. Remove the accelerator pedal assembly.

Accelerator Pedal Assembly Remove

7. Remove the clutch pedal (if equipped).

Clutch Pedal

8. Remove the body control module.

Body Control Module Remove

9. Remove the A pillar lower trim panel.

A Pillar Lower Trim Panel Remove

10. Remove the door sill trim panel.

Door Sill Trim Panel Remove

11. Remove the gear shift mechanism - manual (if equipped).

Gear Shift Mechanism - Manual

12. Remove the gear shift mechanism - automatic (if equipped).

Gear Shift Mechanism - Automatic

13. Remove 1 plastic nut fixing the carpet to the body, and lift the front part of the carpet.

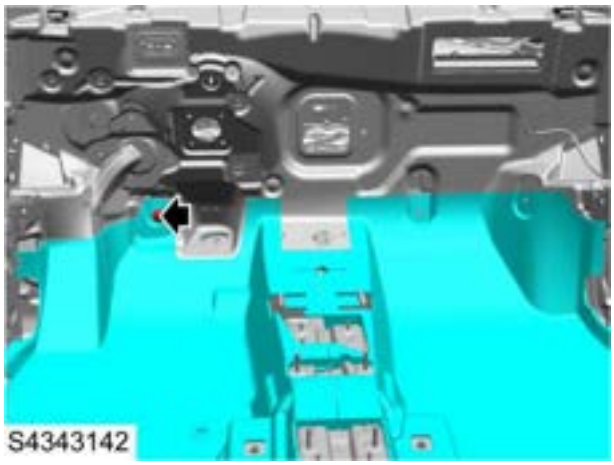

14. Pry off the clips, disconnect the rear window washer pump hose from the rear window washer middle connecting hose.

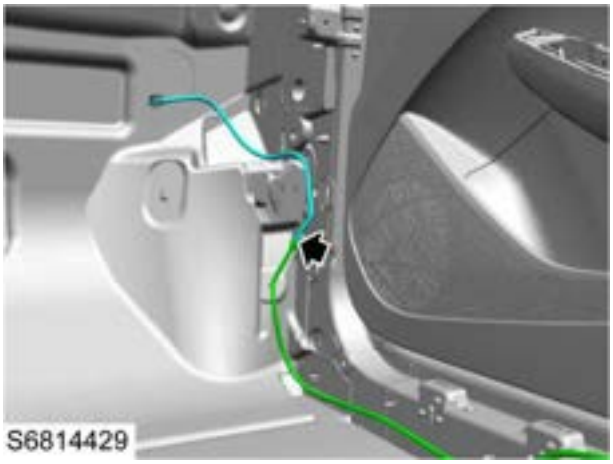

15. Pry off the harness clips, disconnect the harness connector, and pull the harness out of the holes in the dash panel.
16. Remove 7 plastic nuts fixing the dash panel insulation pad to the body, and remove the dash panel insulation pad.

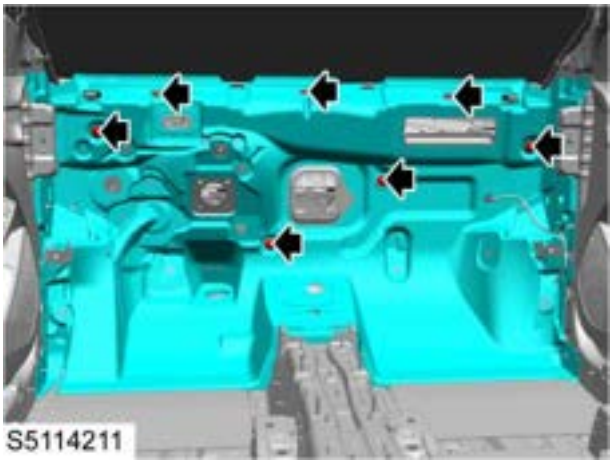

Refit

1. Locate the dash panel insulation pad to the body, fit and tighten 7 plastic nuts.
2. Pass the harness through the holes in the dash panel, connect the harness connector, and secure it with clips.
3. Connect the rear window washer middle connecting hose to the rear window washer pump hose and ensure a reliable connection.
4. Restore the front part of the carpet, fit and tighten 1 plastic nut.
5. Pass the front compartment lid release cable and sunroof drain pipe through the holes in the dash panel, and secure them with clips.
6. Fit the gear shift mechanism - automatic.

Gear Shift Mechanism - Automatic

7. Fit the gear shift mechanism - manual.

Gear Shift Mechanism - Manual

8. Fit the door sill trim panel.

Door Sill Trim Panel Refit

9. Fit the body control module.

Body Control Module Refit

10. Fit the clutch pedal (if equipped).

Clutch Pedal

11. Fit the accelerator pedal assembly.

Accelerator Pedal Assembly Refit

12. Fit the brake pedal assembly.

Brake Pedal Assembly Refit

13. Fit the upper steering column assembly.

Upper Steering Column Assembly Refit

14. Fit the body harness in the front compartment, so that it passes through the front insulation pad hole.

Body Harness Refit

15. Fit the A pillar lower trim panel.

A Pillar Lower Trim Panel Refit

16. Fit the A/C distribution box assembly.

A/C Distribution Box Assembly Refit

17. Connect the negative battery cable.

Remove

1. Disconnect the negative battery cable.
2. Remove the master cylinder far-end reservoir assembly.

☞**Master Cylinder Far-end Reservoir Assembly Remove - Far-end** **Remove - Near-end**

3. Pry off the clips fixing the front compartment harness to the auxiliary bulkhead sound insulation pad.
4. Remove 3 clips fixing the auxiliary bulkhead sound insulation pad to the front body.

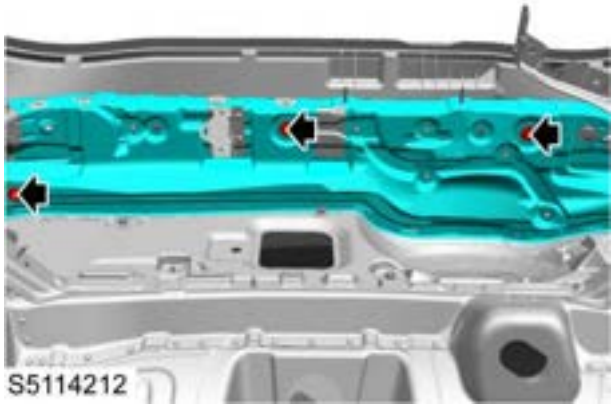

5. Loosen the harness clips, and remove the auxiliary bulkhead sound insulation pad.

Refit

1. Locate the auxiliary bulkhead sound insulation pad to the body, and fit and tighten 3 clips.
2. Fit and press the clip fixing the front compartment harness to the body.
3. Fit the master cylinder far-end reservoir assembly.

☞**Master Cylinder Far-end Reservoir Assembly Refit - Far End** **Refit - Near End**

4. Connect the negative battery cable.

Remove

1. Disconnect the negative battery cable.
2. Remove the A/C box assembly.

☞A/C Box Assembly Remove

3. Remove the brake booster assembly.

☞Booster Assembly

4. Remove the front evaporator pipe assembly.

☞Front Evaporator Pipe Assembly Remove

5. Remove 8 clips fixing the insulation pad of the engine compartment heat shield to the front body.

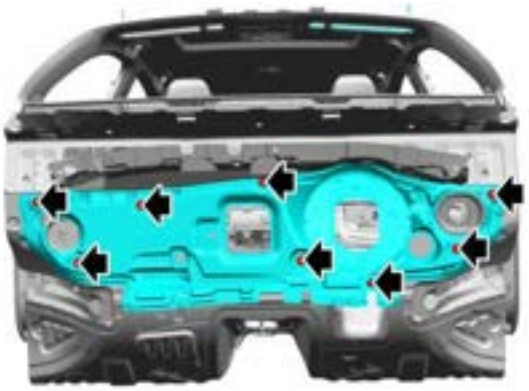

S5114213

6. Loosen the harness clips, and remove the insulation pad of the engine compartment heat shield.

Refit

1. Fix the insulation pad of the engine compartment heat shield to the front body, and align the mounting holes.
2. Pass the harness through insulation pad and secure it with clips.
3. Fix the insulation pad of the engine compartment heat shield to the front body, fit and tighten 8 clips.
4. Fit the front evaporator pipe assembly.

☞Front Evaporator Pipe Assembly Refit

5. Fit the vacuum booster assembly

☞Vacuum Booster Assembly

6. Fit the A/C box assembly.

☞A/C Box Refit

7. Connect the negative battery cable.

Trunk Cover

Remove

1. Open the tailgate.
2. Remove 2 ropes of the rear parcel shelf on the tailgate.

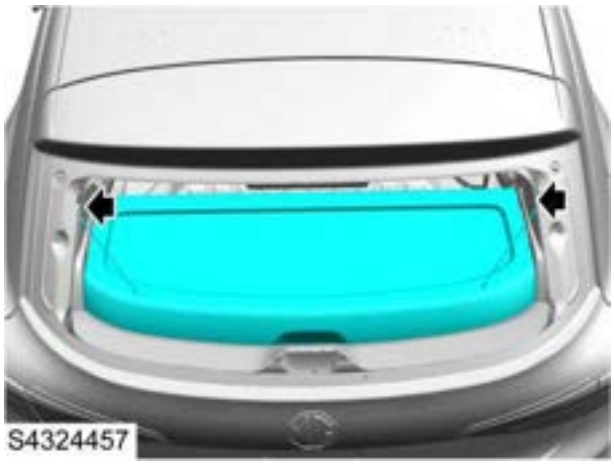

3. Lift the rear parcel shelf to separate it from the retaining slot, pull out and remove the rear parcel shelf.

Refit

1. Insert the tail end of the rear parcel shelf into the slot of the trunk cover support plate assembly and push it in place.
2. Hang 2 slings on the tailgate.
3. Close the tailgate.

Stationary Windows

Service Guide

Windscreen

Remove

1. Remove the A/C air inlet grille assembly.

A/C Air Inlet Grille Side Corner, Panel and Accessories Remove

2. Remove the interior rearview mirror.

Manual Anti-dazzle Interior Rearview Mirror Assembly Remove - Manual

3. Remove the A pillar upper trim panel assembly.

A Pillar Upper Trim Panel Assembly Remove

4. Put suitable coverings inside and outside the vehicle to prevent scratches.
5. Put 2 suction cups symmetrically on both sides of the front windscreen (outside).
6. Drill a hole in the adhesive, pass a cutting rope through or use a cutter directly to cut the adhesive on the glass and surroundings.
7. Remove the front windscreen with suckers on both sides aided by an assistant.
8. To refit, clean the adhesive on the original front windscreen and the vehicle body.

Refit

1. Thoroughly clean the mounting position of the front windscreen on the body and the front windscreen with cleaner.
2. Apply glass primer to the body assembly area of the windshield.
3. Apply adhesive to the windscreen assembly, and press the front windscreen into the front windscreen frame with suction cups.
4. Fix the front windscreen to the front windscreen frame with tapes, and let the adhesive dry for 24 hours, and remove the tapes.
5. Pour the water on the front windscreen assembly, and check for leak. If any leak is found, dry the front windscreen assembly and block the leaking location with adhesive. If it still leaks, remove the front windscreen assembly and repeat the entire repair procedure.
6. Fit the A pillar upper trim panel assembly.

A Pillar Upper Trim Panel Assembly Refit

7. Fit the interior rearview mirror.

Manual Anti-dazzle Interior Rearview Mirror Assembly Refit - Manual

8. Fit the A/C air inlet grille assembly.

A/C Air Inlet Grille Side Corner, Panel and Accessories Refit

Rear Window

Remove

1. Disconnect the negative battery cable.
2. Remove the rear window wiper arm assembly (if equipped).

☞ Rear Window Wiper Arm Assembly Remove

3. Put suitable coverings inside and outside the vehicle to prevent scratches.
4. Put 2 suction cups symmetrically on both sides of the rear window (outside).
5. Drill a hole in the adhesive, pass a cutting rope through or use a cutter directly to cut the adhesive on the glass and surroundings.
6. Remove the rear window with suction cups on both sides aided by an assistant.
7. To refit, clean the adhesive on the original rear window and the vehicle body.

Refit

1. Thoroughly clean the mounting position of the rear window on the body and the rear window with cleaner.
2. Apply glass primer to the body assembly area of the rear window.
3. Apply adhesive to the rear window assembly, and press the rear window into the rear window frame with suction cups.
4. Fix the rear window to the rear window frame with tapes, and let the adhesive dry for 24 hours, and remove the tapes.
5. Pour the water on the rear window assembly, and check for leak. If any leak is found, dry the rear window assembly and block the leaking location with adhesive. If it still leaks, remove the rear window assembly and repeat the entire repair procedure.
6. Fit the rear window wiper arm assembly (if equipped).

☞ Rear Window Wiper Arm Assembly Refit

7. Connect the negative battery cable.

Bumpers and Fascias

Specification

Torque

Description	Value
Bolt-The front bumper bracket to the wing side	3-4Nm
Bolt-Upper bracket to front end module	3-4Nm
Bolt-Front bumper to upper bracket	3-4Nm
Bolt-Front bumper to Headlamp	3-4Nm
Bolt-Front bumper to Bottom diversion plate	4-6Nm
Bolt/Nut-Front buffer beam to body	40-50Nm
Nut-Front hach lock bracket to Front buffer beam	19-25Nm
Nut-Rear bumper bracket to body	3-4Nm
Bolt-Rear bumper to bottom diversion plate	3-4Nm
Bolt-rear buffer beam support to body	19-25Nm

Service Guide

Front Bumper

Remove

1. Disconnect the negative battery cable.
2. Remove 1 screw (1) fixing the front bumper to the left/right fender.
3. Remove 4 screws (2) fixing the front bumper to the left and right wheelhouse liners.
4. Remove 2 screws (3) fixing the front bumper to the bottom deflector.

5. Remove 6 bolts fixing the front bumper bottom to the front bumper beam.

6. Remove 2 bolts (1) fixing the front bumper to the headlamp assembly and 4 bolts (2) fixing the front bumper to the front bumper upper support.

7. With assistance, lift both sides of the front bumper carefully and pull it outward, release the retaining clips, and separate the front bumper from the brackets on both sides of the body.
8. Disconnect the harness connector, and remove the front bumper.
9. Remove 4 bolts fixing the front bumper upper support to the front-end module, and remove the front bumper upper support.

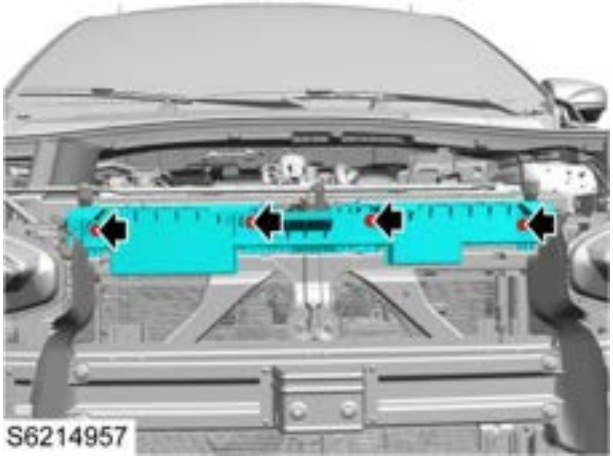

10. Remove the front bumper side bracket.
    a. Remove the headlamp assembly.

☞ **Headlamp Assembly Remove**

    b. Remove 2 bolts fixing the front bumper left (right) bracket to the fender, and remove the front bumper left (right) bracket.

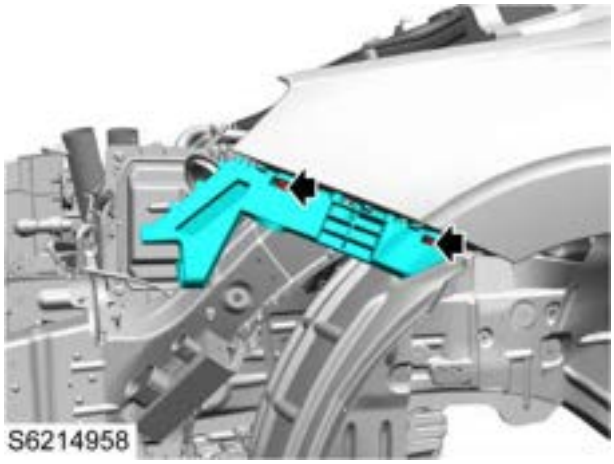

11. If necessary, remove 3 screws fixing the front view camera to the front bumper, and remove the front view camera (if equipped).
12. If necessary, remove 8 screws fixing the front fog lamp to the front bumper, and remove the front fog lamp (if equipped).

Refit

1. If removed, fit and tighten 8 screws fixing the front fog lamp to the front bumper.
2. If removed, fit and tighten 3 screws fixing the front view camera to the front bumper.
3. Fit the front bumper side bracket.
   a. Fix the left (right) bracket of the front bumper to the fender, fit 2 bolts, tighten them to **3-4Nm** , and check the torque.
   b. Fit the headlamp assembly.

☞ **Headlamp Assembly Refit**

4. Fit the harness clip, and fit 4 bolts fixing the front bumper upper bracket to the front-end module, tighten them to **3-4Nm** , and check the torque.
5. With assistance, locate the front bumper to the body, connect the harness connector, and press the clip in place.
6. Fit 4 bolts fixing the front bumper to the upper bracket, tighten them to **3-4Nm** , and check the torque.
7. Fit 2 bolts fixing the front bumper to the headlamp, tighten them to **3-4Nm** , and check the torque.
8. Fit 6 bolts fixing the bottom of front bumper to the bottom deflector, tighten them to **4-6Nm** , and check the torque.
9. Fit and tighten 4 screws fixing the front bumper to the bottom deflector.
10. Fit and tighten 4 screws fixing the front bumper to the left (right) front wheelhouse liner.
11. Fit and tighten 1 screw fixing the front bumper to the right (left) fender.
12. Connect the negative battery cable.

Remove

1. Remove the front bumper.

Front Bumper Remove

2. Remove the wind scooper.

Wind Scooper Remove

3. Remove the transmission oil cooler assembly.

Transmission Oil Cooler Assembly

4. Remove the horn.

Horn Remove

5. Remove the front compartment lock.

Front Compartment Lock Remove

6. Remove 2 bolts (1) and 2 nuts (2) fixing the front bumper beam bracket to the front bumper beam and the upper radiator beam, and remove the front bumper beam bracket.

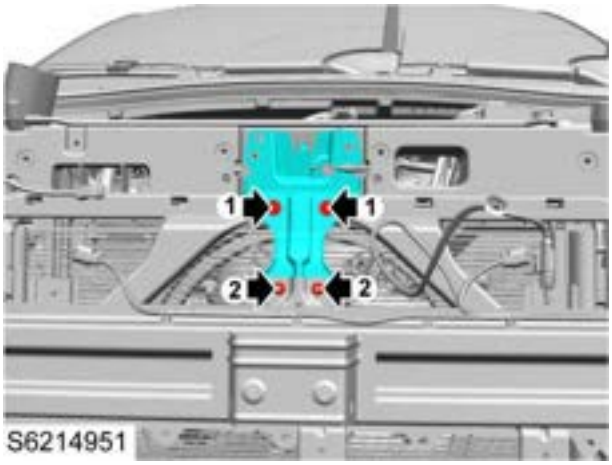

7. Remove 4 bolts fixing the front bumper beam to the left (right) side of the body.
8. Remove 3 bolts fixing the front bumper beam to the left (right) side of the front-end module, and remove the front bumper beam.

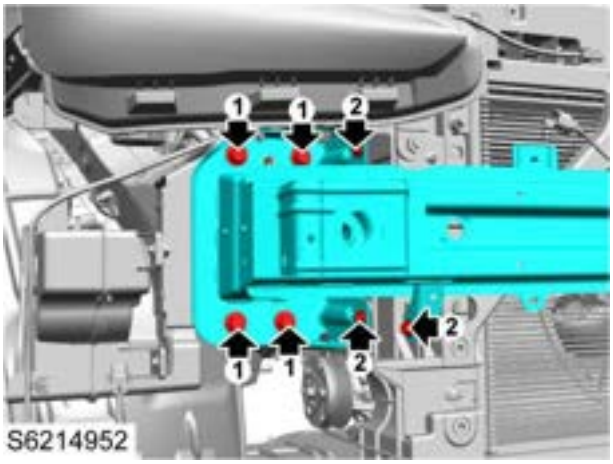

Refit

1. Locate the front bumper beam to the body, fit 7 bolts fixing the front bumper beam to the body and the front-end module, tighten them to **40-50Nm** , and check the torque.
2. Fit 2 bolts and 2 nuts fixing the front compartment bracket to the front bumper beam and the front-end module, tighten them to **19-25Nm** , and check the torque.
3. Fit the front compartment lock.

Front Compartment Lock Refit

4. Fit the transmission oil cooler assembly.

Transmission Oil Cooler Assembly

5. Fit the wind scooper.

Wind Scooper Refit

6. Fit the horn.

Horn Refit

7. Fit the front bumper.

Front Bumper Refit

Rear Bumper
Remove

1. Disconnect the negative battery cable, and open the tailgate.
2. Remove the tail lamp assembly.

☞Tail Lamp Assembly Remove

3. Remove 1 screw (1) fixing the rear bumper to the rear fender.
4. Remove 2 screws (2) fixing the rear bumper to the right/left wheelhouse liners.
5. Remove 1 screw (3) fixing the rear bumper to the rear bumper side bracket.

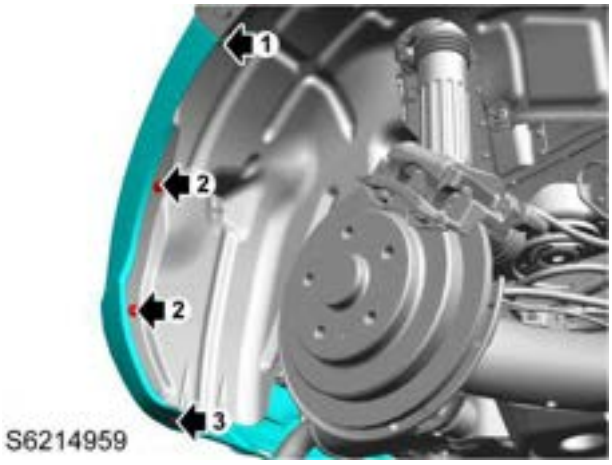

6. Remove 2 bolts fixing the rear bumper to the rear bumper bracket.

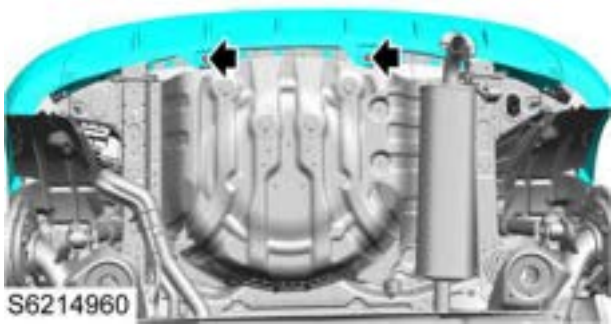

7. Pry off the trim cover, and remove 1 screw (1) fixing the rear bumper left (right) side to the body, and pry off 1 clip (2).

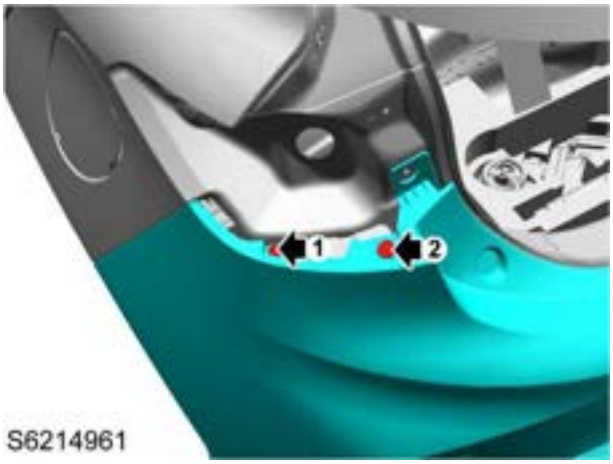

8. With assistance, release the retaining clips, remove the rear bumper assembly, and disconnect the harness connector.
9. Remove 2 screws (1) and 2 nuts (2) fixing the rear bumper left/right brackets to the body, and remove the rear bumper side brackets.

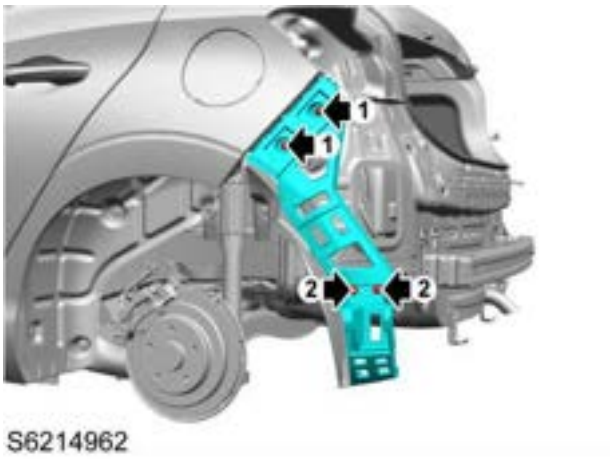

Refit

1. Fix the rear bumper left (right) side bracket to the body, fit 2 screws and 2 nuts, tighten them to **3-4Nm** , and check the torque.
2. With assistance, locate the rear bumper to the body, connect the harness connector, and press the clip in place.
3. Fit and tighten 2 screws fixing the rear bumper to the body, and press 2 clips in place.
4. Fit 2 bolts fixing the rear bumper to the rear bumper bracket, tighten them to **3-4Nm** , and check the torque.
5. Fit and tighten 1 screw fixing the rear bumper to the rear bumper side bracket.
6. Fit and tighten 2 screws fixing the rear bumper to the left (right) wheelhouse liner.
7. Fit and tighten 1 screw fixing the rear bumper to the rear fender.
8. Fit the rear tail lamp assembly.

☞Rear Tail Lamp Assembly Refit

9. Connect the negative battery cable, and close the tailgate.

Remove

1. Remove the rear bumper assembly.

Rear Bumper Assembly Remove

2. Remove 6 bolts (1) and 2 nuts (2) fixing the rear bumper beam to the rear body.

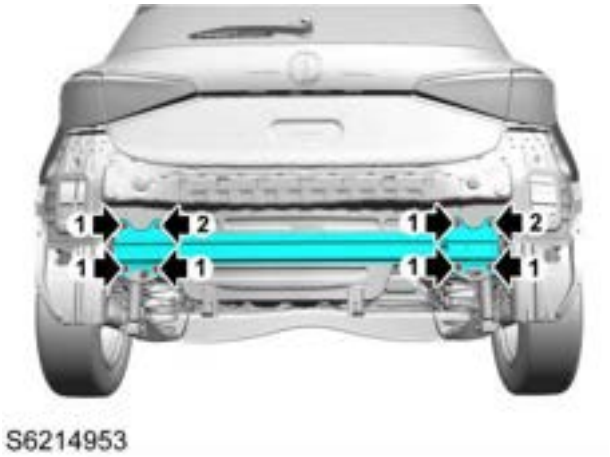

3. With assistance, remove the rear bumper beam.

Refit

1. Locate the rear bumper beam to the body, fit 6 bolts and 2 nuts, tighten them to **19-25Nm** , and check the torque.
2. Fit the rear bumper assembly.

Rear Bumper Assembly Refit

Body Exterior Parts

Specification

Torque

Description	Value
Bolt-Air conditioning air intake grille to body	2-3Nm
Bolt-front wheelarch liner to rear bumper	2-4Nm
Nut-Bottom diversion plate to body	4-6Nm
Bolt-front Bottom diversion plate to front end module	4-6Nm

Service Guide

A/C Air Inlet Grille Panel and Accessories

Remove

1. Open the bonnet.
2. Release the clips at the side corners of the A/C air inlet grille, and remove the side corners.

3. Remove the side water retaining block (1) of the A/C air inlet grille assembly.
4. Remove 2 bolts (2) fixing the A/C air inlet grille panel seal to the body.
5. Remove 2 split pins (3) fixing the A/C air inlet grille panel seal to the body.

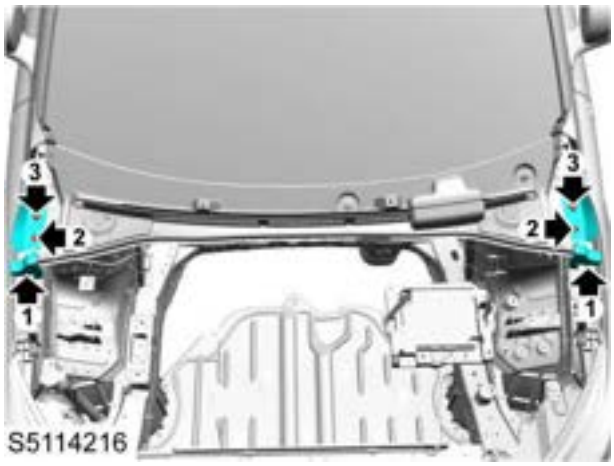

6. Remove the rear bonnet weatherstrips from the A/C air inlet grille assembly.

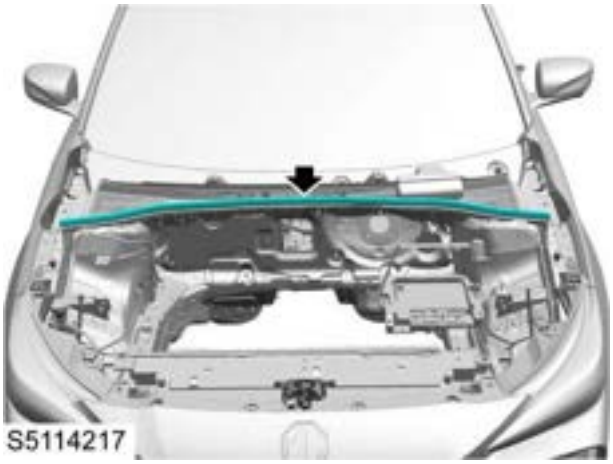

7. Remove the windscreen wiper arm assembly.

☞ **Windscreen Wiper Arm Assembly Remove**

8. Remove 5 clips fixing the A/C air inlet grille to the body, and loosen the clips on the A/C air inlet grille.

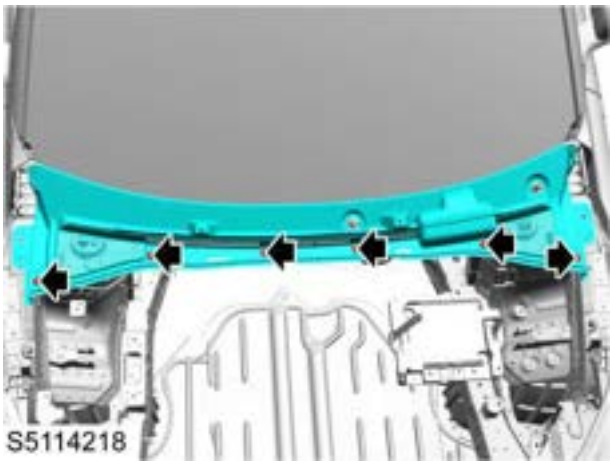

9. Disconnect the windscreen washer nozzle hose from the windscreen washer hose and remove the A/C air inlet grille.

10. If necessary, disconnect the washer nozzle hose from the nozzle, and remove the nozzle and washer nozzle hose.

S6814430

Refit

1. Fit the nozzle and to the A/C air inlet grille assembly and connect the windscreen washer nozzle hose and nozzle.
2. Connect the windshield washer pump hose and the windshield washer nozzle hose.
3. Locate the A/C air inlet grille to the body, fit 6 clips fixing the A/C air inlet grille to the body, and fix them in place.
4. Fit the windscreen wiper arm assembly.

☞ **Windscreen Wiper Arm Assembly Refit**

5. Fit the rear bonnet weatherstrip, and ensure that it is fixed in place.
6. Fit the water retaining block of the A/C air inlet grille, and ensure that it is fixed in place.
7. Fit 2 split pins fixing the seal to the body, and ensure that they are fixed in place.
8. Fit 2 bolts fixing the seal to the body, tighten them to **2-3Nm** , and check the torque.
9. Fit the A/C air inlet grille side corner and ensure that the clip is fitted in place.
10. Close the bonnet.

Front Wheelhouse Liner Assembly

Remove

1. If necessary, lift the vehicle, and remove the tyre or adjust its position.
2. Remove the front wheelhouse liner - low configuration.
   a. Remove 6 screws (1) fixing the front left wheelhouse liner to the front bumper.
   b. Remove 1 bolt (2) fixing the front left wheelhouse liner to the bottom deflector.
   c. Remove 3 bolts (3) fixing the front left wheelhouse liner to the body.
   d. Remove 5 clips (4) fixing the front left wheelhouse liner to the body.
   e. Remove 2 clip (5) fixing the front left wheelhouse liner to the front fender.

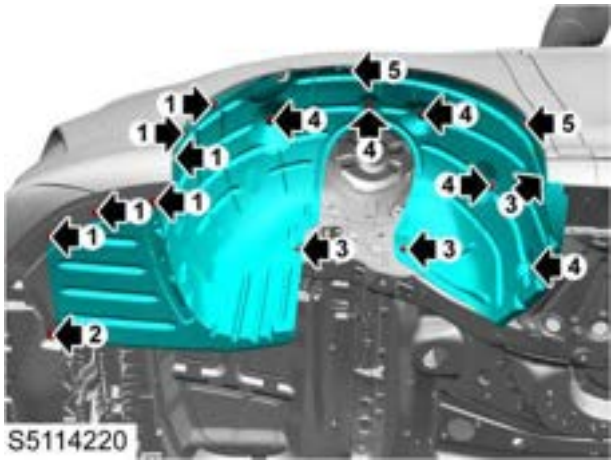

   f. Remove 4 screws (1) fixing the front right wheelhouse liner to the front bumper.
   g. Remove 3 screws (2) fixing the front right wheelhouse liner to the bottom deflector.
   h. Remove 3 bolts (3) fixing the front right wheelhouse liner to the body.
   i. Remove 5 clips (4) fixing the front right wheelhouse liner to the body.
   j. Remove 2 clips (5) fixing the front right wheelhouse liner to the front fender.

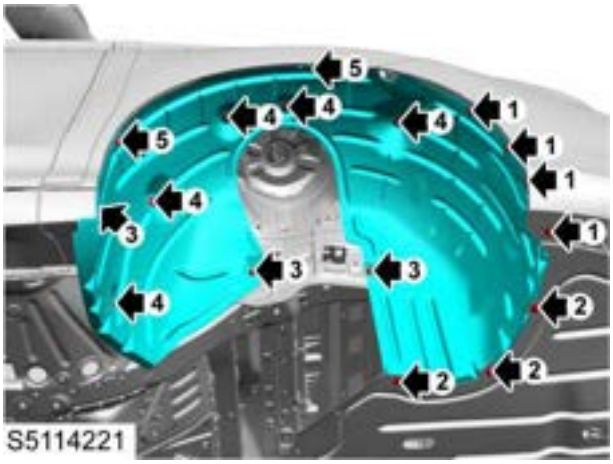

3. Remove the front wheelhouse liner - high configuration.
   a. Remove 4 screws (1) fixing the front left wheelhouse liner to the front bumper.
   b. Remove 3 screws (2) fixing the front left wheelhouse liner to the bottom deflector.
   c. Remove 3 bolts (3) fixing the front left wheelhouse liner to the body.
   d. Remove 5 clips (4) fixing the front left wheelhouse liner to the body.
   e. Remove 2 clip (5) fixing the front left wheelhouse liner to the front fender.

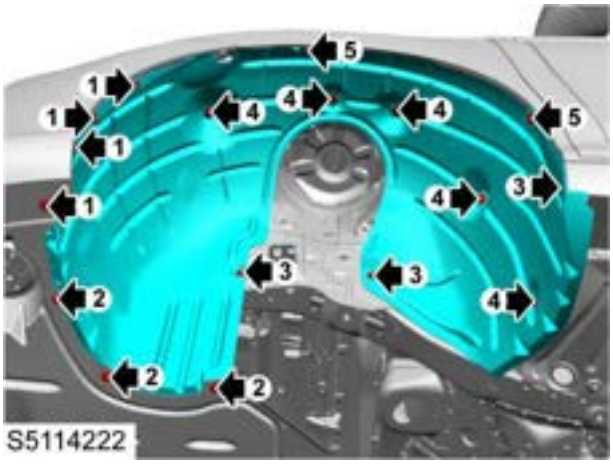

   f. Remove the front right wheelhouse liner as described above.

Refit

1. Fit the front wheelhouse liner - high configuration.
   a. Fix the front left wheelhouse liner to the body and align it with the mounting hole.
   b. Fit and tighten 2 clips fixing the left front wheelhouse liner to the front fender.
   c. Fit 5 clips fixing the front left wheelhouse liner to the body.
   d. Fit 3 bolts fixing the front left wheelhouse liner to the body, tighten them to **2-4Nm** , and check the torque.

e. Fit and tighten 3 screws fixing the front left wheelhouse liner to the bottom deflector.

f. Fit and tighten 4 screws fixing the front left wheelhouse liner to the front bumper.

g. Fit the front right wheelhouse liner as described above.

2. Fit the front wheelhouse liner - low configuration.

a. Fix the front right wheelhouse liner to the body and align it with the mounting hole.

b. Fit and tighten 2 clips fixing the front right wheelhouse liner to the front fender.

c. Fit 5 clips fixing the front right wheelhouse liner to the body.

d. Fit 3 bolts fixing the front right wheelhouse liner to the body, tighten them to **2-4Nm** , and check the torque.

e. Fit and tighten 3 screws fixing the front right wheelhouse liner to the bottom deflector.

f. Fit and tighten 4 screws fixing the front right wheelhouse liner to the front bumper.

g. Fix the front left wheelhouse liner to the body and align it with the mounting hole.

h. Fit and tighten 2 clips fixing the left front wheelhouse liner to the front fender.

i. Fit 5 clips fixing the front left wheelhouse liner to the body.

j. Fit 3 bolts fixing the front left wheelhouse liner to the body, tighten them to **2-4Nm** , and check the torque.

k. Fit and tighten 1 bolt fixing the front left wheelhouse liner to the bottom deflector.

l. Fit and tighten 6 screws fixing the front left wheelhouse liner to the front bumper.

3. If the wheels are removed, fit them and lower the vehicle.

Rear Wheelhouse Liner Assembly

Remove

1. If necessary, raise the vehicle, and remove the tyre.
2. Remove 3 screws (1) fixing the rear left wheelhouse liner to the rear bumper.
3. Remove 4 clips (2) fixing the left rear wheelhouse liner to the body.
4. Remove 4 plastic nuts (3) fixing the rear left wheelhouse liner to the body.

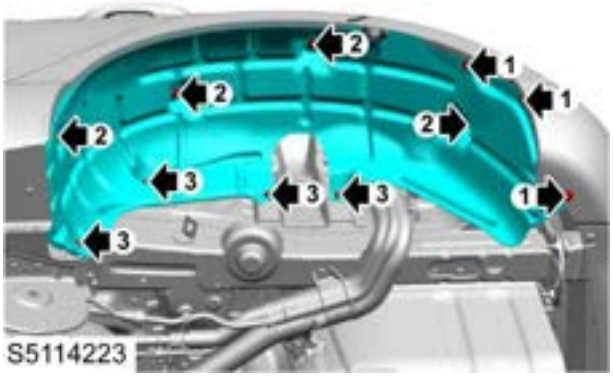

5. Remove the rear right wheelhouse liner as described above.

Refit

1. Fix the rear left wheelhouse liner to the body and align it with the mounting hole.
2. Fit and tighten 4 plastic nuts fixing the rear left wheelhouse liner to the body.
3. Fit and press 4 clips fixing the rear left wheelhouse liner to the body.
4. Fit and tighten 3 screws fixing the rear left wheelhouse liner to the rear bumper.
5. Fit the rear right wheelhouse liner as described above.

Front Quarter Window Trim Cover Assembly

Remove

1. Pry off the clips along the edge of front quarter window trim cover, and remove the front quarter window trim cover.

Refit

1. Locate the front quarter window trim cover to the mounting position, and press the clips in place.

Bottom Deflector

Remove

1. Raise the vehicle.
2. Remove the front bottom deflector.
   a. Remove 6 bolts (1) fixing the front bottom deflector to the front bumper.
   b. Remove 5 bolts (2) fixing the front bottom deflector to the front-end module.

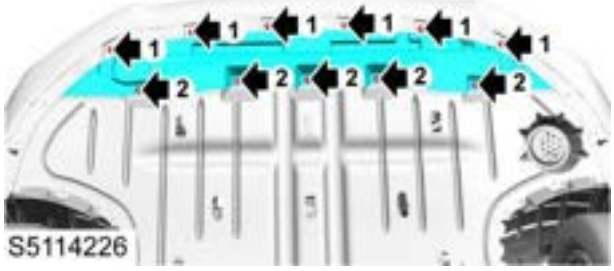

   c. Remove 6 screws (1) fixing the front bottom deflector to the front bumper.
   d. Remove 6 screws (2) fixing the front bottom deflector to the right wheelhouse liner.
   e. Remove 3 screws (3) fixing the front bottom deflector to the front subframe.

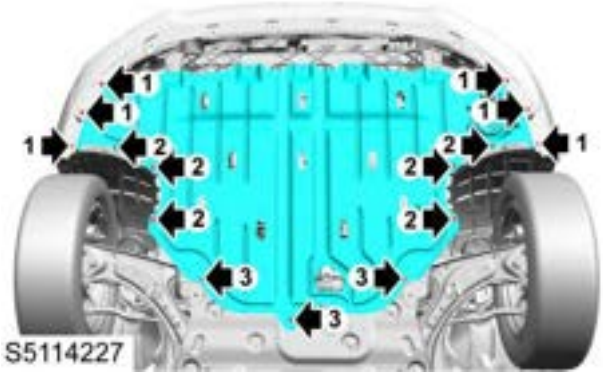

   f. Remove the front bottom deflector in sequence.
3. Remove 28 nuts fixing the middle bottom deflector to the underbody, and remove the middle bottom deflector.

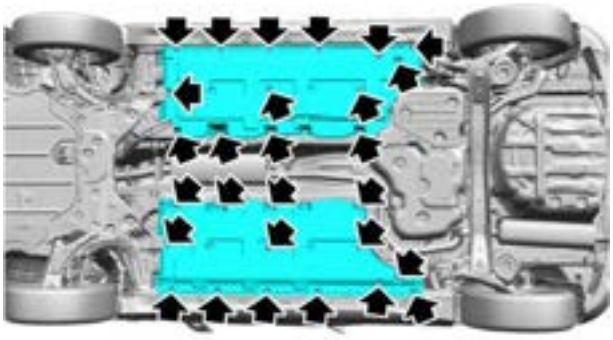

4. Remove 3 circlips fixing the rear bottom deflector to the fuel tank, and remove the rear bottom deflector.

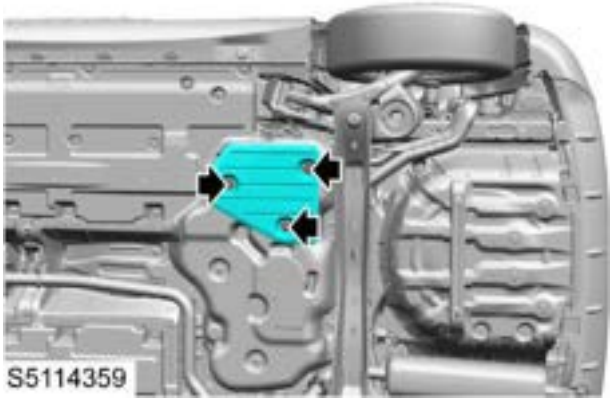

Refit

1. Fix the rear bottom deflector to the mounting position, fit 3 new circlips and make sure they are secure.
2. Fit 28 nuts fixing the middle bottom deflector to the underbody, tighten them to **4-6Nm** , and check the torque.
3. Fit the front bottom deflector.
   a. Fit and tighten 3 screws fixing the front lower bottom deflector to the front subframe bracket.
   b. Fit and tighten 6 screws fixing the front lower bottom deflector to the left/right wheelhouse liner.
   c. Fit and tighten 6 screws fixing the front lower bottom deflector to the front bumper.
   d. Fit 5 bolts fixing the front upper bottom deflector to the front-end module, tighten them to **4-6Nm** , and check the torque.
   e. Fit 6 bolts fixing the front upper bottom deflector to the front-end module, tighten them to **4-6Nm** , and check the torque.
4. Lower the vehicle.

Rearview Mirror

Specification

Torque

Description	Value
Bolt-Outside rear view mirror to door	7-10Nm

Description and Operation

System Layout

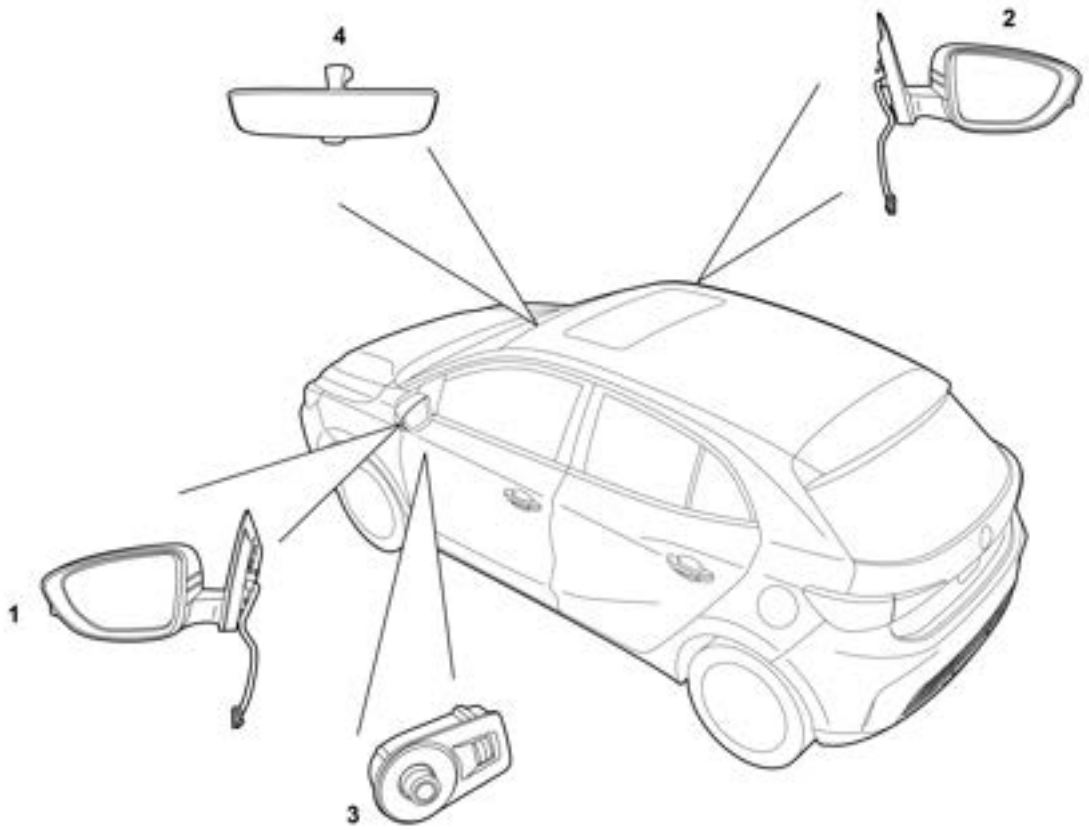

SC410300

1. External rearview mirror (left)
2. External rearview mirror (right)
3. External rearview mirror adjustment switch
4. Interior rearview mirror

System Control Diagram

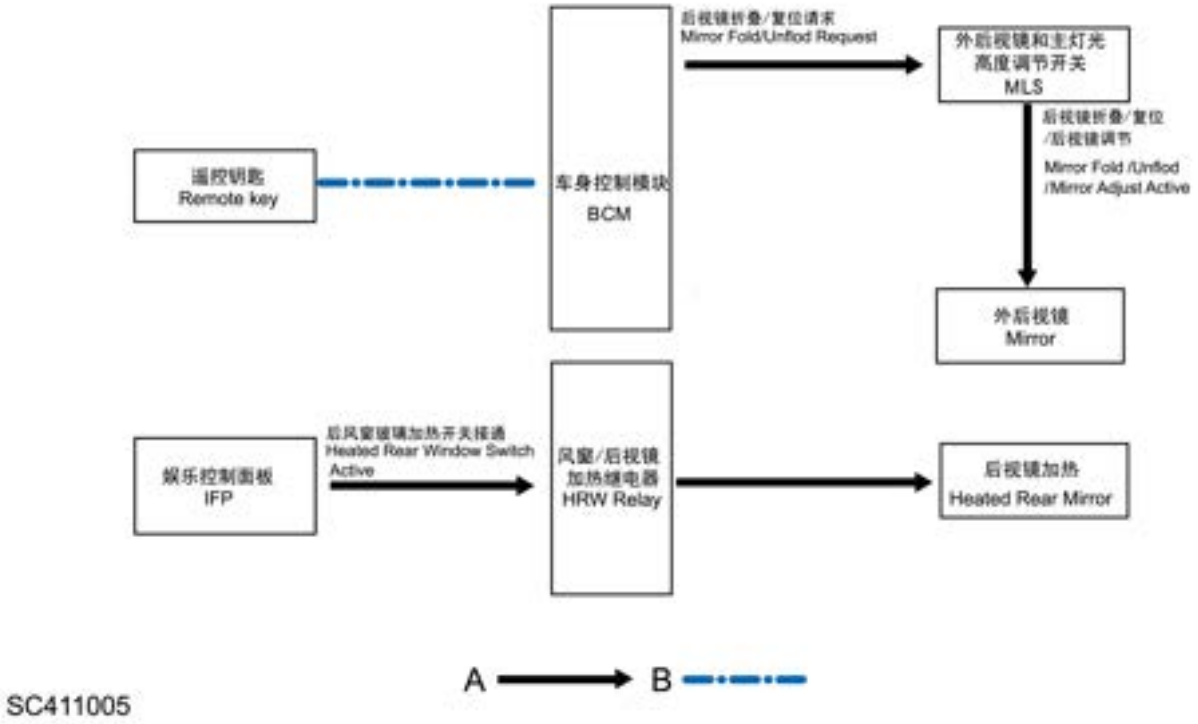

A=hard wire; B=RF signal

Description

External rearview mirror assembly

The exterior rearview mirror has electric adjustment function, and some configurations of rearview mirrors also have electric folding and heating functions. Each exterior rearview mirror assembly is controlled by a circular adjustment switch on the exterior rearview mirror and the main light height adjustment switch.

The exterior rearview mirror assembly has two parts on the left and right, both of which have the same basic structure. The exterior rearview mirror assembly shell is a plastic mold component, which houses the exterior rearview mirror lens (Figure 4) and side turn signal lights (Figure 2) inside. In some configurations, a camera is also installed below the interior of the exterior rearview mirror.

The exterior rearview mirror body (Figure 3) is a non maintenance component and must be replaced together as an assembly. The exterior rearview mirror cover (Figure 1), exterior rearview mirror lens (Figure 4), side turn signal (Figure 2), and camera (if installed) are repairable parts.

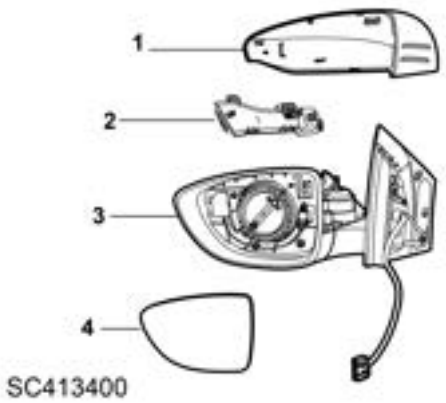

External rearview mirror adjustment switch

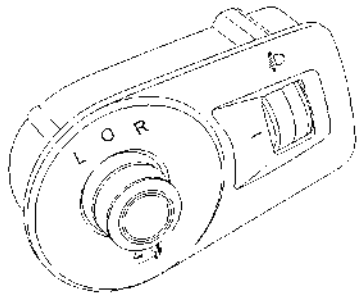

The exterior rearview mirror adjustment switch is located on the lower trim panel on the driver's side.

The external rearview mirror adjustment switch can operate the folding motor of the external rearview mirror assembly and the vertical and horizontal adjustment motor of the lens.

Interior rearview mirror assembly

This car is equipped with a manual anti glare interior rearview mirror. The interior rearview mirror is repaired and replaced as an assembly.

Operation

Exterior Rearview Mirror

The steering gear of the exterior rearview mirror includes 2 bidirectional motors (vertical motor and horizontal motor) which provide horizontal and vertical motions for the rearview mirror. The vertical motor is responsible for the up-and-down motion while the horizontal motor is for the left-and-right motion.

The exterior rearview mirror is also provided with a folding motor with power folding or unfolding function.

The exterior rearview mirror can provide the following functions:

- Exterior Rearview Mirror Glass Heating
- Exterior Rearview Mirror Glass Adjustment
- Exterior Rearview Mirror Assembly Folding
- Direction Indicator Lamp

Exterior Rearview Mirror Glass Heating

The exterior rearview mirror glass heating function is designed to avoid appearance of mist or fog on the mirror. The heating element is located at the rear of the mirror, which works when the rear window is heated. When operating the A/C control panel, the rear window heater relay operates to heat the exterior rearview mirror glass.

Exterior Rearview Mirror Glass Adjustment (Manual)

Fold manually to achieve the folding/unfolding of the exterior rearview mirror.

Exterior Rearview Mirror Glass Adjustment (Power)

The exterior rearview mirror control switch on the instrument panel touch panel is hardwired to the vertical motor and horizontal motor, which can realize the selection of left/right exterior rearview mirror glass and 4-direction adjustment of glass.

Press the L (Left) or R (Right) switch on the exterior rearview mirror control switch to select and adjust the exterior rearview mirror glass on the corresponding side.

After the exterior rearview mirror glass is selected, press the control buttons in the four directions to adjust the selected mirror glass up, down, left or right.

Exterior Rearview Mirror Assembly Folding (power)

The BCM receives the lock or unlock request, and activates the folding motor of the exterior rearview mirror assembly to fold or unfold the exterior rearview mirror by sending operation instructions to the exterior rearview mirror control switch via the LIN bus. The folding and unfolding request of the exterior rearview mirror can also be sent to the exterior rearview mirror assembly folding motor directly through the exterior rearview mirror control switch via hard wire to achieve the corresponding operation.

The exterior rearview mirror can be folded electrically by pressing the folding button on the exterior rearview mirror control switch. The mirror returns to its original position by pressing the button again.

The power folding function of the exterior rearview mirror assembly is operated through the exterior rearview mirror control switch, and the exterior rearview mirror assembly shall not be folded manually, otherwise, relevant equipment failure may be resulted therefrom.

Interior Rearview Mirror

Manual Anti-dazzle Function (if equipped)

During driving, the strong light from the interior rearview mirror may affect the driver. To avoid such visual impact, pull the lever at the base of the interior rearview mirror and change the view to 'dip' the mirror. Normal visibility is restored by pulling the lever back again.

Automatic Anti-dazzle Function (if equipped)

During driving, the strong light from the interior rearview mirror may affect the driver. The auto anti-dazzle function can solve this problem and avoid unnecessary consequences from this visual impact. The auto anti-dazzle interior rearview mirror will automatically dim when the headlamp of rear vehicle throws out dazzling light, and when the light intensity of the rear vehicle goes back to normal, the auto anti-dazzle interior rearview mirror will become bright again.

The auto anti-dazzle function is disabled during reversing, i.e, when the shift lever is in R gear and the engine is working, the BCM provides reverse signal for the interior rearview mirror. When the rearview mirror detects this input, it disables the auto anti-dazzle function, this helps the driver to observe the object behind the vehicle by the reflectivity of the rearview mirror during reversing.

Service Guide

Exterior Rearview Mirror Assembly

Remove

1. Disconnect the negative battery cable.
2. Remove the front door interior trim panel.

☞ **Front Door Interior Trim Panel Remove**

3. Disconnect the harness connector of the exterior rearview mirror.
4. Pry off the clips, and remove the exterior rearview mirror trim cover.

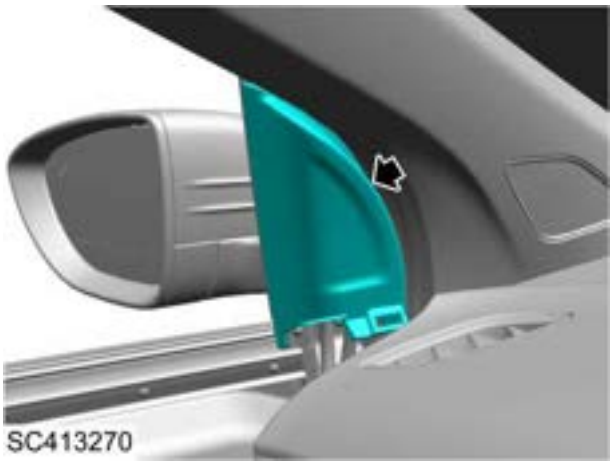

5. Remove 2 bolts fixing the exterior rearview mirror assembly to the door, and remove the exterior rearview mirror assembly.

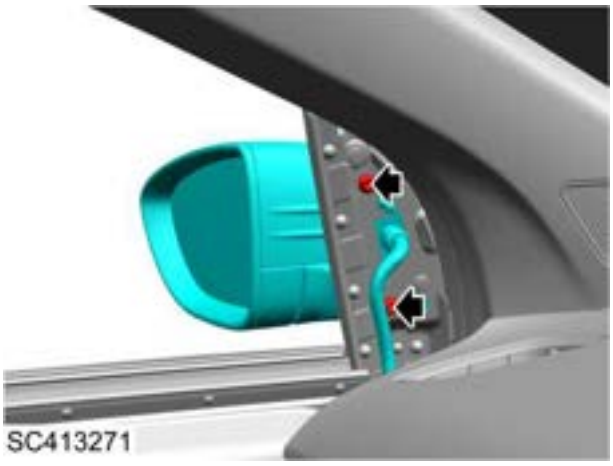

Refit

1. Fix the exterior rearview mirror assembly to the door, fit 2 bolts, tighten them to **7-10Nm** , and check the torque.
2. Locate the exterior rearview mirror trim cover to the door, and press the clips in place.
3. Connect the harness connector of the exterior rearview mirror.
4. Fit the front door interior trim panel.

☞ **Front Door Interior Trim Panel Refit**

5. Connect the negative battery cable.

Exterior Rearview Mirror Glass

Remove

1. Disconnect the negative battery cable.
2. Carefully push the glass near the body side into the exterior rearview mirror.
3. Hold the rearview mirror glass away from the body side and carefully separate the glass from the rearview mirror motor.

4. Disconnect the harness connector on the back of the rearview mirror glass to remove the exterior rearview mirror glass.

Refit

1. Fit the harness connector on the back of the rearview mirror glass.
2. Locate the rearview mirror glass to the rearview mirror motor and fit it in place.
3. Connect the negative battery cable.

Exterior Rearview Mirror Cover

Remove

1. Disconnect the negative battery cable.
2. Remove the exterior rearview mirror glass.

Exterior Rearview Mirror Glass Remove

3. Pry off the clip on the exterior rearview mirror cover to separate the cover from the rearview mirror.

SC413273

4. Remove the exterior rearview mirror cover.

Refit

1. Locate the exterior rearview mirror cover to the exterior rearview mirror, and align the clips.
2. Press the rearview mirror cover hard and fasten the clips.
3. Fit the exterior rearview mirror glass.

Exterior Rearview Mirror Glass Refit

4. Connect the negative battery cable.

Manual Anti-dazzle Interior Rearview Mirror
Remove - Manual

1. Disconnect the negative battery cable.
2. Pry off the clip, and remove the multi-function cover.

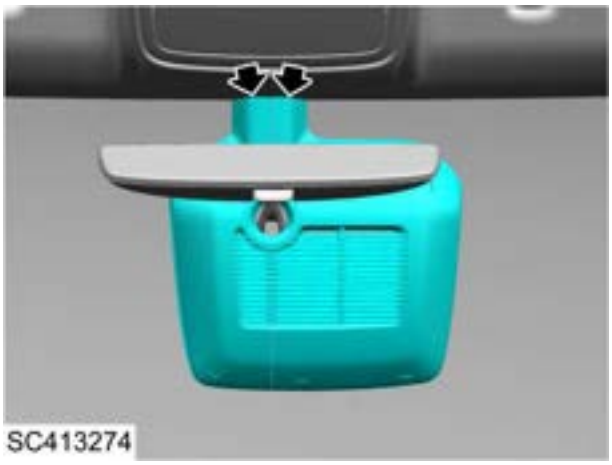

3. Remove 1 screw fixing the interior rearview mirror assembly to the base, and remove the manual anti-dazzle interior rearview mirror assembly.

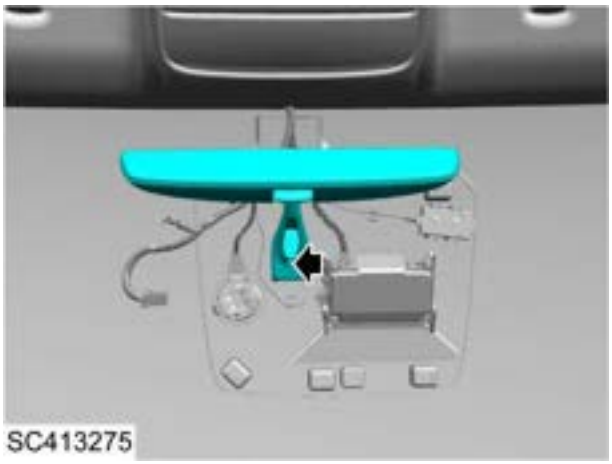

Refit - Manual

1. Locate the interior rearview mirror to the windshield base.
2. Fit and tighten 1 screw fixing the manual anti-dazzle interior rearview mirror assembly to the base.

Sunroof

Specification

Torque

Description	Value
Bolt-Power-operated Sunroof to body	7-9Nm
Bolt-Power-operated bracket Sunroof to Power-operated Sunroof	7-9Nm
Bolt-Power-operated bracket Sunroof to body	7-9Nm
Bolt-Sunroof front windshield to body	4.5-5.5Nm

Description and Operation

System Layout

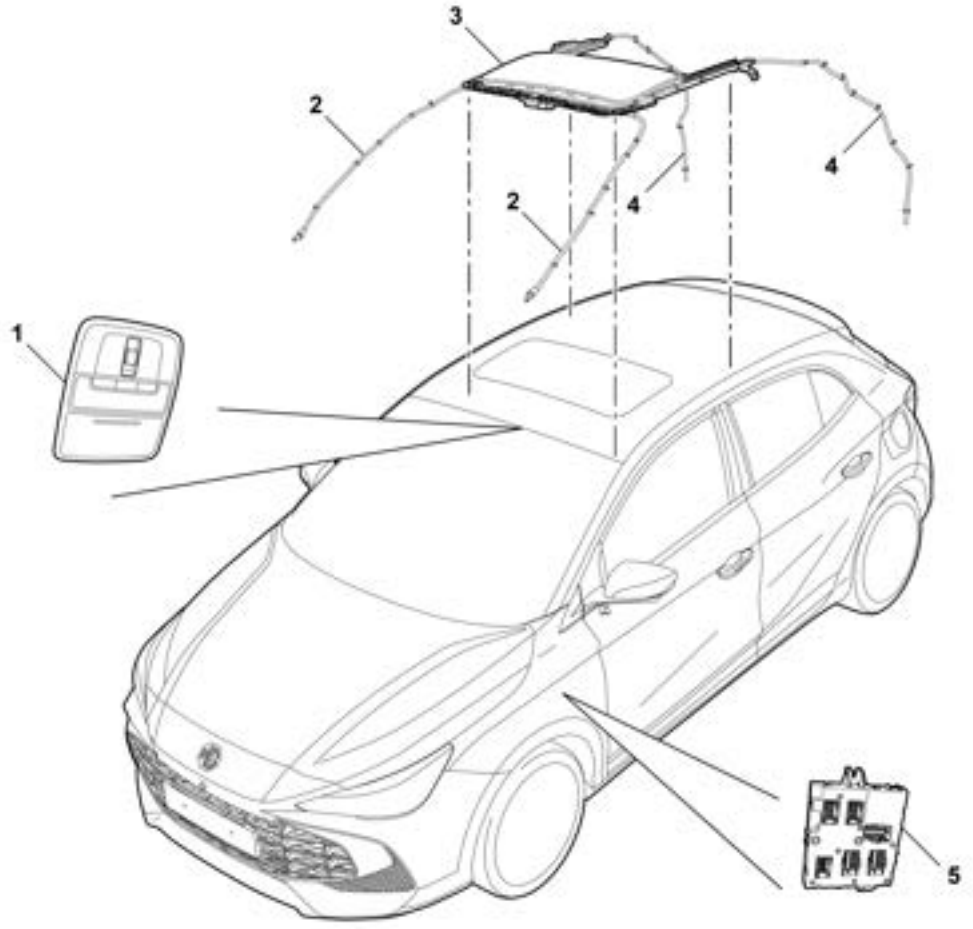

S6310211

1. Sunroof switch assembly
2. Front drainage pipe
3. Sunroof assembly
4. Rear water pipe
5. Body Control Module (BCM)

System Control Diagram

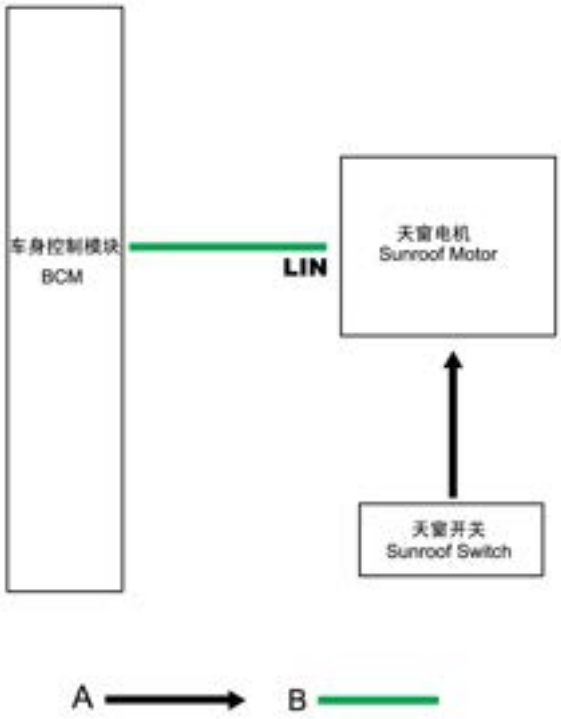

S6310212

A=Hard wire B=LIN line

Description

Sports sunroof assembly

The sunroof assembly includes a front fixed glass panel (Figure 1), sunshade (Figure 2), sunroof frame assembly (Figure 3), inner sealing strip (Figure 4), sunroof guide plate (Figure 5), and sunroof motion motor (Figure 6).

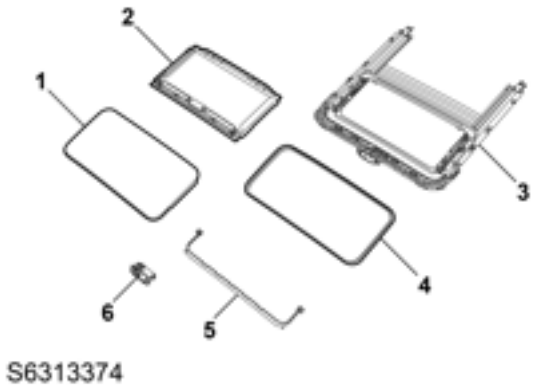

The sunroof frame assembly consists of a frame and two side guide rails, and is equipped with mechanical components such as glass brackets and cables.

The sunroof deflector is equipped with a pressure spring and is installed in the front of the guide rail.

The skylight glass panel is made of tempered glass. The glass panel is fixed to the sunroof frame with 4 screws.

The skylight sunshade is located in a groove on the inner edge of the frame side track; The operation of the sunroof sunshade is manually controlled.

The sunroof assembly is designed with a drainage management system. Water can be guided into drainage pipes through drainage channels.

Sunroof switch

The sunroof switch controls the tilting and sliding operation of the sunroof glass assembly. After receiving input commands from the sunroof switch, the sunroof glass motor assembly drives the sunroof glass to perform sliding open, tilt or close operations.

Operation

Sunroof operation

1. Sunroof switch

Tilt to open the sunroof

Press the sunroof switch upwards, and the rear edge of the sunroof will automatically tilt and open. Pressing the sunroof switch again can stop the movement of the sunroof at any time.

Sliding open sunroof

Push the sunroof switch back to the first gear and hold it, the sunroof will automatically slide open. Release the switch to stop the movement of the sunroof at any time. Push the sunroof switch firmly back to second gear, then release it, and the sunroof will automatically open to the bottom. Pushing the switch back in the middle can stop the movement of the sunroof at any time.

Close the sunroof

Push the sunroof switch forward to the first gear and hold it, the sunroof will automatically close. Release the switch to stop the movement of the sunroof at any time. Push the sunroof switch forward to the second gear with force, then release it, and the sunroof will automatically close completely. Pushing the switch forward again in the middle can stop the movement of the sunroof at any time.

Sunroof initialization

If there is a power outage during the movement of the sunroof glass, or if the sunroof assembly has been replaced, initialization operation needs to be carried out after power is turned on. The specific steps are as follows:

Sunroof initialization: Press the sunroof tilt open switch to make the sunroof run to the fully tilted open position, then press the sunroof tilt open switch again and hold it for about 5 seconds. When the sunroof glass vibrates and accompanied by a "click" sound, release the switch to complete the sunroof initialization setting.

Explanation: If the sunroof initialization operation is not performed, it may cause the sunroof to close loosely, or the anti pinch function to fail, or the sunroof may not respond to certain switch operations.

Anti pinch function (if any)

During the automatic sliding closing process, when encountering obstacles, the sunroof glass will stop closing and automatically open to remove the obstacles.

Thermal protection function

To prevent overheating and damage to the sunroof motor, the sunroof motor has a thermal protection function. According to whether the overheating protection has been triggered, there are two states for the running time and recovery time of the sunroof motor.

Before the first thermal protection activation, the sunroof enters thermal protection mode after continuous movement for 75 seconds, and the thermal protection recovery time is 30 seconds.

If the sunroof needs to be operated again after undergoing one thermal protection, the sunroof will activate the thermal protection again after continuous movement for 65 seconds, with a recovery time of 60 seconds.

After the thermal protection is activated, the running actions will continue to be completed and will not respond to other operations until the sunroof reaches the set thermal protection recovery time before it can respond to various operations again.

Service Guide

Sunroof Assembly

Remove

1. Disconnect the negative battery cable.
2. Remove the roof trim panel assembly.

☞ Roof Trim Panel Assembly Remove

3. Loosen the clips, and disconnect the sunroof drain pipe from the sunroof assembly.

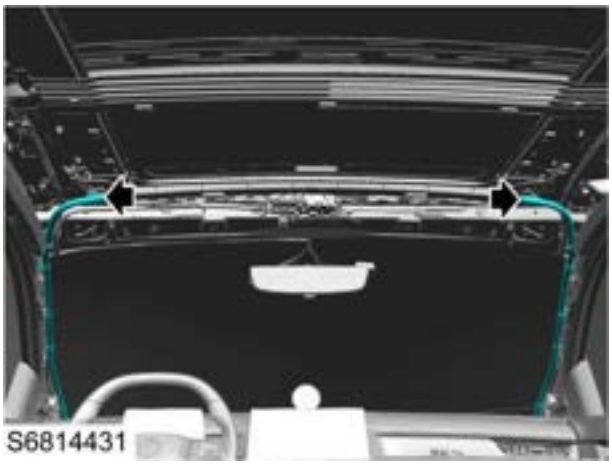

4. Remove 2 bolts (1) fixing the small sunroof bracket to the small sunroof and 2 bolts (2) fixing the small sunroof bracket to the body, and remove the small sunroof bracket.

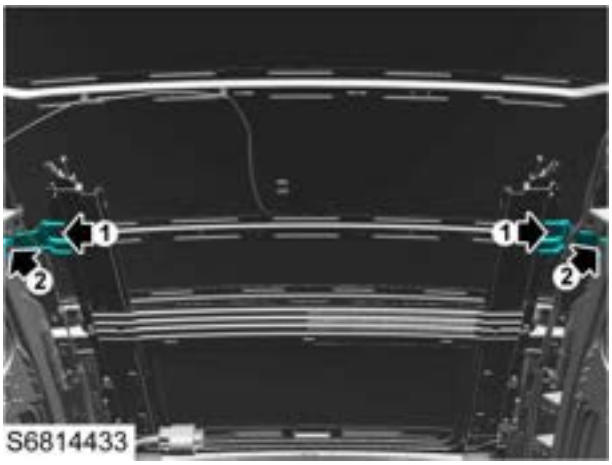

5. Remove 9 bolts (9) fixing the small sunroof assembly to the body, disconnect the harness connector (2), and remove the small sunroof assembly.

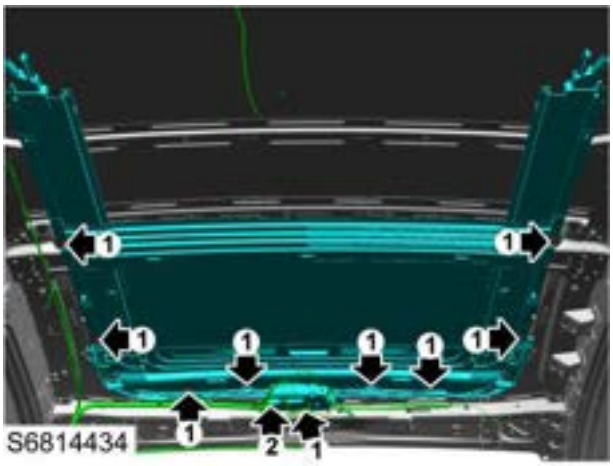

Refit

1. Fit 9 bolts fixing the electric small sunroof assembly to the body, tighten them to **7-9Nm** , and check the torque.
2. Fit 2 bolts fixing the electric small sunroof bracket to the electric small sunroof, tighten them to **7-9Nm** , and check the torque.
3. Fit 2 bolts fixing the electric small sunroof bracket to the body, tighten them to **7-9Nm** , and check the torque.
4. Connect the connector of the sunroof glass panel motor.
5. Press the clips, and fit the sunroof drain pipe to the sunroof assembly.
6. Fit the roof trim panel assembly.

☞ Roof Trim Panel Assembly Refit

7. Connect the negative battery cable.

Maintenance

1. Clean up the dust and dirt on the sunroof glass panels and the exposed sunroof surface and the foreign materials on the glass run channel where the mechanical structure runs and the glass panel edges.
2. Remove the front and rear sunroof glass panels and place them properly.
3. Ensure no deformation inside the glass run channel groove and no damage or scratch on the surface coating.
4. Operate the sunroof to the closed state, i.e., operate the mechanical assembly of the sunroof to the front of the glass run channel. Wipe the old grease off the rear channel with a clean cloth for over three times repeatedly until less grease can be wiped off.
5. Fully open the sunroof, i.e., operate the mechanical assembly of the sunroof to the rear of the glass run channel. Wipe the old grease off the front channel with a clean cloth for over three times repeatedly until less grease can be wiped off.
6. Apply the after-sales special grease to the channel

(sectional view of channel is illustrated) where the mechanical structure runs when the sunroof is opened and closed. Make sure the grease is applied evenly at the red line below. The special grease should be applied at a constant speed and shape a uniform thickness with visible oily reflection of light and without large caking.

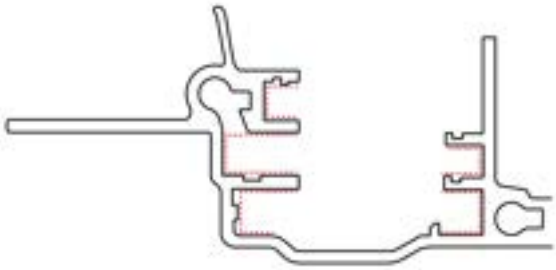

S6313174

7. Apply grease to the blocks at two corners of front glass panel to prevent false triggering of anti-pinch function due to increased friction between glass panel and wind-proof net during closing of front glass panel.

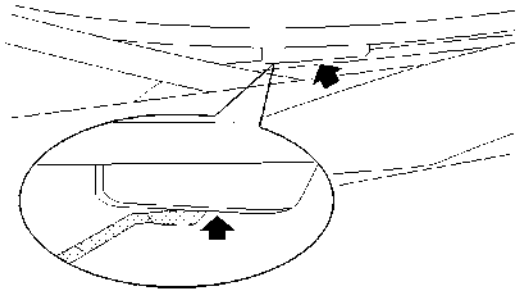

S6313164

8. Fit the glass panel to the sunroof assembly. Initialise the sunroof glass: Fully close the glass, push the sunroof glass switch forward to the 2nd position and hold it for about 10 seconds, the glass will close after auto sliding open for a distance. During the entire process, the switch must be kept in the 2nd position.
9. Open and close the front sunroof glass panel at least 10 times to confirm if it works normally.

Sunroof Deflector Assembly

Remove

1. Open the sunroof glass panel to the end.
2. Loosen the clip and remove the sunroof deflector assembly by pulling it upward.

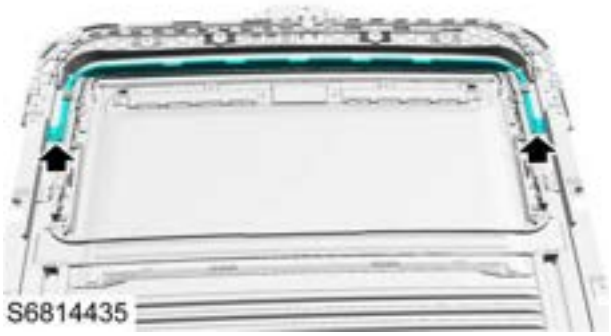

Refit

1. Align the adapter of the sunroof deflector with the hole of the body, and press it hard in place.
2. Close the sunroof glass.
3. Perform self-learning for the sunroof glass motor: Close the glass; push the sunroof glass switch forward to the second position and hold for 10 seconds, and the glass will automatically slide open for a distance and then fully close automatically, during which the switch shall be kept in the second position.

Front Sunroof Glass Panel
Remove - Front

1. Remove the roof trim panel.

Roof Trim Panel Remove

2. Move the sunroof movement glass panel trim panel fully rearward.
3. Remove 4 bolts fixing the sunroof movement glass panel to the sunroof frame, and remove the sunroof movement glass panel.

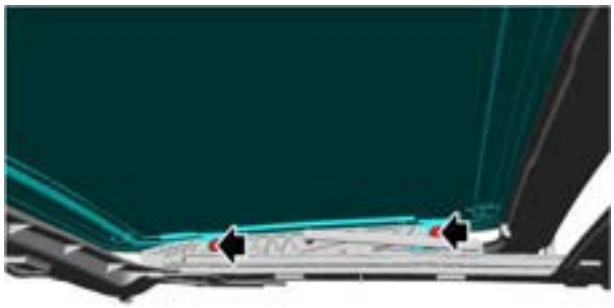

S6814438

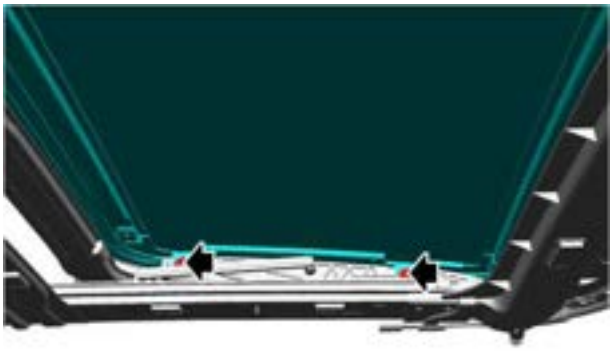

S6814439

Refit - Front

1. Locate the sunroof movement glass panel to the sunroof frame, fit 4 bolts, tighten them to **4.5-5.5Nm** and check the torque.
2. Restore the sunroof movement glass panel trim panel.
3. Fit the roof trim panel.

Roof Trim Panel Refit

Sunroof Sunshade
Remove

1. Remove the sunroof assembly.

☞Sunroof Assembly Remove

2. Remove 2 screws fixing the sunshade stopper to the sunshade.

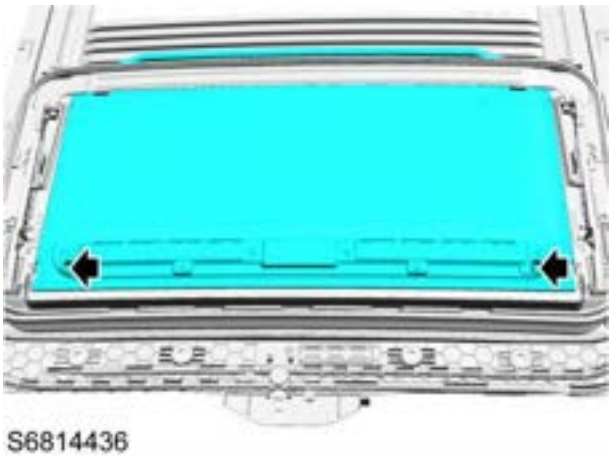

3. Remove 2 screws fixing the sunroof assembly stopper to the sunroof assembly.

4. Pull out the sunshade rearward, so that it is disengaged from the sunroof assembly stopper track.

Refit

1. Locate the sunroof sun visor to the sunroof assembly track and push it into an appropriate position.
2. Fit and tighten 2 screws fixing the sunroof assembly stopper to the sunroof assembly.
3. Fit and tighten 2 screws fixing the sunroof sunshade stopper to the sunroof sunshade.
4. Fit the sunroof assembly.

☞Sunroof Assembly Refit

Sunroof Glass Panel Motor

Remove

1. Disconnect the negative battery cable.
2. Remove the overhead console assembly.

☞ **Overhead Console Assembly Remove**

3. Remove 3 screws (1) fixing the sunroof glass panel motor to the body, disconnect the connector (2) of the sunroof glass panel motor and remove the sunroof glass panel motor.

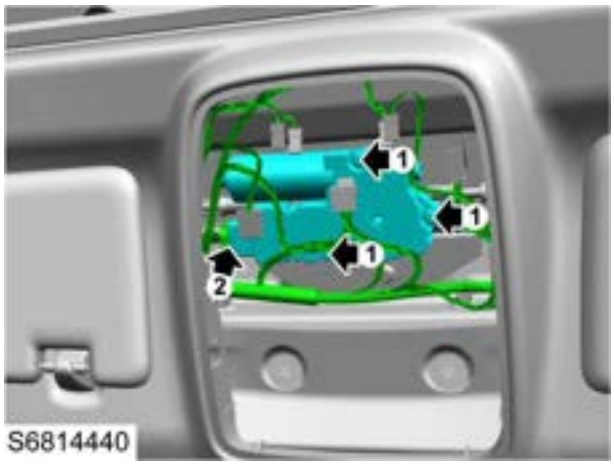

Refit

1. Locate the sunroof motor, and engage the motor drive gear into the sunroof cable.
2. Fix the sunroof glass panel motor to the sunroof assembly, fit and tighten 3 screws.
3. Connect the connector of the sunroof glass panel motor.
4. Fit the overhead console assembly.

☞ **Overhead Console Assembly Refit**

5. Connect the negative battery cable.
6. Perform self-learning for the sunroof glass motor: Close the glass; slide the sunroof glass switch forward to "2" position and hold it for 10 seconds, the glass will automatically close completely after auto slide open for a distance. During the entire process, the switch must be kept in "2" position.

Front Sunroof Drain Pipe

Remove

1. Disconnect the negative battery cable.
2. Remove the roof trim panel assembly.

☞ **Roof Trim Panel Assembly Remove**

3. Disconnect the sunroof front drain pipe from the sunroof drain channel (1).
4. Disconnect the sunroof front drain pipe from the body (2), loosen the clips, and remove the sunroof front drain pipe.

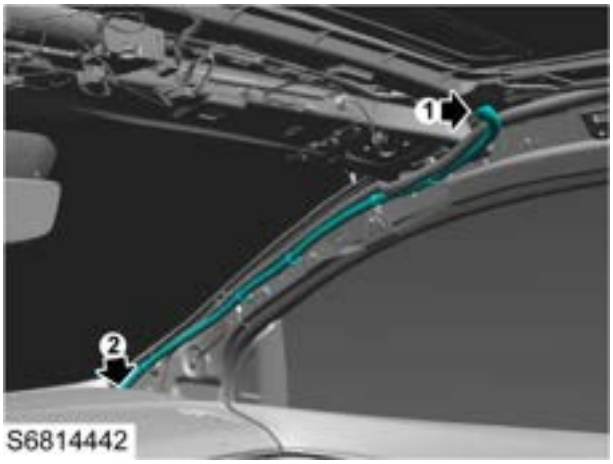

Refit

1. Fit the sunroof front drain pipe and secure it with clips.
2. Connect the sunroof front drain pipe to the body.
3. Connect the sunroof front drain pipe to the sunroof drain channel.
4. Fit the roof trim panel assembly.

☞ **Roof Trim Panel Assembly Refit**

5. Connect the negative battery cable.

Rear Sunroof Drain Pipe

Remove

1. Disconnect the negative battery cable.
2. Remove the roof trim panel assembly.

☞ **Roof Trim Panel Assembly Remove**

3. Remove the trunk side trim panel.

☞ **Trunk Side Trim Panel Remove**

4. Disconnect the sunroof rear drain pipe from the sunroof drain channel.

5. Disconnect the sunroof rear drain pipe from the body.

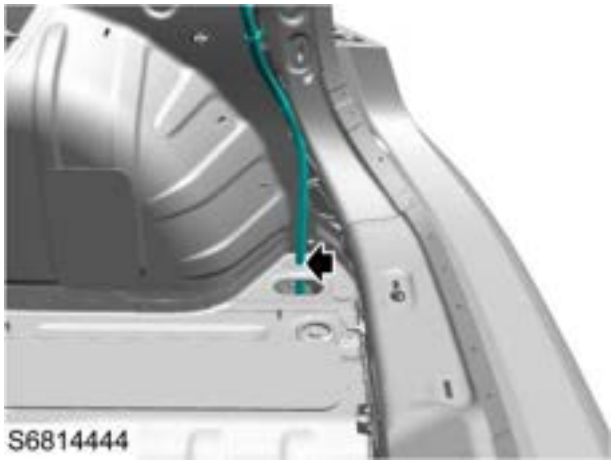

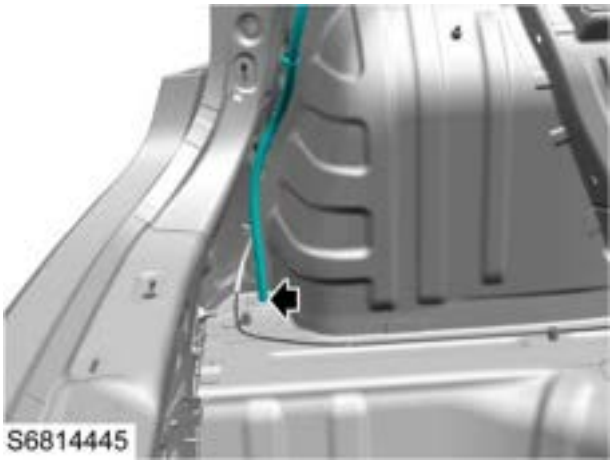

6. Loosen the clips and remove the sunroof rear drain pipe.

Refit

1. Fit the sunroof rear drain pipe and secure it with clips.
2. Connect the sunroof rear drain pipe to the sunroof drain channel.
3. Connect the sunroof rear drain pipe to the body.
4. Remove the trunk side trim panel.

☞ **Trunk Side Trim Panel Refit**

5. Fit the roof trim panel assembly.

☞ **Roof Trim Panel Assembly Refit**

6. Connect the negative battery cable.

Sunroof Outer Weatherstrip

Remove

1. Remove the sunroof movement glass panel.

Sunroof Movement Glass Panel Remove - Front

2. Peel off the sunroof outer weatherstrip from the roof, and remove the weatherstrip.

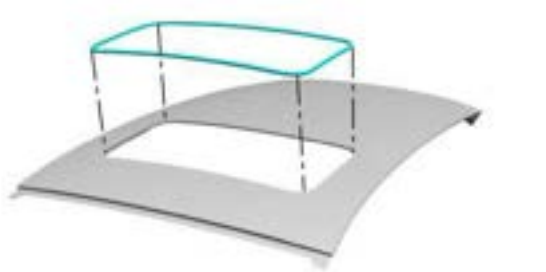

S6814446

Refit

1. There shall be free of grease, wax, water and dust and clean on the surface of sheet metal fitting the sunroof weatherstrip. Dip the wiping cloth with no fiber falling off in alcohol or isopropyl alcohol or other solvents (alcohol or isopropyl alcohol with water ≥50:50) to clean the sheet metal. Fit the sunroof outer weatherstrip and secure it with clips.
2. After the organic solvent fully volatilizes, align the seam of new sunroof outer weatherstrip with the middle of sheet metal flanging at the rear of head cover, tear off a bit of released paper of the tape near the seam, and attach the weatherstrip there on the sheet metal for initial positioning (The temperature of the weatherstrip and sheet metal mounting surface should be ≥ 16°C).

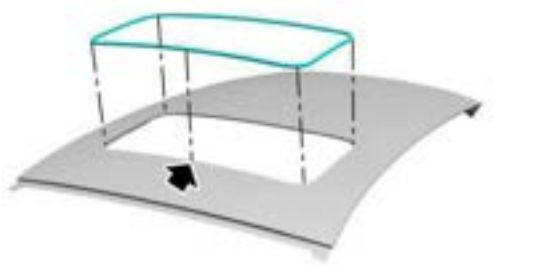

S6814447

3. Fit the sunroof outer weatherstrip into the sheet metal flanging in proper order for pre-positioning, where the last quarter of the total length is distributed at the longer straight edge (Note that the weatherstrip shall not be stretched during this process).
4. The released paper of tape shall be torn down from the sunroof weatherstrip at a small angle (slow down the tearing speed around the corner).

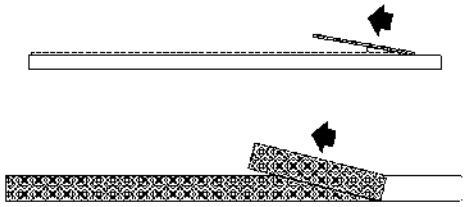

SC113963

5. Use the weatherstrip roller TBO00060 to completely roll 3 times in the same direction (The compacting force is 60–70N, and it shall be ensured that the weatherstrip roller is perpendicular to the weatherstrip mounting surface), and roll the weatherstrip in place.
6. Ensure that the sunroof weatherstrip is level with the smooth surface of roof after assembly (not higher than the smooth surface of roof), with no wrinkle at the corner.
7. Fit the sunroof movement glass panel.

Sunroof Movement Glass Panel Refit - Front

Wiper and Washer

Specification

Torque

Description	Value
Nut-Wiper arm to linkage	28-32Nm
Bolt-Wiper module to body	7-10Nm
Nut-Rear wiper arm to linkage	7-10Nm
Bolt-Rear wiper module to tail door	7-10Nm

Description and Operation

System Layout

Layout diagram of wiper washing system

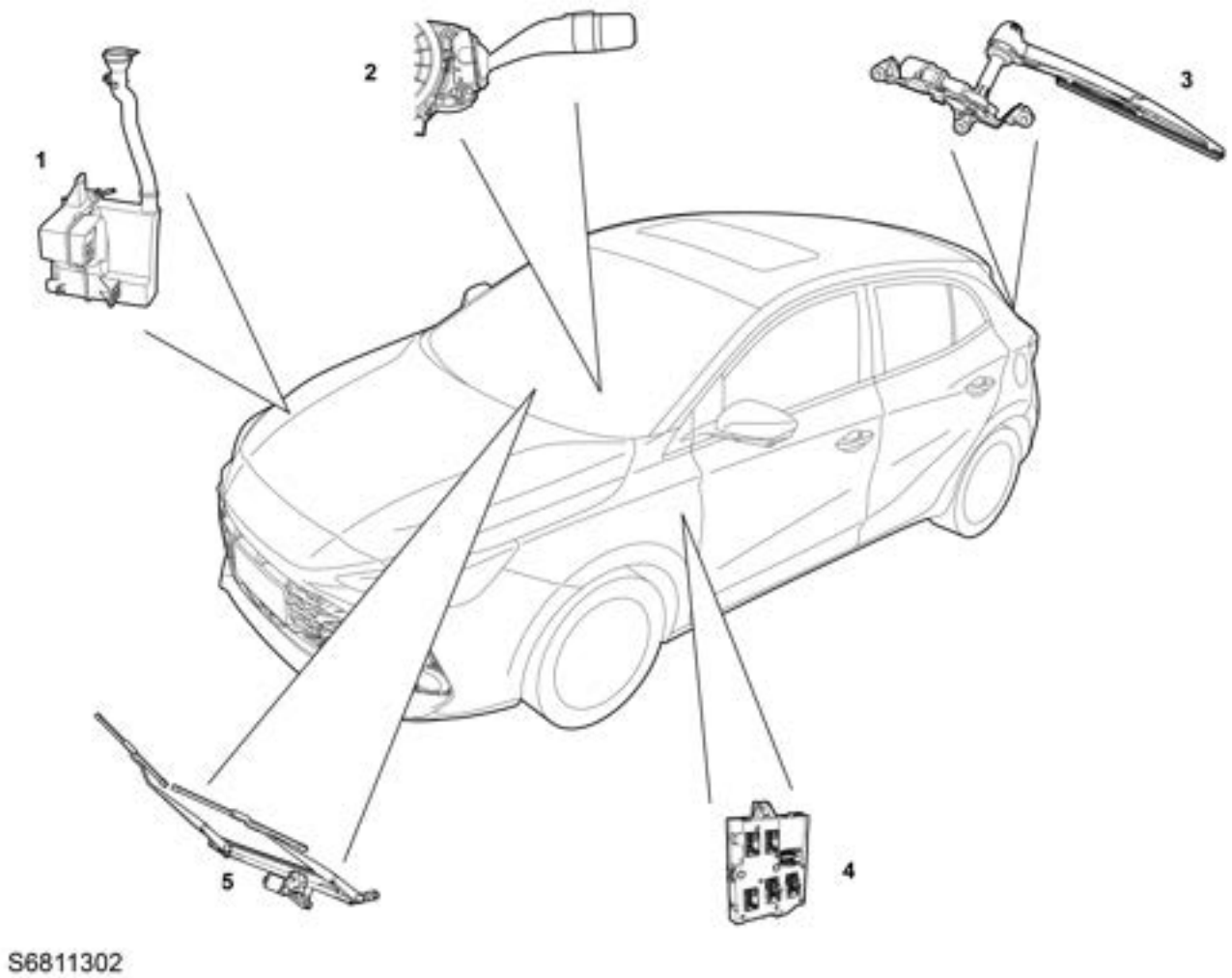

1. Windshield Washer
2. Windshield wiper/washer switch
3. Rear windshield wiper assembly
4. Body Control Module (BCM)
5. Front windshield wiper assembly

System Control Diagram

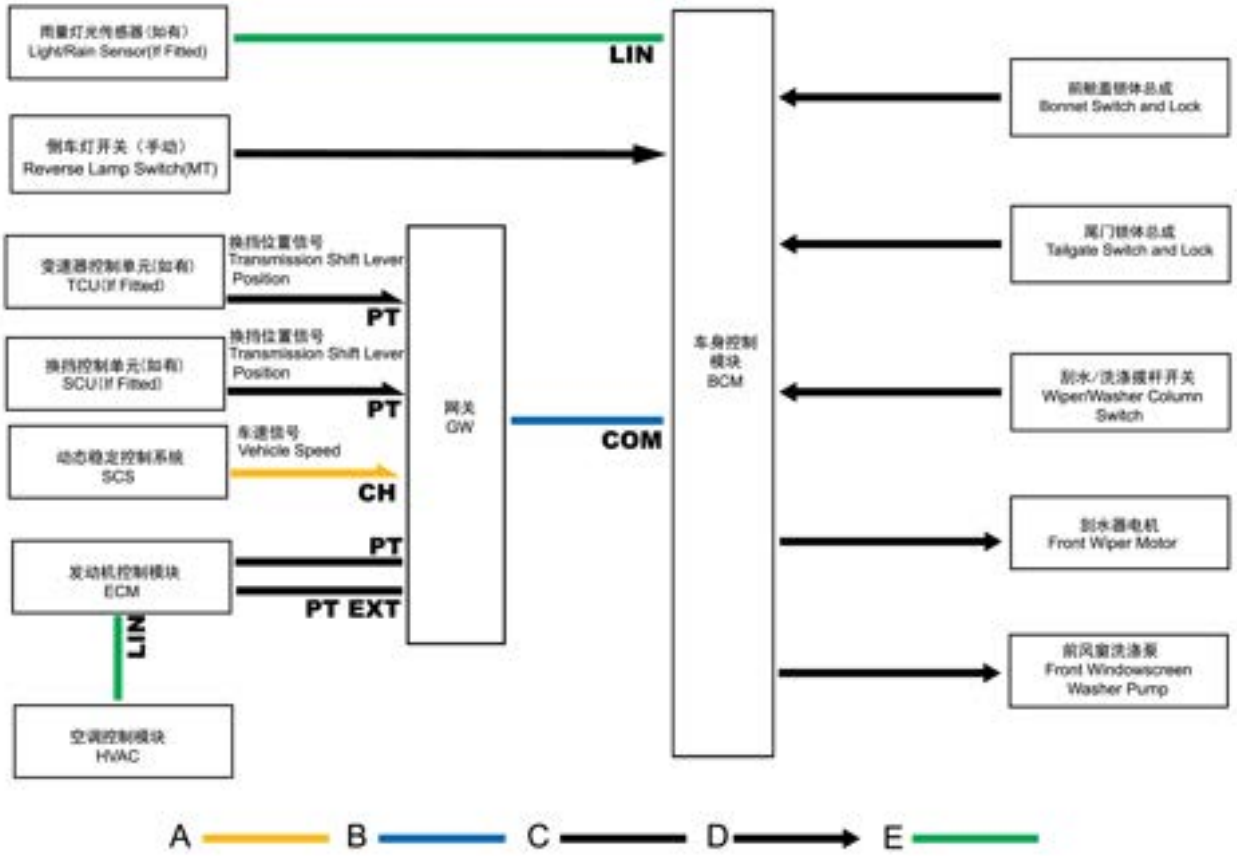

S6811301

A=chassis high-speed CAN line; B=Comfort CAN line; C=Power High Speed/Power Expansion CAN Line; D=hard wire; E=LIN line

Description

概述

The wiper and washer system is controlled by the body control module (BCM (Body Control Module)) Controlled to operate upon receiving instructions from the wiper/washer lever switch installed on the right side of the steering wheel.

The diagnostic information for the wiper and washer systems can be read through an after-sales diagnostic tool.

wiper

The rear wiper includes a wiper shaft cover (Figure 1), wiper arm (Figure 4), motor shaft seal ring (Figure 2), wiper blade (Figure 5), and motor (Figure 3). The front wiper includes a blade (Figure 7), wiper arm (Figure 6), and wiper linkage assembly (Figure 8).

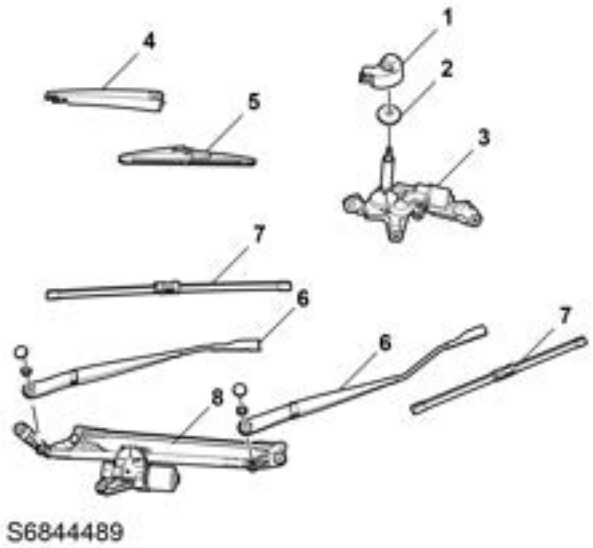

The wiper motor is located under the air intake grille at the bottom of the windshield, and is mounted on a connecting rod mechanism, which is then mounted on a bracket between the inner and outer bulkheads. The motor is an electronic motor that can achieve precise control of the water spraying area. The scraper arm is installed on the output shaft of the motor and linkage mechanism, consisting of an arm seat, an arm plate, and an arm rod. A spring is located below the arm plate, with one end connected to the arm and the other end connected to the arm seat through a hook, which can apply appropriate pressure to the wiper blades on the windshield. The scraper is fixed on the wiper arm through a connector, and the scraper is a boneless scraper, ensuring that the glass can be cleaned relatively clean in various wiping modes while reducing noise and wind resistance.

The rear wiper is located at the bottom of the rear windshield, and the motor is fixed to the tailgate through a mounting plate, which is a DC motor. The wiper arm is installed on the motor output shaft. To avoid damage, special tools are required to remove the wiper arm from the shaft.

scrubber

The windshield washer includes a front windshield washer nozzle (Figure 1), a front windshield washer nozzle hose (Figure 2), a front windshield washer middle connecting hose (Figure 3), a front windshield washer connecting hose (Figure 4), a washer pot filling pipe assembly (Figure 13), a windshield washer pot (Figure 12), a windshield washer pump sealing ring (Figure 11), a windshield washer pump (Figure 10), and a rear windshield washer front connecting hose (Figure 9) The middle connecting hose of the rear windshield washer (Figure 8), the rear connecting hose of the rear windshield washer (Figure 5), the rear windshield washer nozzle hose (Figure 6), and the rear windshield washer nozzle (Figure 7).

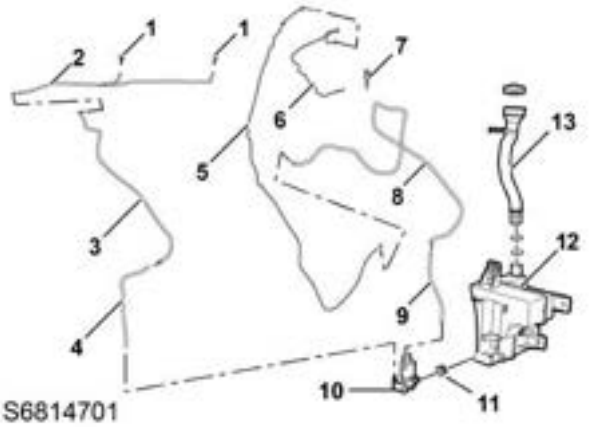

The washing pot is located in front of the right wheel cover of the vehicle and has a capacity of approximately 3 liters. The filling pipe assembly with a funnel neck in the engine compartment can be used to supplement the washing solution in the washing pot.

There is a washing pump below the washing pot. When the washing pump starts running, it will extract the liquid from the washing pot and deliver it to the front and rear washing nozzles under pressure. The one-way valve and quick connector in the pipeline can prevent liquid from flowing back into the washing pot from the nozzle and hose, ensuring that the washer is ready to use.

Operation

Overview

The front/rear wiper/washer system is controlled by theBCM . When theBCM receives an ON signal from the washer/wiper lever switch connected by the hard wire, it drives the washer pump and wiper motor to work. The bidirectional washer pump provides washer fluid for the windscreen and rear window.

Front Wiper/Washer System

The front wiper system includes theBCM , front washer/wiper lever switch and two relays. One of the relays (1) is used to turn on/off the front wiper, and the other (2) is used to control the front wiper speed. When theBCM receives signals from the front washer/wiper lever switch, it drives the front wiper to work by closing the two wiper relays in the front compartment fuse box.

The switches for single wipe, intermittent wipe and low/high speed wipe form a closed circuit with theBCM through relay 1 or 2.

Single Wipe

When theBCM receives a valid single wipe request, it will control the front wiper to work. As long as the single wipe request is valid, the front wiper will keep working.

Low Speed Wipe

When the front wiper/washer lever switch is turned to the low speed wipe mode, theBCM receives the position signal of the lever switch and controls the front wiper enable relay 1 to work while the wiper speed relay 2 does not work. The power supply is connected to the motor through a resistor after relay 1. The resistor reduces the power, so the front wiper operates at low speed.

High Speed Wipe

When the front wiper/washer lever switch is turned to the high speed wipe mode, theBCM receives the position signal of the lever switch and controls the front wiper enable relay 1 to work while the wiper speed relay 2 also works. The power supply bypasses the resistor for deceleration and connects with the motor directly, at this stage, the wiper works at high speed.

Intermittent Wiping Mode - Variable Intermittent Wiping (Without Rain Sensor)

The function of variable intermittent wiping: The vehicle is provided with a wiper delay potentiometer, but without an optional rain sensor.

When receiving a valid wiper interval request, theBCM will control the front wiper to operate. The time interval of intermittent wiping varies with the vehicle speed level and the setting of wiper delay potentiometer.

When the front wiper/washer lever switch is turned to the intermittent wipe position, the dynamic stability control system monitors the wheel speed signals and transmits them to theBCM via the CAN bus.

TheBCM adjusts the selected delay time by comparing the vehicle speed with the resistance corresponding to the intermittent delay rotary switch position.

Intermittent Wiping Mode - With Rain Sensor

With the Start switch in "ACC" or "ON/RUNNING" position, when the front wiper/washer lever switch is turned to the intermittent wipe position, the rain sensor function can be enabled. TheBCM receives a valid wiper signal from the rain sensor. The signal will identify the wiping speed, then theBCM will control the operation of the front wiper. The rain sensor continuously monitors the rainfall status of the windscreen; when the rain drops are below the threshold value, theBCM will turn off the front wiper automatically.

Wash and Wipe

With the Start switch in "ACC" or "ON/RUNNING" position, when the front wiper/washer lever switch is pulled towards the steering wheel to the intelligent wipe position, theBCM controls the front wiper to work at low speed, controls the front washer pump to work, and triggers the internal counter. When the counter value reaches the set value, theBCM closes the relay, and the front wiper starts to work.

IMPORTANT: The wiper continues operating for three times after the lever switch is released. After several seconds, the wiper will wipe once more to eliminate the washer fluid on the windscreen.

Rear Wiper/Washer System

After receiving a valid request from the rear wiper switch, theBCM will control a single relay to perform the corresponding operation.

Wash and Wipe

When the rear wiper/washer lever switch is turned to Wash and Wipe, theBCM controls the rear washer pump to operate, monitors the switch status and starts counting. As long as the switch is not released, theBCM will activate the rear wiper relay, and the rear wiper works continuously.

R Gear Wipe

When the Start switch is in "ACC" or "ON/RUNNING" position, and the front washer/wiper lever switch is in high speed/low speed/intermittent mode, if the shift lever is turned to the R gear, theBCM will control the rear wiper relay automatically to close after several seconds and activate the rear wiper, while this does not affect the front wiper.

Windscreen Washer/Wiper Inoperative

If the bonnet or tailgate is open, the washer and wiper on the corresponding side will be disabled in any mode.

Once theBCM detects that the tailgate is opened while the rear wiper is working, the rear wiper will stop immediately. After the tailgate is closed, the rear wiper returns to normal state after appr. 5s.

Service Guide

Windscreen Wiper Blade Assembly

Remove

Caution :

1. With the bonnet in closed state and the Start switch in OFF position for up to 20 seconds, press down the wiper stalk switch to Single Wipe position and release it, and the wiper will automatically move to service position, and stop on the windscreen.
2. Lift the wiper arm from the glass to the position away from the windscreen.
3. Press the button of the windscreen wiper arm, pull the upper end of the wiper blade outward, and separate it from the wiper arm.

S6814448

Refit

1. Fit the wiper blade into the wiper arm slot and push the wiper blade towards the wiper arm until it is fully embedded.
2. Put the wiper assembly back onto the windscreen, and check whether the wiper blade is fixed correctly to the wiper arm.
3. Press down the wiper stalk switch again to Single Wipe position and release, or turn on the Start switch. The wiper will exit the service mode and automatically return to its original position.

Windscreen Wiper Arm Assembly

Remove

1. Open the bonnet.
2. Pry off the wiper arm shaft cover and remove 2 nuts fixing the windscreen wiper arm to the linkage mechanism.

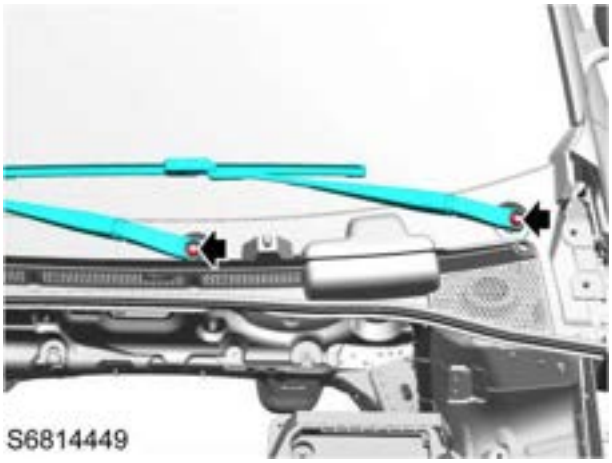

3. Remove the windscreen wiper arm assembly.

Refit

1. Fix the windscreen wiper arm assembly to the linkage mechanism, and ensure that the blade is correctly adjusted to the initial position and aligned with the wiper mounting/locating dots on the windscreen.
2. Fit 2 nuts fixing the wiper arm to the linkage mechanism, tighten them to **28-32Nm** , and check the torque.
3. Fit the wiper arm shaft cover, and close the bonnet.

Windscreen Wiper Module Assembly and Motor

Remove

1. Disconnect the negative battery cable.
2. Remove the A/C air inlet grille assembly.

☞A/C Air Inlet Grille Panel and Accessories Remove

3. Remove 3 bolts (1) fixing the windscreen wiper module assembly to the body, and disconnect the harness connector (2).

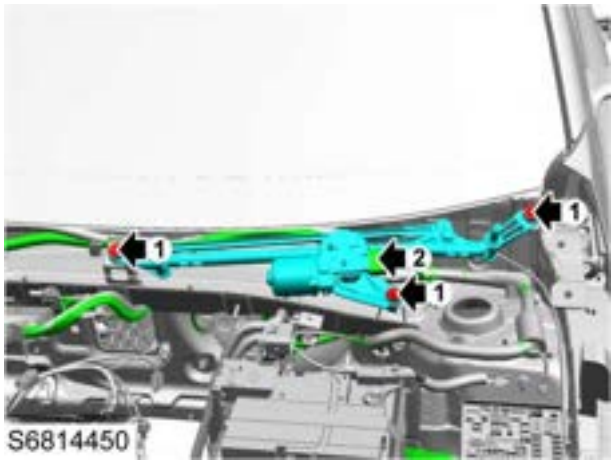

4. Lift and remove the windscreen wiper module assembly from the engine compartment.
5. Remove 3 bolts (1) and 1 nut (2) fixing the windscreen wiper motor to the wiper module, and remove the motor.

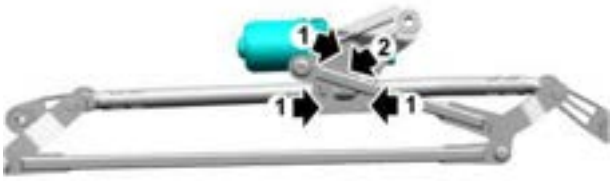

Refit

1. Fit 3 bolts fixing the wiper motor to the wiper module, tighten them to TBD, and check the torque.
2. Fit and tighten 1 nut fixing the wiper motor to the wiper module.
3. Fit 3 bolts fixing the windscreen wiper module assembly to the body, tighten them to **7-10Nm** , and check the torque.
4. Connect the harness connector.
5. Fit the A/C air inlet grille assembly.

☞A/C Air Inlet Grille Panel and Accessories Refit

6. Connect the negative battery cable.

Windscreen Washer Reservoir Assembly

Remove

1. Remove the windscreen washer pump.

☞Windscreen Washer Pump Remove

2. Remove the windscreen washer reservoir filler pipe assembly.

☞Windscreen Washer Reservoir Filler Pipe Assembly Remove

3. Remove 3 bolts fixing the windscreen washer reservoir to the body.

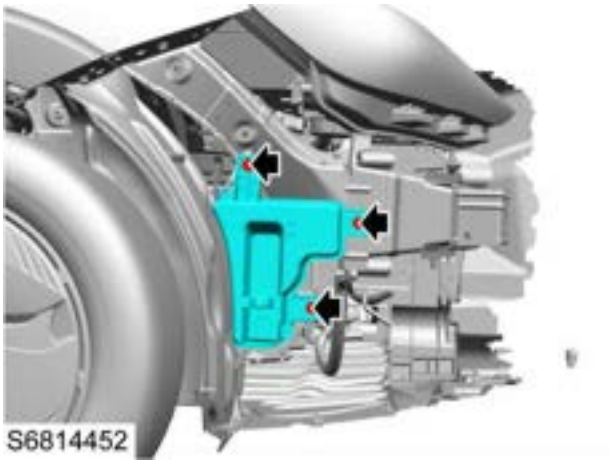

4. Remove the windscreen washer reservoir assembly.

Refit

1. Locate the windscreen washer reservoir to the body, fit 3 bolts, tighten them to TBD, and check the torque.
2. Fit the washer reservoir filler pipe assembly.

☞Washer Reservoir Filler Pipe Assembly Refit

3. Fit the windscreen washer pump assembly.

☞Windscreen Washer Pump Assembly Refit

4. Refill the windscreen washer fluid.

Windscreen Washer Reservoir Filler Pipe Assembly

Remove

1. Open the bonnet.
2. Pry off 1 bolt fixing the windscreen washer reservoir filler pipe assembly to the right headlamp bracket.

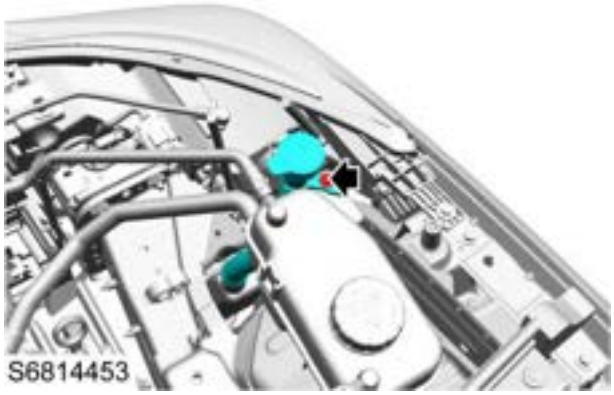

3. Remove the windscreen washer reservoir filler pipe assembly.
4. Check the seal ring at the neck of the windscreen washer reservoir assembly for damage or deformation, and replace it timely when necessary.

Refit

1. Fit the windscreen washer reservoir filler pipe assembly to the windscreen washer reservoir assembly.
2. Fit and tighten 1 bolt fixing the windscreen washer reservoir filler pipe assembly to the right headlamp bracket.
3. Close the bonnet.

Windscreen Washer Pump Assembly

Remove

1. Disconnect the negative battery cable.
2. Remove the front bumper assembly.

☞ **Front Bumper Assembly Remove**

3. Place a suitable container for cleaning under the windscreen washer pump to collect the spilled windscreen washer fluid.
4. Remove the windscreen washer pump - low configuration.
   a. Disconnect the windscreen washer pump hose from the windscreen washer pump (1), and disconnect the harness connector (2).

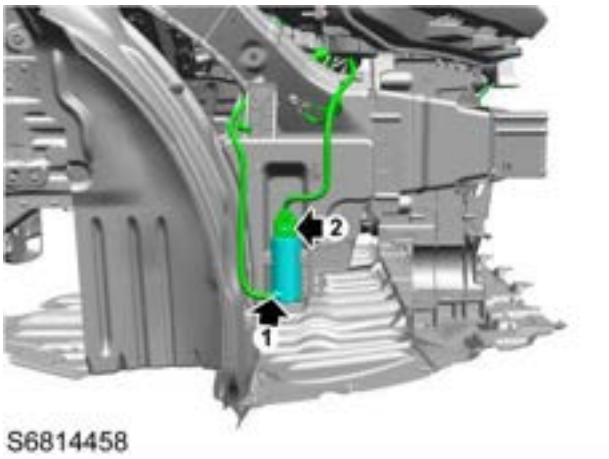

5. Remove the windscreen washer pump - high configuration.
   a. Disconnect the windscreen washer pump hose from the windscreen washer pump (1), and the rear window washer pump hose from the windscreen washer pump (2).
   b. Disconnect the harness connector (3).

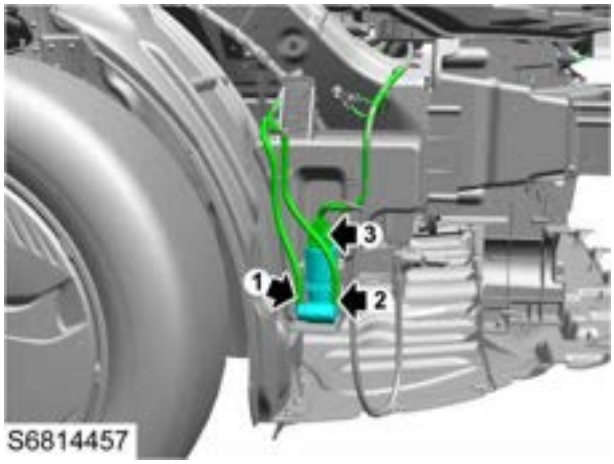

6. Pull out the windscreen washer pump, and remove the windscreen washer pump assembly.

Refit

1. Fit the washer pump to the windscreen washer reservoir.
2. Fit the windscreen washer pump - high configuration.
   a. Connect the harness connector, connect the front windscreen washer pump hose to the washer pump and connect the rear window washer pump hose to the washer pump.
3. Fit the windscreen washer pump - low configuration.
   a. Connect the harness connector and connect the front windscreen washer pump hose to the washer pump.
4. Take away the container for collecting windscreen washer fluid, and dispose of it.
5. Fit the front bumper assembly.

☞ **Front Bumper Assembly Refit**

6. Refill the windscreen washer fluid.
7. Connect the negative battery cable.

Windscreen Washer Pump Hose

Remove

1. Remove the front bumper assembly.

☞Front Bumper Assembly Remove

2. Remove the A/C air inlet grille panel and accessories.

☞A/C Air Inlet Grille Panel and Accessories Remove

3. Place a suitable container for cleaning under the windscreen washer pump to collect the spilled windscreen washer fluid.
4. Disconnect the windscreen washer pump hose from the washer pump, and remove the windscreen washer pump hose.

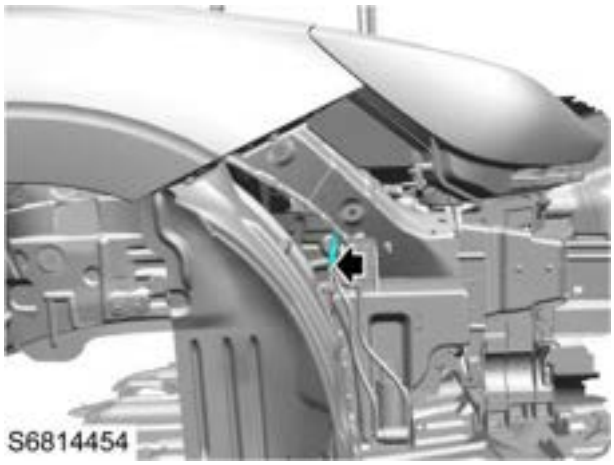

Refit

1. Route a new hose according to the used one, fit a new hose and connect it to the washer pump.
2. Refill the windscreen washer fluid, take away the container for collecting windscreen washer fluid, and dispose of it.
3. Fit the A/C air inlet grille panel and accessories.

☞A/C Air Inlet Grille Panel and Accessories Refit

4. Fit the front bumper assembly.

☞Front Bumper Assembly Refit

Rear Window Wiper Blade Assembly

Remove

1. Lift the rear window wiper arm from the rear window.
2. Pull the joint of the wiper blade and the wiper arm to remove the wiper blade from the wiper arm.

Refit

1. Vertically clamp the rear window wiper blade into the wiper arm clip, and ensure it is clamped in place.
2. Put the wiper assembly back onto the rear window, and check if the wiper blade is fixed correctly to the wiper arm.

Rear Window Wiper Arm Assembly

Remove

1. Pry off the wiper arm shaft cover, and remove 1 nut fixing the rear window wiper arm assembly to the rear wiper motor shaft.

2. Remove the rear window wiper arm assembly with the special tool TBO00015 .

Refit

1. Fix the wiper arm to the wiper motor shaft, and ensure that the adhesive tape of the wiper blade is fitted in its initial position properly and aligned with the wiper mounting/locating dots on the windscreen.
2. Fit 1 nut fixing the wiper arm, tighten it to **7-10Nm** , and check the torque.
3. Fit the wiper arm shaft cover.

Rear Window Wiper Motor

Remove

1. Disconnect the negative battery cable.
2. Remove the rear window wiper arm assembly.

☞ **Rear Window Wiper Arm Assembly Remove**

3. Remove the seal ring of rear wiper motor from the wiper motor output shaft.
4. Remove the tailgate interior trim panel.

☞ **Tailgate Interior Trim Panel Remove**

5. Disconnect the harness connector (1) of the rear wiper motor.
6. Remove 3 bolts (2) fixing the rear wiper motor to the tailgate.
7. Disconnect the rear window washer nozzle hose from the rear window washer motor (3).

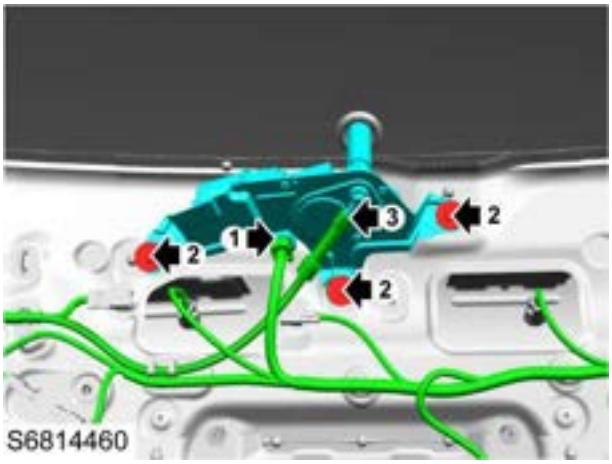

8. Remove the rear window wiper motor assembly.

Refit

1. Fit 3 bolts fixing the rear window wiper motor to the tailgate, tighten them to **7-10Nm** , and check the torque.
2. Connect the rear window washer nozzle hose to the rear window washer motor.
3. Connect the harness connector of the rear window wiper motor.
4. Fit the tailgate interior trim panel.

☞ **Tailgate Interior Trim Panel Refit**

5. Fit the rear wiper motor seal ring.
6. Fit the rear window wiper arm assembly.

☞ **Rear Window Wiper Arm Refit**

7. Connect the negative battery cable.

Rear Window Washer Pump Hose

Remove

1. Remove the front bumper assembly.

☞ Front Bumper Assembly Remove

2. Place a suitable container for cleaning under the windscreen washer pump to collect the spilled windscreen washer fluid.
3. Disconnect the rear window washer pump hose from the rear window washer pump.

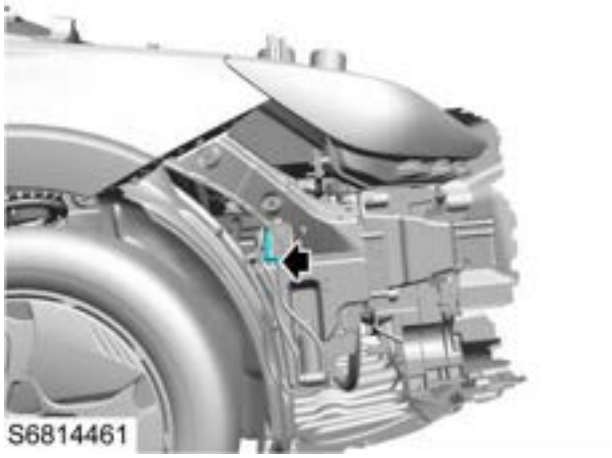

4. Remove the instrument panel lower closure panel.

☞ Instrument Panel Lower Closure Panel Remove

5. Remove the A pillar lower trim panel.

☞ A Pillar Lower Trim Panel Remove

6. Disconnect the rear window washer pump hose from the rear window washer middle connecting hose.

7. Remove the rear window washer pump hose.

Refit

1. Route a new hose according to the used one, fit a new hose and connect it to the washer pump.
2. Connect the rear window washer middle connecting hose to the rear window washer pump hose.
3. Fit the A pillar lower trim panel.

☞ A Pillar Lower Trim Panel Refit

4. Fit the instrument panel lower closure panel.

☞ Instrument Panel Lower Closure Panel Refit

5. Refill the windscreen washer fluid.
6. Take away the container for collecting windscreen washer fluid, and dispose of it.
7. Fit the front bumper assembly.

☞ Front Bumper Assembly Refit

Rear Window Washer Middle Connecting Hose

Remove

1. Remove the A pillar lower trim panel.

A Pillar Lower Trim Panel Remove

2. Place a container at the joint of the rear window washer pump hose and the rear window washer middle connecting hose.
3. Disconnect the rear window washer middle connecting hose from the rear window washer pump hose.

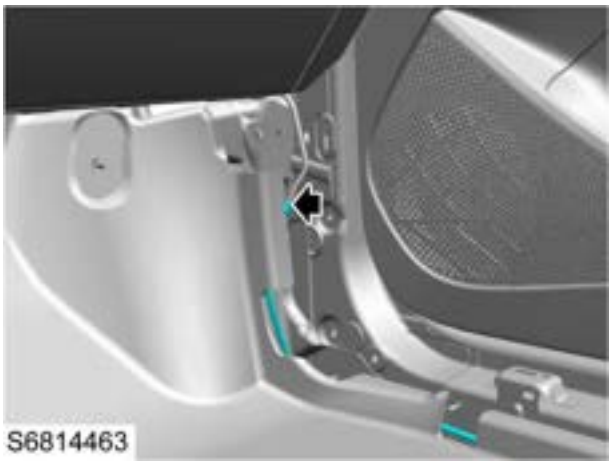

4. Remove the right door sill trim panel.

Door Sill Trim Panel Remove

5. Remove the trunk side trim panel.

Trunk Side Trim Panel Remove

6. Remove the C pillar upper trim panel.

C Pillar Upper Trim Panel Remove

7. Disconnect the rear window washer middle connecting hose from the rear window washer nozzle hose, and remove the rear window washer middle connecting hose.

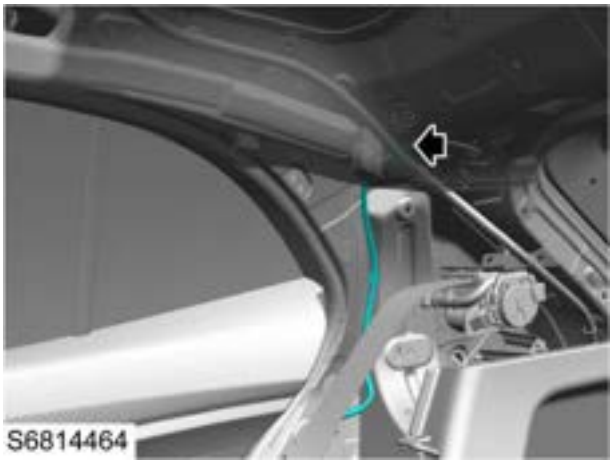

Refit

1. Route the new hose according to the used one.
2. Connect the rear window washer middle connecting hose to the rear window washer nozzle hose.
3. Fit the C pillar upper trim panel.

C Pillar Upper Trim Panel Refit

4. Fit the trunk side trim panel.

Trunk Side Trim Panel Refit

5. Fit the right door sill trim panel.

Right door sill trim panel Refit

6. Connect the rear window washer middle connecting hose to the rear window washer pump.
7. Take away the container for collecting windscreen washer fluid, and dispose of it.
8. Fit the A pillar lower trim panel.

A Pillar Lower Trim Panel Refit

9. Refill the windscreen washer fluid.

Rear Window Washer Nozzle Hose

Remove

1. Remove the roof trim panel assembly.

Roof Trim Panel Assembly Remove

2. Remove the tailgate interior trim panel.

Tailgate Interior Trim Panel Remove

3. Disconnect the rear window washer middle connecting hose from the rear window washer nozzle hose (1).
4. Disconnect the rear window washer nozzle hose from the rear window washer motor (2), and remove the rear window washer nozzle hose.

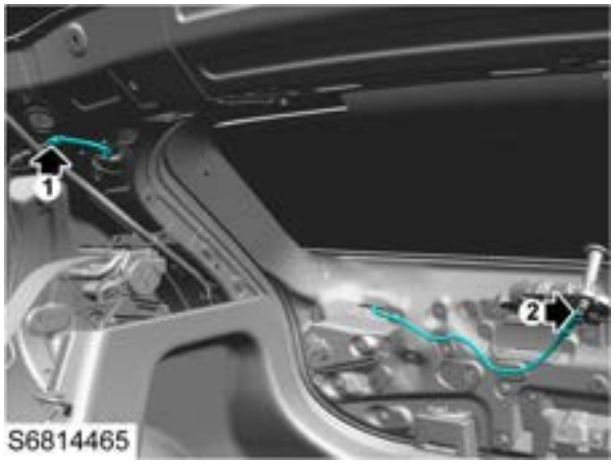

Refit

1. Connect the rear window washer nozzle hose to the rear window washer nozzle.
2. Connect the rear window washer nozzle hose and the rear window washer middle connecting hose.
3. Fit the tailgate interior trim panel.

Tailgate Interior Trim Panel Refit

4. Fit the roof trim panel assembly.

Roof Trim Panel Assembly Refit

Remove

1. Disconnect the negative battery cable.
2. Pry off the clips, and remove the interior rearview mirror cover.

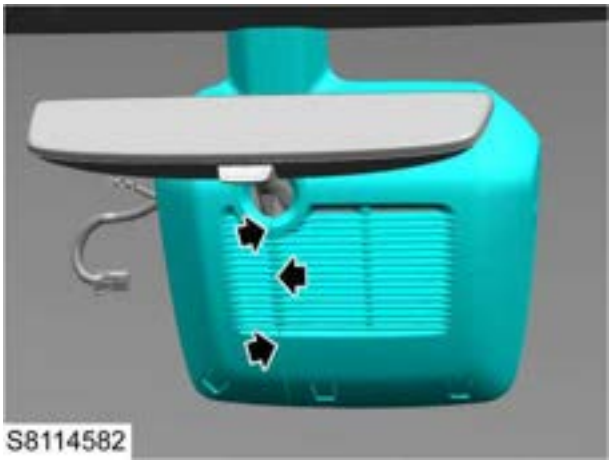

3. Loosen the clips, and remove the rain sensor and disconnect the harness connector.

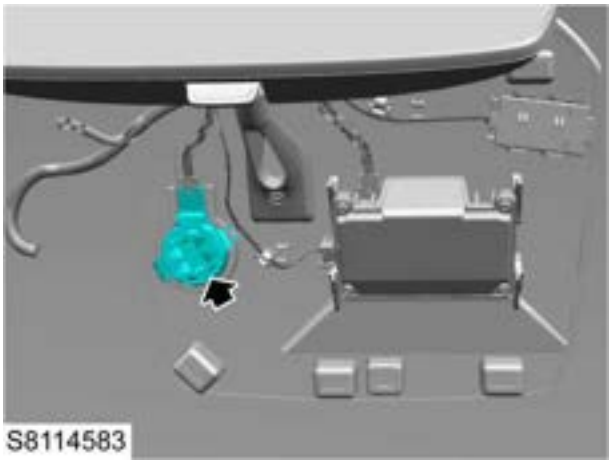

Refit

1. Connect the harness connector of the rain sensor.
2. Locate the rain sensor to the windscreen, and press the clips in place.
3. Fit the interior rearview mirror cover, and press the clips in place.
4. Connect the negative battery cable.

Interior Lighting

Description and Operation

System Layout

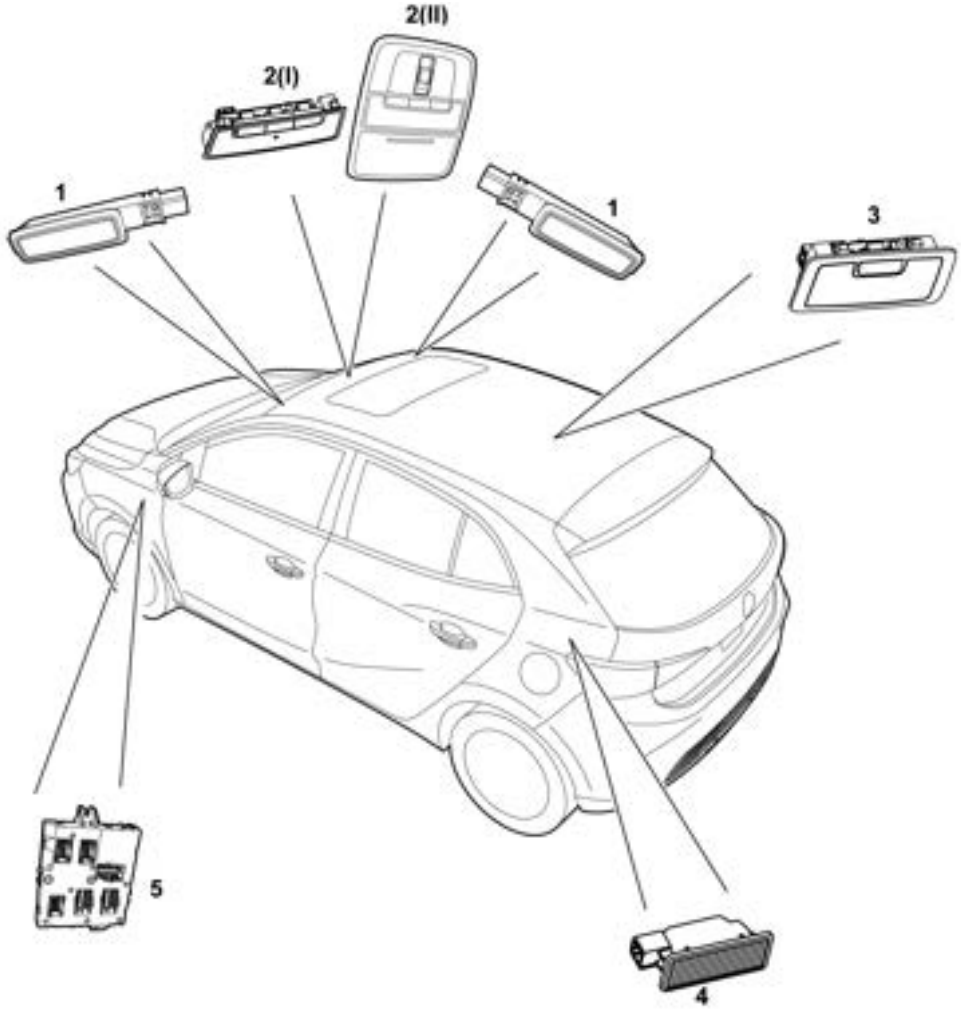

S4413961

1. Makeup mirror light (if any)
2. (I) Front reading light (low configuration)

   (II) Front reading light (high-end)
3. Rear reading light
4. Luggage compartment lights
5. bcm

System Control Diagram

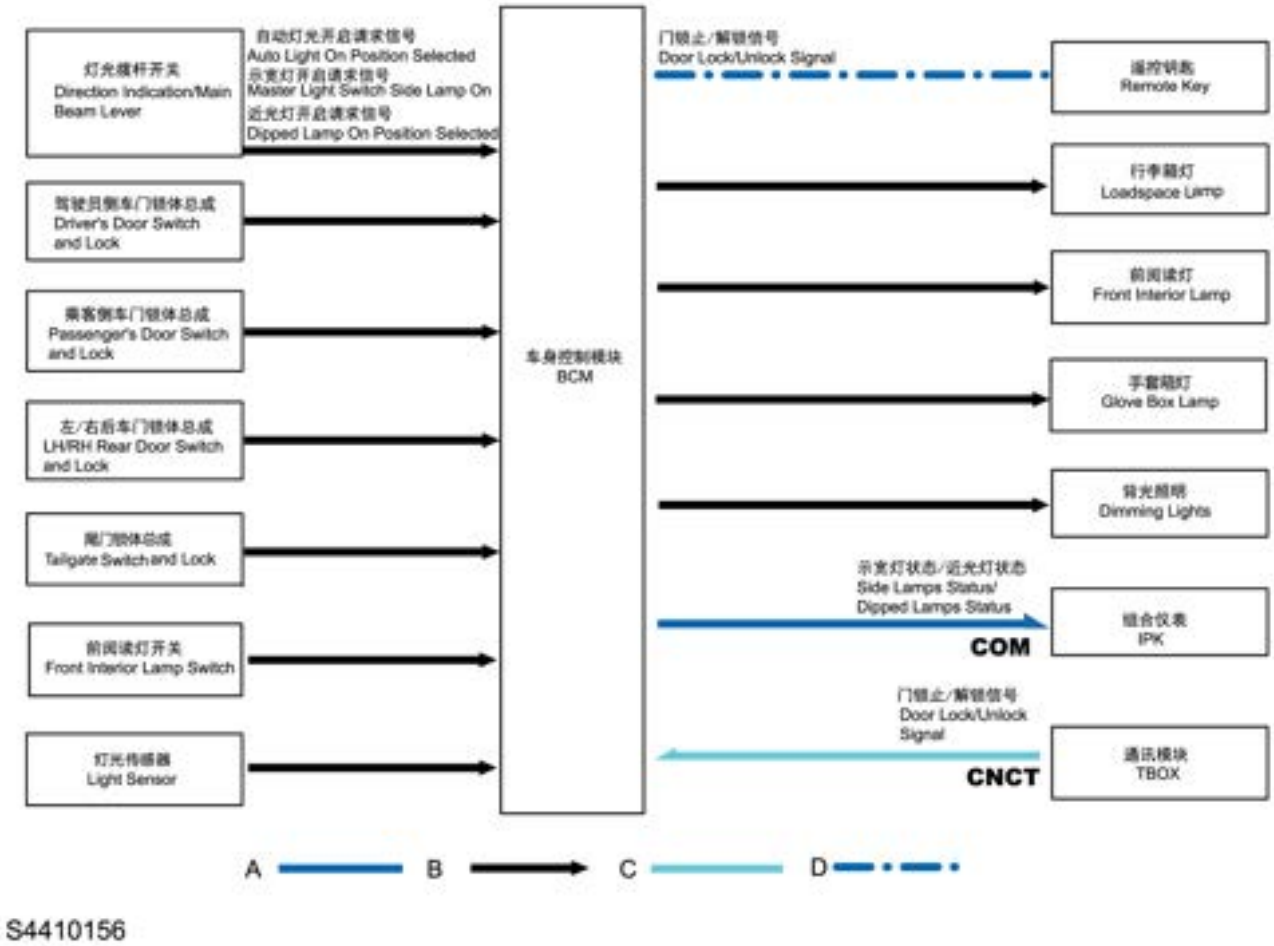

A = Comfort CAN Bus; B = Hard Wire; C = Connection CAN Bus; D = RF Signal

Description

Overview

The interior lighting system is controlled by the body control module (BCM) at the front left panel of the A pillar.

Front Reading Lamp

The front reading lamp is aLED lamp. Depending on the model configuration, the front interior lamp has different styles.

For the models without sunroof, the front reading lamp is fixed on the roof interior trim panel above the windscreen with spring clamps, which can be replaced separately. It is turned on and off by 2 switches on the reading lamp assembly.

For the models with sunroof, the front reading lamp is fitted in the overhead console at the top centre of the windscreen. The front reading lamp is turned on and off by 4 switches on the overhead console assembly. The front reading lamp cannot be fitted/removed separately, which needs to be replaced with the overhead console. The overhead console with glass box is fixed to the roof interior trim panel with 2 screws and spring clamps, while the overhead console without glass box is fixed to the roof interior trim panel with spring clamps.

Trunk Lamp

The trunk lamp is on the trunk side trim panel on the left of the vehicle. The trunk lamp assembly can be replayed by prying it off carefully.

The trunk lamp is aLED lamp. When the trunk is open, the trunk lamp will illuminate automatically.

Vanity Mirror Lamp (if equipped)

The vanity mirror lamp is fitted on the roof interior above the sun visor, with the transparent lens. The vanity mirror lamp assembly can be replaced by prying it off carefully.

The vanity mirror lamp is anLED lamp. When opening the vanity mirror cover, the vanity mirror lamp illuminates automatically.

Ambient Lamp (if equipped)

The ambient lamp assembly is welded on the right instrument panel trim panel, which cannot be fitted/removed separately, but shall be replaced with the trim panel.

The ambient lamp is anLED lamp, and its on/off and illumination can be set with the entertainment system display.

Operation

Overview

Interior Lighting

Interior lighting includes:

- Front Reading Lamp
- Rear Reading Lamp (if fitted)
- Vanity Mirror Lamp (if fitted)
- Trunk Lamp
- Interior Backlight

TheBCM receives signals of the interior lighting system. When theBCM receives the reading lamp switch signal, door switch signal or tailgate switch signal, it will illuminate the corresponding lamp inside the vehicle. When theBCM detects that the headlamp is on or the ambient light is dim with the light sensor, theBCM illuminates the backlight of some interior switches.

Interior Lighting Controlled byPWM

The interior lamps under control ofPWM include the front reading lamp, rear reading lamp (if fitted), trunk lamp and ambient lamp (if fitted). They can be controlled in auto mode or manual mode.

Auto Mode ofPWM Control

No need to manually press the specific switch, theBCM will control the working status of the interior lamp according to the signal received.

The interior lamp will illuminate automatically under the following conditions:

- When pressing the UNLOCK button on the remote key, or unlocking with thePEPS module, the front/rear reading lamps illuminate gradually. If no door is opened within 30s, the front/rear reading lamps will dim gradually.
- When the Start switch is off and the width lamp is on, or the light sensor determines that it is night, the reading lamp will illuminate gradually. If no door is opened within 30s, the reading lamps will dim gradually.
- When the Start switch is turned off within 30s after the width lamp goes out, the reading lamp will illuminate gradually.
- If any door is opened, the reading lamp will illuminate gradually.
- If the interior lamps illuminate, all doors are in closed state, when the Start switch is changed to "OFF" position from "ACC" or "ON" position, the interior lamps will dim gradually in 30s.
- When pressing the LOCK button on the remote key, or locking the door through thePEPS module, the interior lamps will dim gradually.
- When all doors are in the closed state and the Start switch is in "ACC" or "ON" position, the interior lamps will dim gradually.
- If any door is opened, the interior lamps will illuminate and gradually dim in 15min when the energy-saving function of the battery is on.

Note：In auto modePWM control, once the impact sensor is triggered, the interior lamps will illuminate immediately.

Manual ModePWM Control

Press the roof lamp switch to illuminate the corresponding lamp. When the interior lamps are turned on/off manually, the auto delay function will be cancelled.

Manual Shift between Control Modes

Press the master switch on the front reading lamp assembly to activate the auto mode. Press the master switch again to turn off the auto mode.

The interior lighting delay power control includes:

- Front Reading Lamp
- Rear Reading Lamp (if fitted)
- Vanity Mirror Lamp (if fitted)

TheBCM controls the interior lighting system by the relay.

Under the following situations, theBCM controls the delay of the interior lamps through the opening of delay relay.

- When the Start switch is in "ACC" or "ON/RUNNING" position
- When pressing the UNLOCK button on the remote key, or unlocking the door with thePEPS module

The delay function may fail under the following conditions:

- 15min after the Start switch is OFF
- When pressing the LOCK button on the remote key, or locking the door with thePEPS module
- When the vehicle is in anti-theft state
- When the vehicle is locked externally

Interior Backlight Control ofLED

When the width lamp is turned on orBCM determines that the signal of the light sensor is for night driving, the interior backlight illuminates.

Service Guide

Overhead Console Assembly and Sunroof Switch

Remove

1. Disconnect the negative battery cable.
2. Remove the front reading lamp - low configuration.
   a. Pry off the clips, disconnect the harness connector and remove the front reading lamp.

S4413950

3. Remove the front reading lamp - medium configuration.
   a. Open the glasses box, and remove 2 screws fixing the overhead console and switches to the roof.

S4413946

   b. Loosen the clip, disconnect the harness connector on the back and remove the overhead console and switches.
   c. Pry off the clip and remove the front reading lamp.

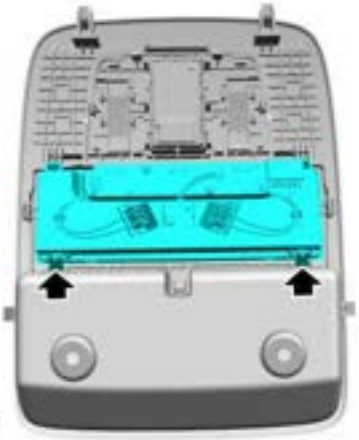

S4413947

   d. Pry off the clip and remove the sunroof switch.

S4413951

4. Remove the front reading lamp - high configuration.
   a. Open the glasses box, and remove 2 screws fixing the overhead console and switches to the roof.

S4413948

   b. Loosen the clip, disconnect the harness connector on the back and remove the overhead console and switches.
   c. Pry off the clip and remove the front reading lamp (1).
   d. Pry off the clip and remove the sunroof switch (2).
   e. Pry off the clip and remove the emergency call switch (3).

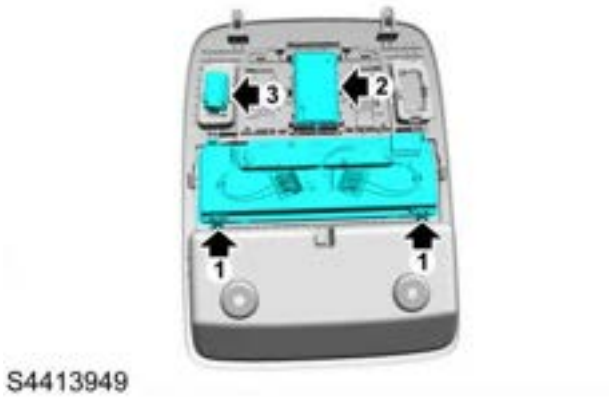

Refit

1. Fit the front reading lamp - high configuration.
   a. Fix the emergency call switch to the overhead console, and press the clips in place.
   b. Fix the sunroof switch to the overhead console, and press the clips in place.
   c. Fix the front reading lamp to the overhead console, and press the clips in place.
   d. Connect the harness connector at the back.
   e. Fix the overhead console to the roof. Fit and tighten 2 screws.
2. Fit the front reading lamp - medium configuration.
   a. Fix the sunroof switch to the overhead console, and press the clips in place.
   b. Fix the front reading lamp to the overhead console, and press the clips in place.
   c. Connect the harness connector at the back.
   d. Fix the overhead console to the roof. Fit and tighten 2 screws.
3. Fit the front reading lamp - low configuration.
   a. Connect the harness connector on the back, fix the front reading lamp to the roof, and press the clips in place.
4. Connect the negative battery cable.

Remove
Refit

Trunk Lamp

Remove

1. Disconnect the negative battery cable.
2. Pry off the clips fixing the trunk lamp to the C pillar upper trim panel.

3. Disconnect the harness connector and remove the trunk lamp assembly.

Refit

1. Connect the harness connector.
2. Fix the trunk lamp to the C pillar upper trim panel, press the clips in place, and fit the trunk lamp assembly.
3. Connect the negative battery cable.

Vanity Mirror Lamp

Remove

1. Disconnect the negative battery cable.
2. Loosen the clip, remove the vanity mirror lamp and disconnect the harness connector.

S4413953

Refit

1. Connect the harness connector.
2. Fit the vanity mirror lamp, and press the clips in place.
3. Connect the negative battery cable.

Remove

1. Disconnect the negative battery cable.
2. Pry off the clips, disconnect the harness connector and remove the rear reading lamp.

3. If necessary, pry open the lamp shade, and pull out the rear reading lamp bulb.

Refit

1. If removed, fit the rear reading lamp bulb and restore the rear reading lamp shade.
2. Connect the harness connector, locate the rear reading lamp to the mounting position, and press the clips in place.
3. Connect the negative battery cable.

Exterior Lighting

Specification

Torque

Description	Value
Bolt- Headlamp to body	3-5Nm
Bolt-Headlamp alignment	0.1-0.5Nm
Bolt-Tail lamp to body	3-5Nm
Nut-Rear position lamp to tail door	2.7-3.3Nm

Description and Operation

System Layout

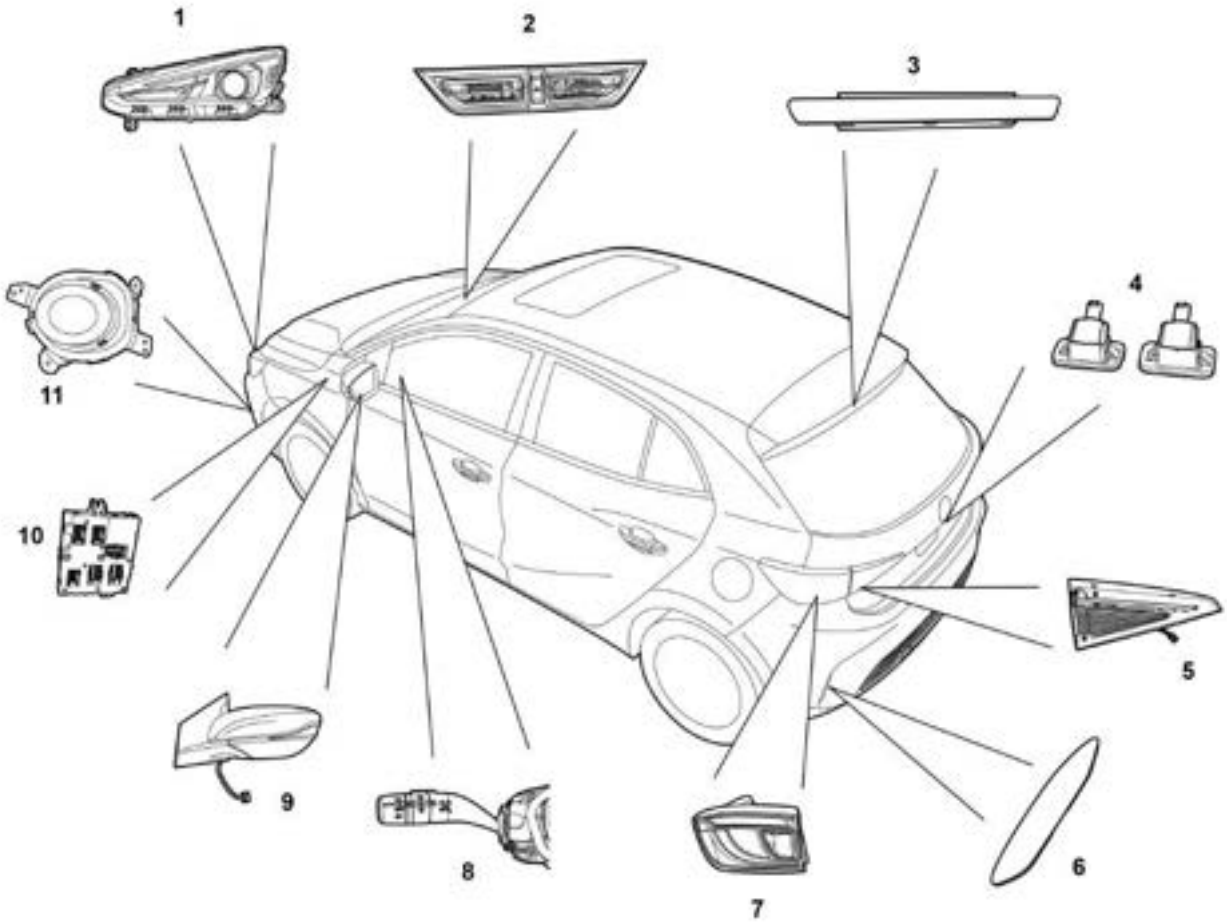

1. Headlamps
2. Hazard warning light switch
3. High mounted brake light
4. Rear license plate light
5. Rear combination lamp
6. reflex reflector
7. tail light
8. Light lever combination switch
9. Side turn signals
10. bcm
11. Front fog lights (if any)

System Control Diagram

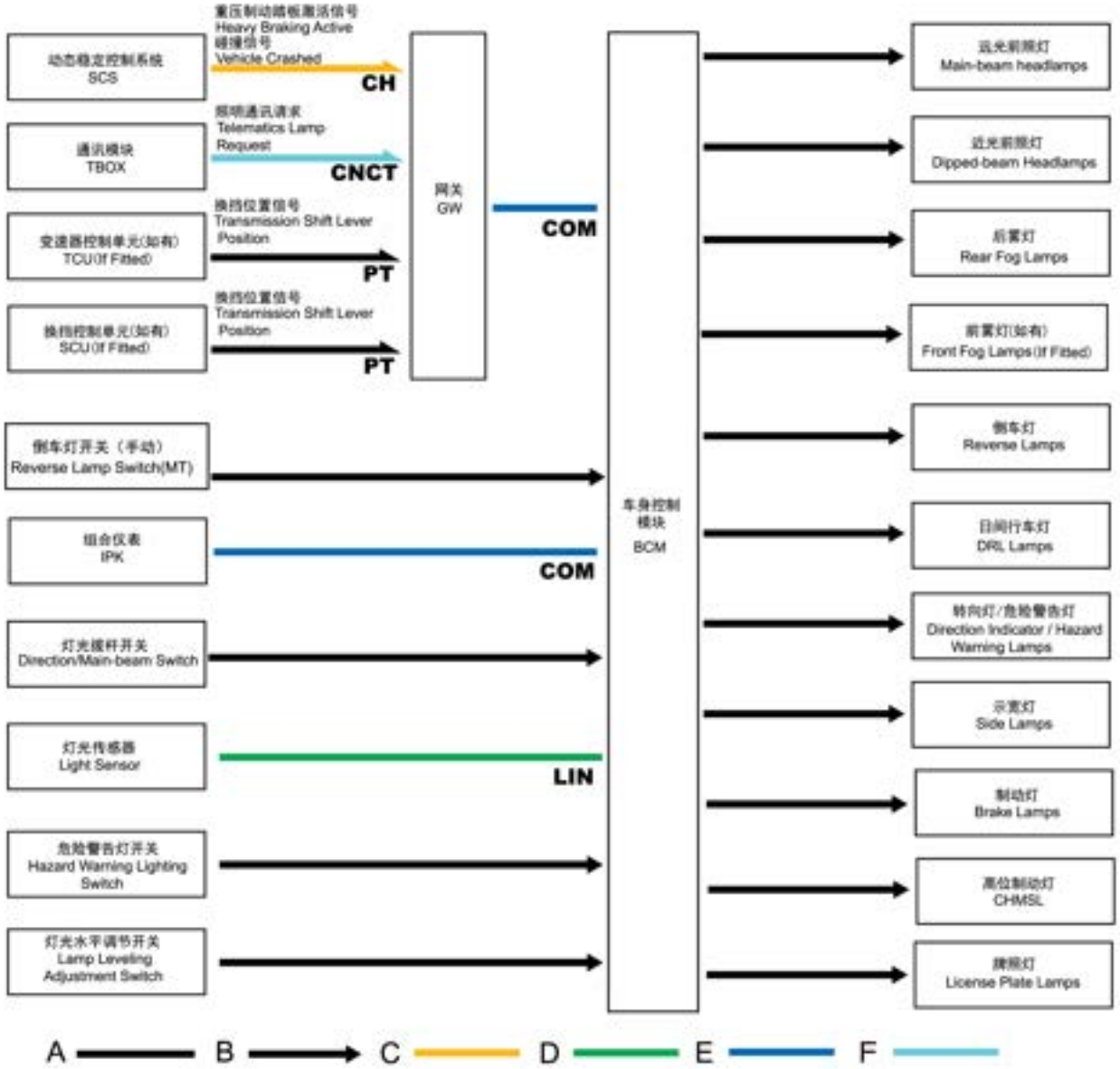

A=Power high-speed CAN line; B=hard wire; C=chassis high-speed CAN line; D=LIN line; E=Comfort CAN line; F=Connect the CAN line

Description

Overview

The external lighting system includes various external lights, which are controlled by the main light switch and automatic light control sensors. The external lighting system includes:

- Headlamps
- tail light
- Rear combination lamp
- Rear license plate light
- High mounted brake light
- Rear fog lights
- Side turn signals
- Front fog lights (if any)

Headlamps

Headlamps

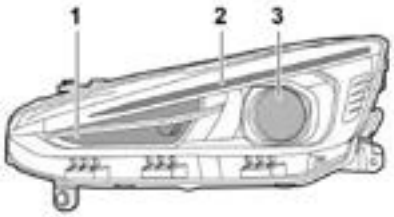

S6514384

1. Turn signal (bulb)
2. Daytime running lights/position lights LED (light-emitting diode)
3. High and low beam lights (bulbs)/LED (light-emitting diode)

The headlights have a total of 4 fixing bolts, 2 bolts installed on the front end module, 1 bolt installed on the front bumper side bracket, and 1 bolt installed on the fender.

The headlight assembly includes daytime running lights/position lights, turn signals, and high and low beam lights.

tail light

S6514385

1. Position light LED (light-emitting diode)
2. Position light/brake light (bulb)
3. Turn signal (bulb)

The tail lights are fixed to the body side panel with 2 bolts.

The tail light assembly includes position lights, brake lights, and turn signals.

Rear combination lamp

S6514386

1. Position light LED (light-emitting diode)
2. Rear fog lamp (bulb)
3. Reverse light bulb

The lighting configuration of this car model is "left fog and right reverse", with symmetrical positions on both sides.

The rear combination light is installed on the tailgate with three nuts.

The rear combination lights include position lights, rear fog lights, and reverse lights.

Front fog lights (if any)

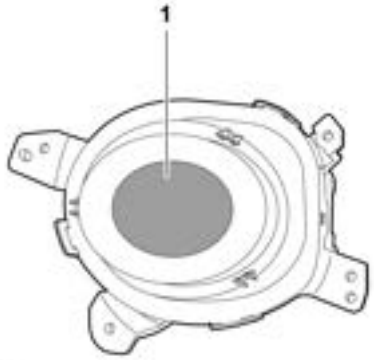

S6514409

1. Front fog lamp (bulb)

The front fog lamp is installed on the front bumper with 4 screws.

Rear license plate light

Two rear license plate lights are installed on the rear license plate trim panel, located on both sides of the tailgate switch, with bulbs inside.

Side turn signals

The side turn signal light is an LED (light-emitting diode) light, fixed on the exterior rearview mirror.

High mounted brake light

The high mounted brake light is an LED (light-emitting diode) light located on the upper part of the rear windshield, fixed to the spoiler by three screws, which are visible after removing the upper trim panel of the tailgate.

Main light switch

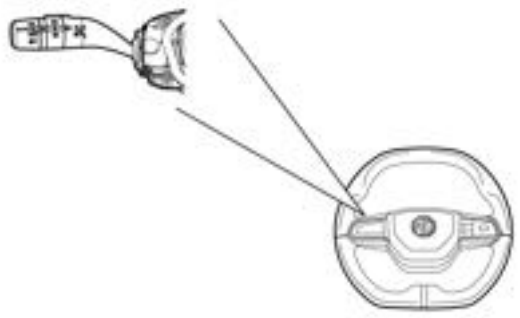

S6514409

The main light switch is located on the left-hand side of the steering wheel and is used to control external lighting.

Bulb specifications

lighting	Bulb Type	voltage power
High and low beam lights*	HB3 55/60W	12V 55/60W
Front fog lights (if any)	H8	12V 35W
turn signal	PY21W	12V 21W
Rear position light/brake light	W21/5W	12V W21/5W
Rear turn signal	WY16W	12V 16W
Rear fog lights	W21W	12V 21W
Reverse lights	W16W	12V 16W
Rear license plate light	W5W	12V 5W

Operation

Overview

Exterior Lighting Control and Detection

TheBCM controls the following exterior lamps

- High Beam Headlamp
- Low Beam Headlamp
- Rear Fog Lamp
- Reverse Lamp
- License Plate Lamp
- Width Lamp/Daytime Running Lamp
- Direction Indicator Lamp/Hazard Warning Lamp
- Brake Lamp/High-mounted Stop Lamp

Automatic Light Control

When the "AUTO" position is selected on the instrument panel touch switch, the light sensor will turn on or off the headlamps automatically by sensing the intensity of the outside light (visible light).

The following are the illumination in different positions with "AUTO" selected at night:

- When the Start switch is OFF, the low beam headlamp and the width lamp do not illuminate.
- When the Start switch is in "ACC" position, the width lamp illuminates.
- When the Start switch is in "ON/RUNNING" position, the low beam headlamp and the width lamp illuminate.

Intelligent High Beam (If equipped)

Under automatic control, when the low beams are turned on, the front view camera module (FVCM) will detect light signals ahead and transmit them to theBCM . TheBCM will turn on/off the high beams, and the corresponding intelligent high beam indicator on the instrument pack will illuminate.

The intelligent high beam function will be activated when the following conditions are met at the same time:

1. The light stalk switch is in “AUTO” position and the low beams are turned on automatically.
2. The vehicle is travelling at a speed of over 40km/h.

Under automatic control, and the low beams are on, if the road ahead is dark, the system will turn on the high beams. The high beams will be automatically switched to the low beams if any of the following conditions occurs:

- Headlamps of the approaching vehicle from the opposite direction are detected by the front view camera module.
- Tail lamps of the vehicle ahead in the same direction are detected by the front view camera module.
- The surroundings are bright enough (such as street lamps) and no high beams are required.
- The vehicle speed drops below 40km/h.

Under automatic control, the working state of manual switching of high/low beam is:

- With the intelligent high beam function activated, the system will not deactivate the intelligent high beam function when continuously moving the high/low beam switch within 2 seconds.
- With the intelligent high beam function activated, when moving the high/low beam switch for 2 consecutive times with an interval of more than 2 seconds, the intelligent high beam function will be deactivated. It can be re-activated when the high/low beam switch is continuously moved within 2 seconds next time or the vehicle is restarted and "AUTO" is selected again.

Note : The intelligent high beam function can be activated up to three times in a starting cycle.

The intelligent high beam function cannot be switched automatically in the following conditions, and manual switching of high/low beam is required:

- Sensor vision is affected by severe weather such as dense fog, heavy rain, and heavy snow.
- Travelling in the moonlight or in the circumstances with weak road lighting ahead, or in the areas with poor lighting but lots of buildings.
- Travelling on the high-reflection road, for example, after the rain, snow or other high-reflection conditions.
- When there are high-reflection objects near the road such as traffic signs.
- Distinct light source, such as external devices, exists in the vicinity of the windscreen sensor, resulting in sensor dazzling.
- The windscreen is dirty, broken or vision-blocked due to objects in front of the sensor.
- The lamplight of other vehicles cannot be detected due to the missing, broken, blocked or partly blocked lamp, or other causes.
- When the headlamps and tail lamps of other vehicles cannot be detected due to high/low sensor view when the car is driving on/away from the steep hill, or bears heavy load or is driving in the pit.
- Travelling on a curving road or on a mountain road.

Brake Lamp

The brake lamp switch has two pedal status outputs, one signal is sent to theBCM , and the other is sent to theECM .

Emergency Brake Lamp

The brake lamp or hazard warning lamp will flash under the following conditions:

1. The brake lamp switch inputs activation signal.
2. TheABS orSCS sends the relevant activation signal.

When the emergency brake is activated, if the hazard warning lamp is working, the emergency brake lamp will not flash.

If the activated hazard warning lamp causes failure of the emergency brake lamp, the emergency brake lamp will not flash again after the hazard warning lamp is cancelled unless the above conditions are met.

The emergency brake lamp can be activated only when the vehicle speed exceeds 50km/h. With the emergency brake lamp activated, when theABS activation signal/hard brake activation signal disappears and the vehicle speed is greater than 2km/h, the emergency brake lamp will go out after illumination for 2s. With the emergency brake lamp activated, when theABS activation signal/hard brake activation signal disappears and the vehicle speed is less than 2km/h, the emergency brake lamp will go out after illumination for 5s.

With the vehicle speed less than 10km/h for more than 1s, if the emergency brake lamp goes out, the hazard warning lamp will be activated automatically; before the vehicle speed drops below 10km/h, if the emergency brake lamp stops flashing, the hazard warning lamp will not be activated automatically even if the vehicle speed is already below 10km/h. If the hazard warning lamp is activated, press the hazard warning lamp switch or keep the vehicle speed above 20km/h for more than 5s or restart the vehicle, and the hazard warning lamp will go out.

When theSCS cannot receive any activation signal for the hard brake, theBCM can illuminate the emergency brake lamp as per the acceleration signal of theSCS .

Brake Lamp Activation Request from Other Systems

When theBCM receives the brake lamp activation request signals from theSCS ,EPB , andFVCM , theBCM will illuminate the brake lamp based on the validity of these signals.

Direction Indicator Lamp

When the Start switch is in "ON/RUNNING" position and the light stalk switch is moved to the left/right turn position, theBCM flashes the corresponding direction indicator lamp by identifying the switch status of the direction indicator lamp. Then the direction indicator lamp on the instrument pack flashes and provides the current status of the direction indicator lamp for the driver by acoustic warning.

Rear Fog Lamp

When the Start switch is in "ON/RUNNING" position, the low beam headlamp is enabled, then the activation of the rear fog lamp switch can illuminate the rear fog lamp. When the rear fog lamp switch or low beam headlamps are turned off, the rear fog lamps go out. If the rear fog lamps are already activated at the time of engine start, they will remain ON.

Hazard Warning Lamp

The hazard warning lamps are comprised of the front/rear direction indicator lamps and side direction indicator lamps.

The hazard warning lamp switch is marked with a triangle, which is a touch switch. When the hazard warning lamp is activated, the triangle mark will flash. When the width lamps or headlamps are turned on, the triangle mark dims but still flashes. The hazard warning lamp can be activated manually regardless of current position of the Start switch.

Operation Priority of Direction Indicator Lamp and Hazard Warning Lamp

If the direction indicator lamp switch is enabled when the hazard warning lamp is working, the direction indicator lamp will cancel the hazard warning lamp. Then, the hazard warning lamp will still flash after the direction indicator lamp switch or the Start switch is turned off.

If the hazard warning lamp switch is enabled when the direction indicator lamp is working, the hazard warning lamp will replace the direction indicator lamp. The direction indicator lamp will resume after the hazard warning lamp is disabled.

The hazard warning lamp can be activated automatically under the following situations:

In case of an impact: when theBCM detects an impact signal, it will flash the hazard warning lamp automatically for warning. Accidental activation of the hazard warning lamp during an impact can be cancelled by pressing the hazard warning lamp switch for more than 5s.

Low Beam Headlamp

When the Start switch is in "ON/RUNNING" position, and the Low Beam is selected on the instrument panel touch panel switch, theBCM closes the low beam relay and illuminates the low beam headlamps.

High Beam Headlamp

When the Start switch is in "ON/RUNNING" position, theBCM closes the high beam relay and illuminates the high beam headlamps by identifying the status of the light stalk switch.

Width Lamp

When the Auto, Width Lamp or Low Beam is selected on the instrument panel touch panel switch, the width lamps illuminate. When only the width lamps are on, the daytime running lamp will illuminate to supplement the light source.

With "AUTO " selected on the instrument panel touch panel switch, when theBCM receives the "Outside Light Intensity Low" signal from the light sensor, it will illuminate the width lamps automatically.

Reverse Lamp

When the Start switch is in "ON/RUNNING" position, and theTCM detects that the shift lever is in "R" position, it will send the reverse signal to theBCM through theCAN bus. Once theBCM determines that the reverse signal is valid, it will illuminate the reverse lamps immediately. When theBCM

detects that the signal is invalid (the Start switch is not in "ON/RUNNING" position or the shift lever is not in the "R" gear), it will turn off the reverse lamps.

Note : For vehicles with automatic transmission, to avoid shifting to "R" gear and illuminating the reverse lamp accidentally during the gear shift, after theBCM detects that the shift lever is held in "R" gear for more than 1s, it will illuminate the reverse lamp.

Additional Functions

Vehicle Locating Function

This function helps the driver to quickly locate his car with the body lamp during night driving. The response mode of the vehicle locating function can be set: (Lamps only/Lamps + Horn). After the vehicle is locked for several minutes, the vehicle locating function is enabled and the audible and visual warning is triggered by pressing the LOCK button on the remote key. When the LOCK button is pressed again, the vehicle locating function can be disabled. Press the UNLOCK button to cancel the vehicle locating function.

Follow Me Home

When the driver turns off the Start switch and is about to leave the vehicle, the Follow Me Home function can control the timed illumination of the low beam headlamp and width lamp to illuminate the area around the vehicle. The duration of the illumination (0 - 90s) can be set according to individual needs (increase at an increment of 30s). If the door is opened after the Follow Me Home timer is working, the timer will repeat the operation.

TheBCM can identify the status of the Follow Me Home function according to the activation signal of this function.

The Follow Me Home function can be set by manual mode as follows:

After the Start switch is off, turn the light stalk switch to the steering wheel, the system enters the Follow Me Home mode.

With the Follow Me Home activated, pull the light stalk switch or change the position of the Start switch to disable the Follow Me Home.

When the enabled Start switch, alternator failure or battery overdischarge is detected, the Follow Me Home function cannot work properly.

License Plate Lamp

The license plate lamp is controlled by theBCM . As long as the Width Lamp or Headlamp is selected on the instrument panel touch panel switch, the license plate lamp illuminates.

Daytime Running Lamp

TheBCM controls the daytime running lamp via the HSD circuit. When the Start switch is in "ON/RUNNING" position, and the light sensor determines that it is daytime, the daytime running lamp illuminates. When the low beam is turned on, the daytime running lamp goes out automatically.

Lamp of Security System

If a valid request signal of external locking is received, and the vehicle security system is enabled, the vehicle is locked or enters the complete anti-theft state, theBCM will control the direction indicator lamp to flash 3 times.

If the anti-theft function of the security system is cancelled, the direction indicator lamps give 1 flash.

If the vehicle is not fully locked (bonnet, tailgate and doors are open), the direction indicator lamp will not flash.

Service Guide

Headlamp Assembly

Remove

1. Remove the front bumper assembly.

☞ Front Bumper Assembly Remove

2. Remove 1 bolt (1) fixing the headlamp assembly to the front bumper side bracket.
3. Remove 1 bolt (2) fixing the headlamp assembly to the fender.
4. Remove 2 bolts (3) fixing the headlamp assembly to the front-end module.

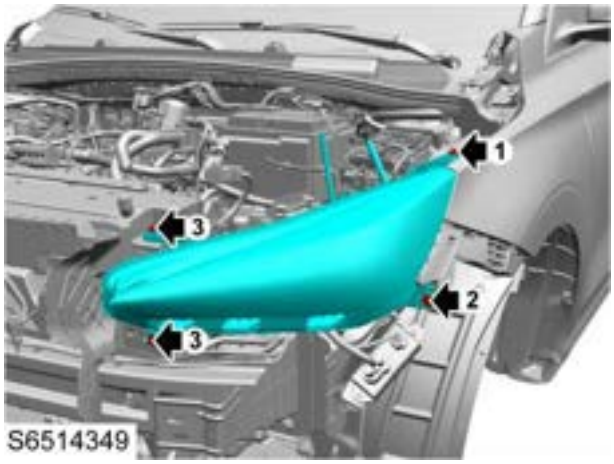

5. Disconnect the harness connector and remove the headlamp assembly.

Refit

1. Connect the harness connector.
2. Align the headlamp assembly with the mounting points, fit 4 bolts, close the bonnet, and check and adjust the surface difference between the headlamp and the bonnet and fender according to the front end information.

☞ Front End Information

3. Tighten the mounting bolts to **3-5Nm** , and check the torque.
4. Fit the front bumper assembly.

☞ Front Bumper Assembly Refit

5. Check if the headlamp is aligned.

☞ Headlamp Lighting Calibration Inspection Adjustment

Remove

1. Disconnect the negative battery cable.
2. Remove the front bumper assembly.

☞Front Bumper Assembly Remove

3. Remove 4 screws fixing the front fog lamp assembly to the front bumper.

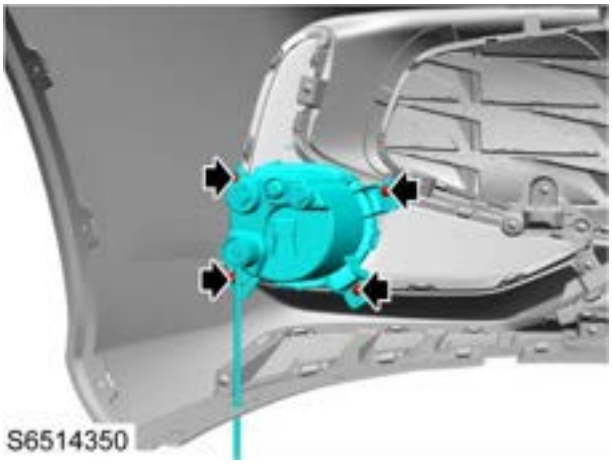

4. Remove the front fog lamp assembly.

Refit

1. Fix the front fog lamp assembly to the front bumper, fit and tighten 4 screws.
2. Fit the front bumper assembly.

☞Front Bumper Assembly Refit

3. Connect the negative battery cable.

Side direction indicator lamp

Remove

1. Disconnect the negative battery cable.
2. Remove the exterior rearview mirror cover.

Exterior Rearview Mirror Cover Remove

3. Remove 2 screws fixing the side direction indicator lamp to the exterior rearview mirror assembly.

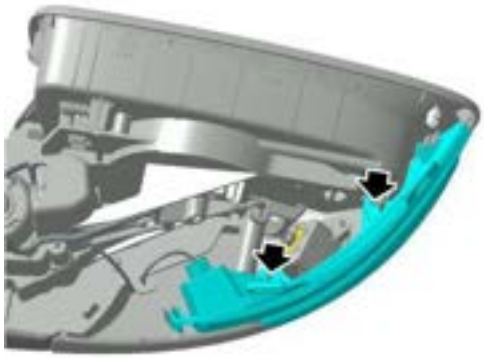

S6514351

4. Pry off the clips along the edge of the side direction indicator lamp, disconnect the harness connector and remove the side direction indicator lamp assembly.

Refit

1. Connect the harness connector, fix the side direction indicator lamp to the exterior rearview mirror, and press the clips in place.
2. Fit and tighten 2 screws fixing the side direction indicator lamp to the exterior rearview mirror.
3. Fit the exterior rearview mirror cover.

Exterior Rearview Mirror Cover Refit

4. Connect the negative battery cable.

Headlamp Lighting Calibration

Inspection

1. Unload the cargo in the vehicle to empty it.
2. Turn on the low beam and allow the beam to fall on the screen 10m away.
3. Adjust the low beam in the vertical direction to ensure that the height of the cut-off line inflection point of the low beam is between 727mm and 827mm (i.e., between 150mm below H and 50mm below H, and the theoretical height of the cut-off line inflection point of the low beam is H=877mm).
4. Adjust the low beam in the horizontal direction to ensure that the cut-off line inflection point of the low beam deviates to the left or the right by no more than 170mm (the theoretical distance between the cut-off line inflection points of the left and right low beams is 1490mm).
5. The headlamp high/low beam bulb is a bulb which needs to adjust the low beam only.

Note：The adjustment of beam illumination location shall comply with GB 7258-2017 Technical specifications for safety of power-driven vehicles operating on roads.

Adjustment

Warning：The light deflection caused by the mounting bracket deformation or abnormal lamp mounting position can't be corrected by normal adjustment and the excessive adjustment will break the lamp.

1. Turn the adjusting screw (1) to adjust the high/low beam in horizontal direction, with a torque of **0.1-0.5Nm** .
2. Turn the adjusting screw (2) to adjust the high/low beam in vertical direction, with a torque of **0.1-0.5Nm** .

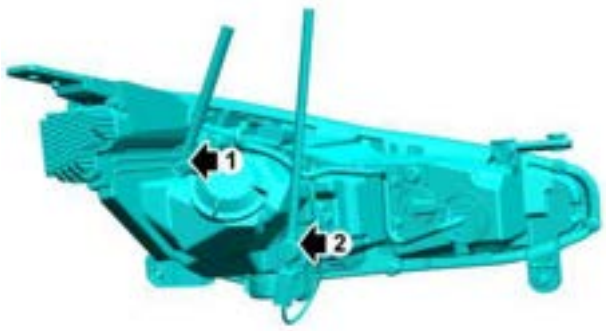

S6514352

Tail Lamp Assembly

Remove

1. Disconnect the negative battery cable.
2. Open the tailgate and remove the tail lamp bolt cover.

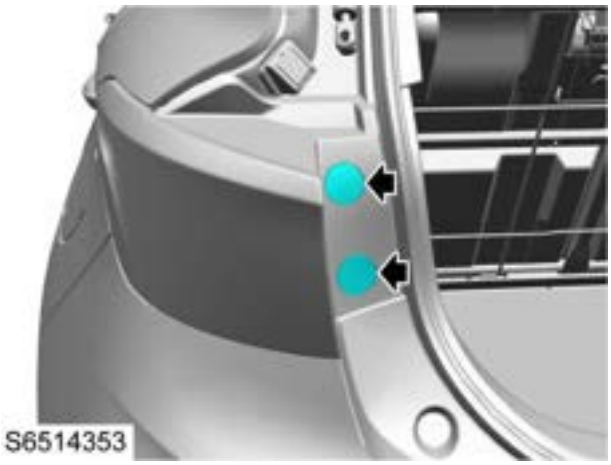

3. Remove 2 bolts fixing the tail lamp assembly to the body.

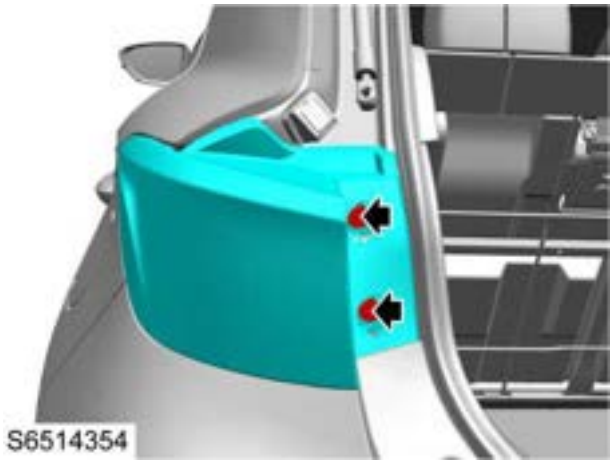

4. Disconnect the harness connector and remove the tail lamp assembly.

Refit

1. Connect the harness connector and locate the tail lamp assembly to the body.
2. Fit 2 bolts fixing the tail lamp assembly to the body, tighten them to **3-5Nm** , and check the torque.
3. Fit the bolt trim cover of the tail lamp, close the tailgate and connect the negative battery cable.

Rear Combination Lamp Assembly

Remove

1. Disconnect the negative battery cable.
2. Remove the tailgate interior trim panel.

☞Tailgate Interior Trim Panel Remove

3. Pry off the clips along the edge of the left/right rear combination lamp trim cover, and remove the left/right rear combination lamp trim cover.

4. Remove 3 nuts fixing the left/right rear combination lamp to the tailgate.

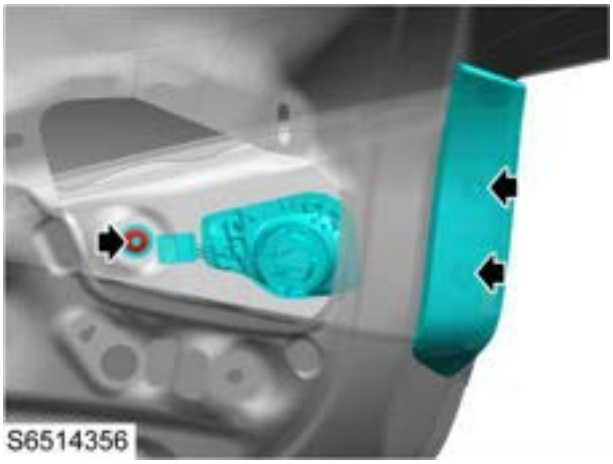

5. Disconnect the harness connector and remove the left/right rear combination lamp assembly.

Refit

1. Connect the harness connector and locate the left (right) rear combination lamp assembly to the tailgate.
2. Fit 3 nuts fixing the left (right) rear combination lamp to the tailgate, tighten them to **2.7-3.3Nm** , and check the torque.
3. Locate the left (right) rear combination lamp trim cover to the door, and press the clips in place.
4. Fit the tailgate interior trim panel.

☞Tailgate Interior Trim Panel Refit

5. Connect the negative battery cable.

Remove

1. Disconnect the negative battery cable.
2. Remove the rear bumper.

☞ Rear Bumper Remove

3. Remove 2 screws fixing the left/right reflex reflector to the rear bumper assembly.

4. Remove the left/right reflex reflector.

Refit

1. Locate the left (right) side reflex reflector to the rear bumper assembly.
2. Fit and tighten 2 screws fixing the left (right) side reflex reflector to the body.
3. Fit the rear bumper.

☞ Rear Bumper Refit

4. Connect the negative battery cable.

Remove

1. Disconnect the negative battery cable.
2. Remove the tailgate interior trim panel.

Tailgate Interior Trim Panel Remove

3. Disconnect the harness connector, pry off the clips and remove the rear license plate lamp assembly.

Refit

1. Fix the rear license plate lamp assembly to the tailgate, press the clip in place, and connect the harness connector.
2. Fit the tailgate interior trim panel.

Tailgate Interior Trim Panel Refit

3. Connect the negative battery cable.

High-mounted Stop Lamp Assembly

Remove

1. Disconnect the negative battery cable.
2. Pry open the clips along the edge of the tailgate upper trim panel, disconnect the harness connector, and remove the tailgate upper trim panel.

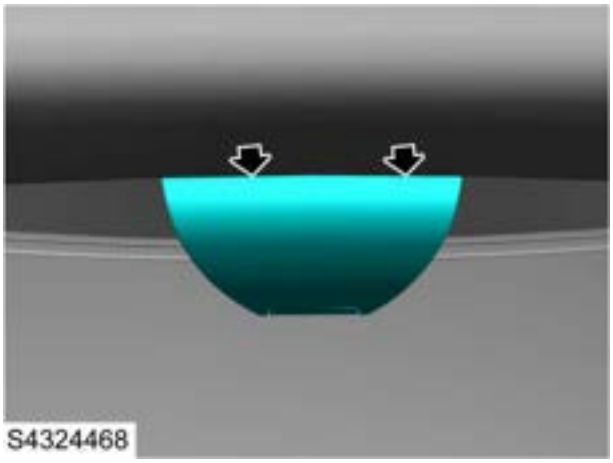

3. Remove 3 screws fixing the high-mounted stop lamp to the tailgate upper trim panel.

4. Remove the high-mounted stop lamp assembly.

Refit

1. Locate the high-mounted stop lamp assembly to the tailgate upper trim panel.
2. Fit and tighten 3 screws fixing the high-mounted stop lamp to the tailgate upper trim panel.
3. Connect the harness connector, locate the tailgate upper trim panel to the mounting position, and press the clips in place.
4. Connect the negative battery cable.

Remove

1. Disconnect the negative battery cable.
2. Remove the driver side knee baffle assembly.

Driver Side Knee Baffle Assembly Remove

3. Loosen the clip and remove the headlamp levelling switch.

Refit

1. Locate the headlamp leveling switch to the driver side knee baffle, press the clips, and ensure that the clips are fully engaged.
2. Fit the driver side knee baffle assembly.

Driver Side Knee Baffle Assembly Refit

3. Connect the negative battery cable.

Door Sheet Metal and Accessories

Specification

Torque

Description	Value
Bolt-door hinge to door	40-50Nm
Bolt-door lock catch to body	19-25Nm
Screw-stop screw	20-26Nm
Bolt-door checker to body	19-25Nm
Bolt-door hinge to body	30-36Nm
Screw-glove box window trim frame to instrument panel frame	1.4-1.8Nm
Screw-door outer handle panel to door	2-2.5Nm
Bolt-door checker to door	7-10Nm
Screw-Multi-range Speaker to Front Door	1-2NM
Bolt-door lock to door	7-10Nm
Bolt-rear door hinge to door	40-50Nm
Bolt-rear door hinge to body	30-36Nm
Bolt-rear door checker to body	19-25Nm
Bolt-rear door lock to door	7-10Nm
Screw-rear door outer handle panel to door	2-2.5Nm
Nut-door checker to door	7-10Nm
Screw-Multi-range Speaker to Rear Door	1-2NM

Service Guide

Front Door Adjustment

Front Door Hinge Adjustment

1. Open the front door.
2. Put the wood block on the jack, and put the jack below the door to support the front door.
3. Unscrew 2 bolts fixing the upper and lower front door hinges to the front door.

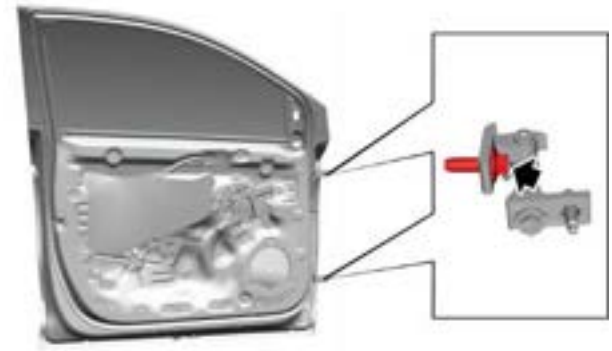

SC115208

4. Use the jack to support and adjust the front door.
5. Pre-tighten the hinge bolts.
6. Remove the jack, and close the door to check the adjustment.
7. When the desired adjustment is achieved, tighten the bolt fixing the hinge to the door side to the specified torque of **40-50Nm** , and check the torque.

Front Door Striker Adjustment

The front door striker is a latch with two screws. In most cases, it is necessary to adjust the striker upward/downward or inward/outward:

- Frame damage resulting from a collision
- Fit a new door weatherstrip
- Customer's repair request for excessive wind noise

Adjust the door striker upward/downward or inward/outward according to the following procedures:

1. Position the door correctly.
2. Open the front door.
3. Loosen 2 striker bolts. Adjust the striker to align the door pin, then pre-tighten the bolts.

SC115196

4. Close the door, and check if the rear of the door is flush with the sheet metal of the body side panel and if the door can be opened and closed normally.
5. After the adjustment, open the door, tighten the bolts fixing the strikers to the body to **19-25Nm** , and check the torque.
6. Close the door.

Front Door Hinge

Remove

1. Disconnect the negative battery cable.
2. Open the front door.
3. Remove and discard 1 bolt fixing the door check to the body side.

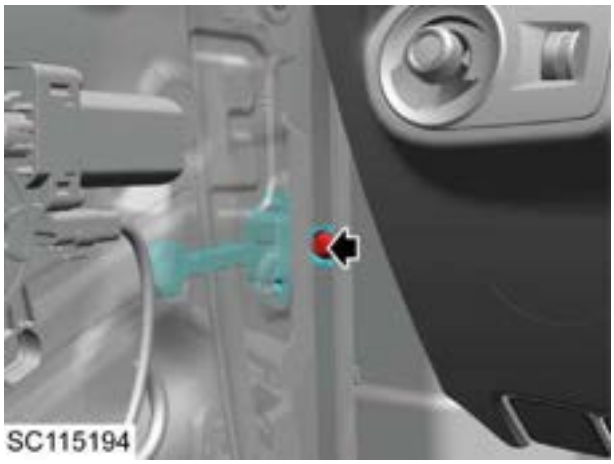

4. Remove the anti-rotation bolts fixing the two hinge flaps in the middle of the upper and lower hinges.

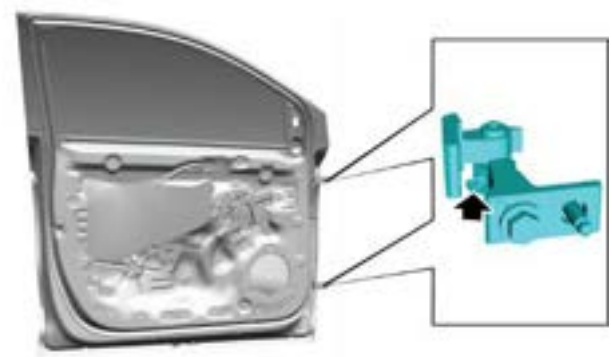

Caution : Protect the paint from scratch when removing or fitting the door assembly.

5. Pry off the rotubber seal ring on the body side, pull out the connector, and disconnect the harness connector.

6. Lift the front door up, separate the flaps of the upper and the lower hinges, and remove the front door assembly.

Refit

1. Fix the upper and lower hinge flaps to the door, fit 2 bolts, and leave them untightened for now.
2. With assistance, fit the door to the body through the assembly of hinge flaps and body hinge flap, fit 2 anti-rotation bolts, tighten them to **20-26Nm** , and check the torque.
3. Connect the harness connector, and insert the rubber seal ring into the mounting hole in the body.
4. Fit 1 new bolt fixing the door check to the body side, tighten it to **19-25Nm** , and check the torque.
5. Adjust the opening and closing performance of the door.

☞ Front Door Hinge Adjustment

6. Connect the negative battery cable.

Front Door Assembly
Remove

1. Open the front door.
2. Remove the front door assembly.

☞ **Front Door Assembly Remove**

3. Remove and discard 2 bolts fixing the upper hinge to the door side from the outside of the door, and remove the front door upper hinge.

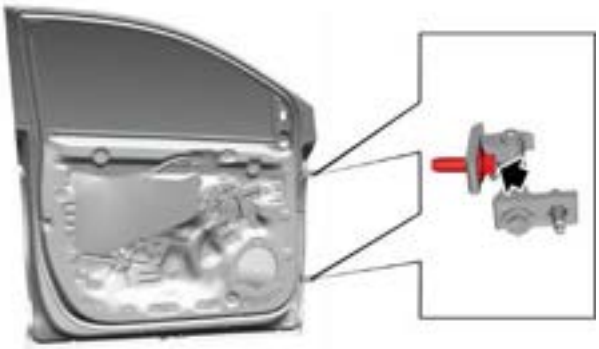

SC115208

4. Remove the front door hinge assembly - driver side.
   a. Remove the driver side lower closure panel assembly.

☞ **Driver Side Lower Closure Panel Assembly Remove**

   b. Remove the body control module.

☞ **Body Control Module Remove**

   c. Remove the A pillar lower trim panel.

☞ **A Pillar Lower Trim Panel Remove**

   d. Remove 1 nut fixing the driver compartment fuse box to the instrument panel beam and remove the driver compartment fuse box.

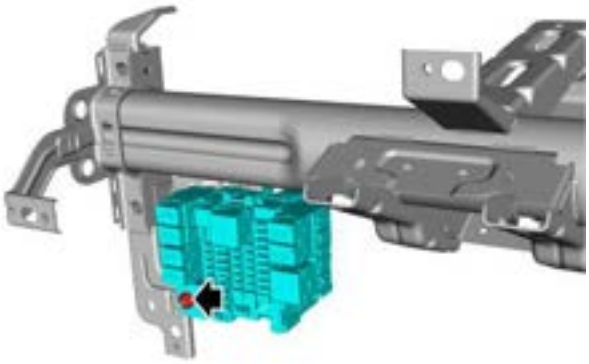

S4114579

   e. Loosen the clip, tear off the screw hole gasket to expose the tool hole.
   f. Remove 2 bolts (1) fixing the lower hinge to the body side from the outside of the body and discard them.
   g. Remove and discard 2 bolts (2) fixing the lower hinge to the body side from the inside of the body, and remove the driver door lower hinge.

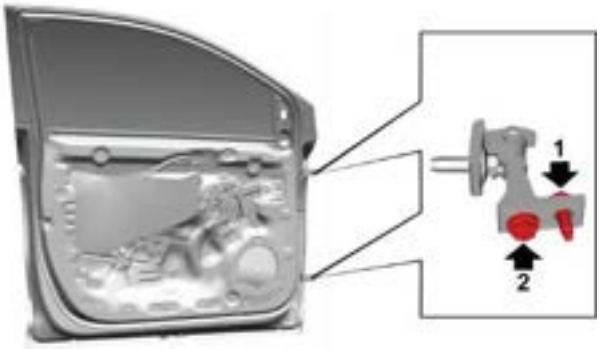

SC115209

5. Remove the front door hinge assembly - passenger side.
   a. Remove the glove box assembly.

☞ **Glove Box Assembly Remove**

   b. Remove the A pillar lower trim panel.

☞ **A Pillar Lower Trim Panel Remove**

   c. Remove 7 screws fixing the glove box frame to the instrument panel frame, loosen the clips and remove the glove box frame.

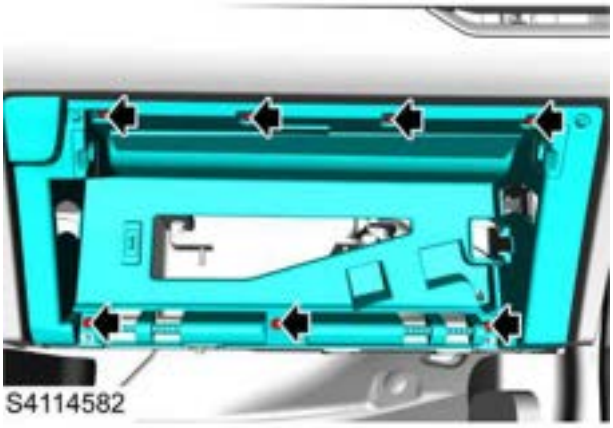

S4114582

   d. Loosen the clip, tear off the screw hole gasket to expose the tool hole.
   e. Remove 2 bolts (1) fixing the lower hinge to the body side from the outside of the body and discard them.
   f. Remove and discard 2 bolts (2) fixing the lower hinge to the body side from the inside of the body, and remove the driver door lower hinge.

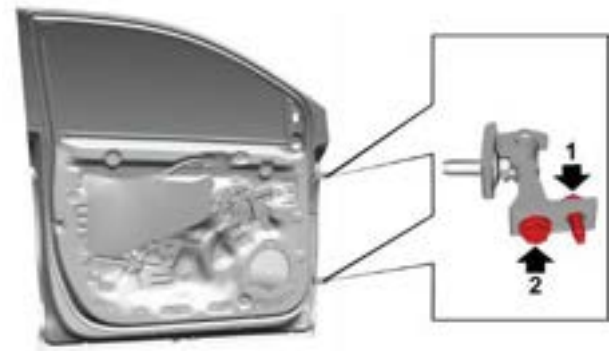

SC115209

Refit

1. Fit the front door hinge assembly - driver side.
   a. Fit 2 bolts fixing the lower hinge of the front door to the body from the inside of the body, tighten them to **30-36Nm** , and check the torque.
   b. Fit 2 bolts fixing the lower hinge of the front door to the body from the outside of the body, tighten them to **30-36Nm** , and check the torque.
   c. Restore the screw hole gasket and fit the clip.
   d. Fit 2 bolts fixing the upper hinge to the door side from the outside of the body, tighten them to **40-50Nm** , and check the torque.
   e. Fit the front door assembly.

Front Door Assembly Refit

   f. Remove the jack, and check if the door can work properly.
   g. Fit the body control module.

Body Control Module Refit

   h. Fit and tighten 1 nut fixing the driver compartment fuse box to the beam.
   i. Fit the driver side lower closure panel assembly.

Driver side lower closure panel assembly Refit

   j. Fit the A pillar lower trim panel.

A Pillar Lower Trim Panel Refit

2. Fit the front door hinge assembly - passenger side.
   a. Fit 2 bolts fixing the lower hinge of the front door to the body from the inside of the body, tighten them to **30-36Nm** , and check the torque.
   b. Fit 2 bolts fixing the lower hinge of the front door to the body from the outside of the body, tighten them to **30-36Nm** , and check the torque.
   c. Restore the screw hole gasket and fit the clip.
   d. Fit 2 bolts fixing the upper hinge to the door side from the outside of the body, tighten them to **40-50Nm** , and check the torque.
   e. Fit the front door assembly.

Front Door Assembly Refit

   f. Remove the jack, and check if the door can work properly.
   g. Press the clip, fit 7 bolts fixing the glove box frame to the instrument panel body, tighten them to **1.4-1.8Nm** , and check the torque.
   h. Fit the glove box assembly.

Glove Box Assembly Refit

   i. Fit the A pillar lower trim panel.

A Pillar Lower Trim Panel Refit

3. Close the front door.

Remove

1. Open the front door, and ensure that the front door window glass is fully lifted.
2. Remove the front door outer handle and lock cylinder trim cover.

☞**Front Door Outer Handle and Lock Cylinder Trim Cover Remove**

3. Remove 1 screw fixing the driver door outer handle bracket to the door.

4. Release the harness clip, separate the driver door outer handle link from the driver door outer handle bracket, and remove the outer handle bracket assembly from the door cavity.

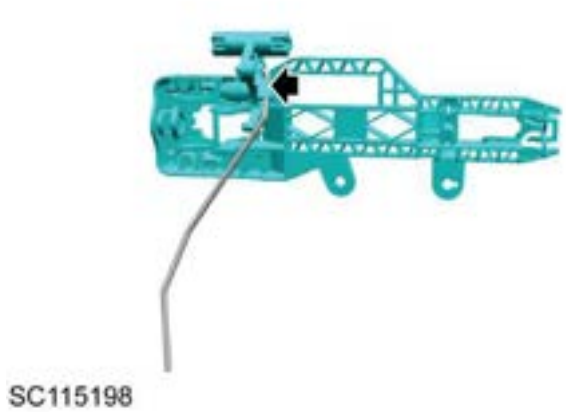

Refit

1. Fit the driver door outer handle bracket assembly from the driver door cavity, and locate it to the corresponding mounting position on the door outer panel.
2. Fit the driver door outer handle link to the driver door outer handle bracket. Fix the harness to the driver side door outer handle bracket, and fit the clip.
3. Fit 1 screw fixing the outer handle bracket to the door from the outside of the door, tighten it to **2-2.5Nm** , and check the torque.
4. Fit the front door outer handle and lock cylinder trim cover.

☞**Front Door Outer Handle and Lock Cylinder Trim Cover Refit**

5. Try to open the door through the exterior handle and lock cylinder, and ensure all parts are correctly fitted.

Remove

1. Raise the window glass to the highest position.
2. Remove the front door waterproof membrane.

☞Front Door Waterproof Membrane Remove

3. Remove 3 screws fixing the woofer to the front door, disconnect the harness connector, and remove the front door woofer.

4. Remove 1 bolt fixing the front door check to the body.

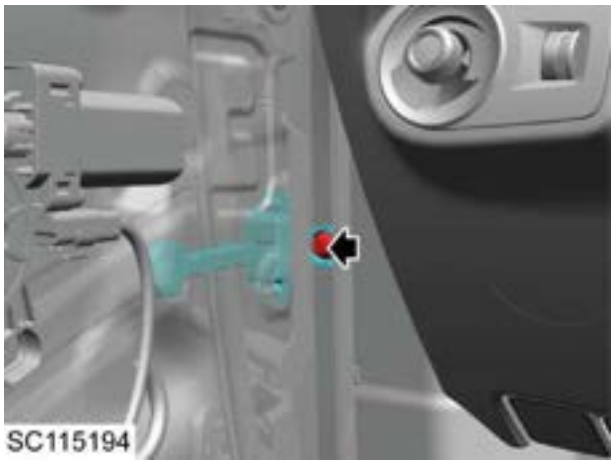

5. Remove 2 bolts fixing the front door check to the door.

6. Remove the front door check from the door cavity.

Refit

1. Fit 2 bolts fixing the check to the body, tighten them to **7-10Nm** , and check the torque.
2. Fit 1 bolt fixing the check to the body, tighten it to **19-25Nm** , and check the torque.
3. Fix the front door woofer to the front door, fit 4 screws, tighten them to **1-2NM** , and check the torque.
4. Fit the front door waterproof membrane.

☞Front Door Waterproof Membrane Refit

Driver Side Door Outer Handle Assembly

Remove

1. Open the driver door and raise the window to the highest position.
2. Remove the front door interior trim panel.

☞ **Front Door Interior Trim Panel Remove**

3. Remove the front door waterproof membrane.

☞ **Front Door Waterproof Membrane Remove**

4. Release the clip connecting the lock cylinder link to the lock cylinder of the front left door from the door cavity to separate the lock cylinder link from the lock cylinder.

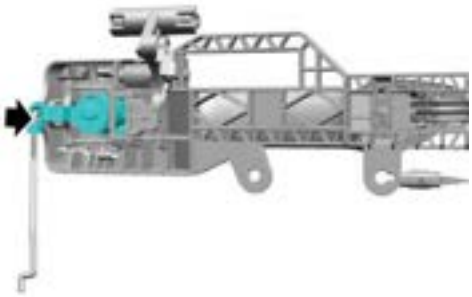

SC115199

5. Remove the slide valve plug at the end of the front door to access to the slide valve fixing the door lock cylinder to the door outer handle bracket.
6. Use the right tool to open the slide valve.

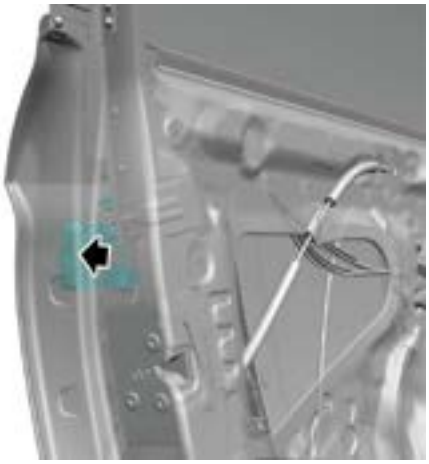

SC115215

7. Pull the rear end of the front door outer handle, pry off the lock cylinder trim cover and remove the front door lock cylinder.
8. Disconnect the harness connector of the PEPS antenna from the door cavity.
9. Move the outer handle towards the rear of the body, pull the rear of the outer handle outwards to separate it from the outer handle liner, and remove the outer handle assembly.

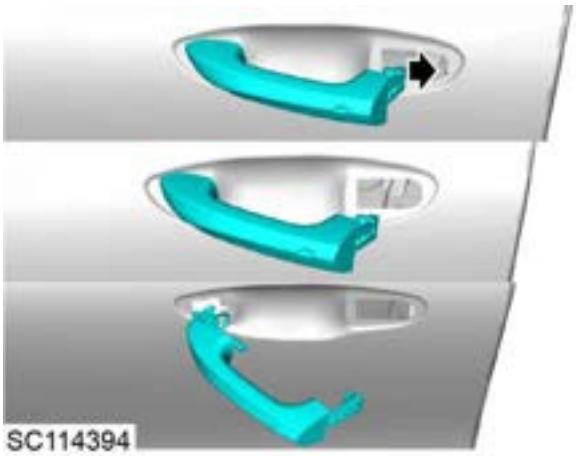

SC114394

Refit

1. Fit the front end of the driver door outer handle into the front mounting hole of the door, and move the outer handle towards the rear vehicle.
2. Clamp the rear end of the outer handle into the slot of the outer handle bracket.
3. Fit the rear shim of the door outer handle.
4. Insert the antenna through the hole on the front handle of the door from the outside of the door, and connect the harness connector.
5. Fit the lock cylinder and lock cylinder trim cover.
6. Use a suitable tool to push the slide valve to the lock cylinder to ensure that it is clamped in place.
7. Press the slide valve plug into the round hole on the door side and secure the plug clip firmly so that seal can be achieved.
8. Fit the clip connecting the lock cylinder link to the lock cylinder of the front left door from the door cavity.
9. Check if the outer door handle can work properly.
10. Fit the front door waterproof membrane.

☞ **Front Door Waterproof Membrane Refit**

11. Fit the front door interior trim panel.

☞ **Front Door Interior Trim Panel Refit**

12. Close the door and check if the outer door handle can work properly.

Rear Door Outer Handle

Remove

1. Remove the slide valve plug on the side of the rear door to gain access to the slide valve fixing the lock cylinder trim cover to the door outer handle bracket.
2. Use the right tool to open the slide valve.

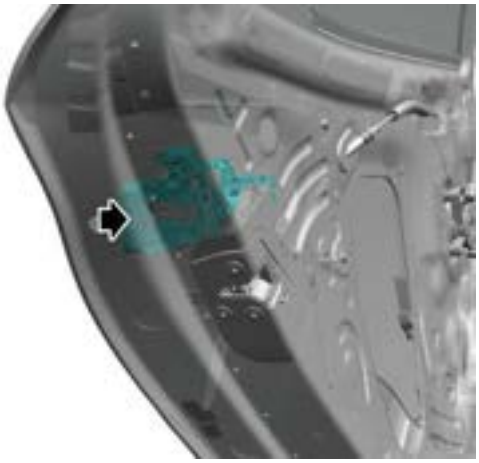

3. Pull up the rear end of the outer handle, and remove the outer handle lock cylinder trim cover.
4. Move the outer handle towards the rear body, pull the rear of the outer handle outwards to disconnect it from the outer handle bracket, then remove it.

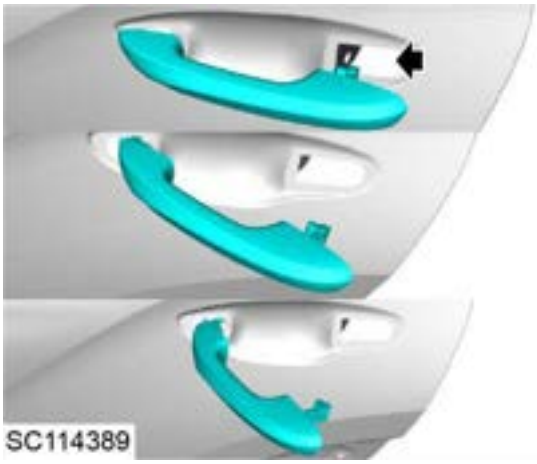

Refit

1. Fit the front end of the rear door outer handle into the front mounting hole of the door, and move the outer handle towards the front vehicle.
2. Fit the rear shim of the outer handle.
3. Fit the rear door lock cylinder trim cover.
4. Pull up the rear end of the rear door outer handle completely, fix the rear door lock cylinder trim cover to the door outer handle bracket, and push in the slide valve to ensure that it is clamped in place.
5. Press the slide valve plug into the round hole on the door side and secure the plug clip firmly so that seal can be achieved.
6. Check if the outer door handle can work properly.

Driver Side Door Lock Body Assembly

Remove

1. Open the front door, and ensure that the front door window glass is fully lifted.
2. Remove the front door interior trim panel.

☞ **Front Door Interior Trim Panel Remove**

3. Remove the front door waterproof membrane.

☞ **Front Door Waterproof Membrane Remove**

4. Loosen the clip (1) between the front door lock cylinder link and the front door outer handle bracket, and separate the lock cylinder link (2) from the front door outer handle bracket.
5. Loosen the clip (4) between the front door outer handle link and the lock, separate the front door outer handle link (3) from the lock, and remove the front door lock assembly.

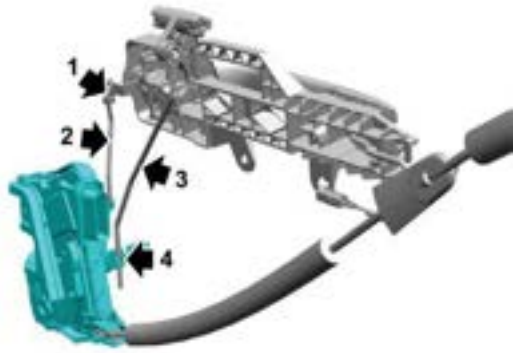

SC115205

6. Disconnect the harness connector on the front door lock, and remove 3 bolts fixing the front door lock to the door.

SC115189

7. Separate the interior handle cable from the lock assembly and remove the driver side door lock.

SC115206

Refit

1. Connect the front door interior handle cable to the front door lock.
2. Locate the lock assembly on the door from the door cavity, tighten it with bolts to **7-10Nm** from top to bottom, and check the torque.
3. Connect the harness connector of the front door lock.
4. Clip the front door outer handle link into the corresponding clip of the front door lock.
5. Fit the lock cylinder link into the corresponding clip of the front door outer handle bracket.
6. Fit the front door waterproof membrane.

☞ **Front Door Waterproof Membrane Refit**

7. Fit the front door interior trim panel.

☞ **Front Door Interior Trim Panel Refit**

8. Check if the outer/inner handle of the front door can work properly.
9. Close the front door.

Rear Door Adjustment

Rear Door Hinge Adjustment

1. Open the rear door.
2. Put the wood block on the jack, and put the jack under the door to support the rear door.
3. Unscrew 2 bolts fixing the upper and lower hinges of the rear door to the rear door side.

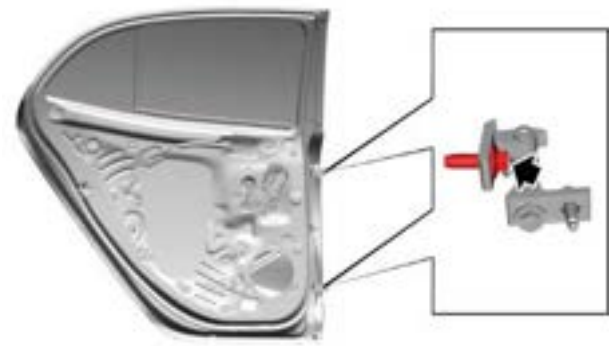

SC115211

4. Use the jack to support and adjust the rear door.
5. Pre-tighten the bolts fixing the hinge to the door side.
6. Remove the jack, and close the door to check the adjustment.
7. When the desired adjustment is achieved, tighten the bolt securing the hinge on the door to **40-50Nm** , and check the torque.

Rear Door Striker Adjustment

The rear door striker is a latch with two screws. In most cases, it is necessary to adjust the striker upward/downward or inward/outward:

- Frame damage resulting from a collision
- Fit a new door weatherstrip
- Customer's repair request for excessive wind noise
- Difficulty in opening or closing the door

Adjust the striker upward/downward or inward/outward according to the following procedures:

1. Position the door correctly.
2. Open the rear door.
3. Loosen 2 striker bolts. Adjust the striker to align the door pin, then pre-tighten the bolts.

SC115168

4. Close the door, and check if the front and rear of the door are flush with the sheet metal of the body side panel and if the door can be opened and closed normally.
5. After the adjustment, open the door, tighten the bolts fixing the strikers to the body to **19-25Nm** , and check the torque.
6. Close the door.

Rear Door Hinge Assembly

Remove

1. Open the rear door.
2. Remove the rear door assembly.

☞Rear Door Assembly Remove

3. Remove and discard 2 bolts fixing the rear door upper hinge to the rear door.

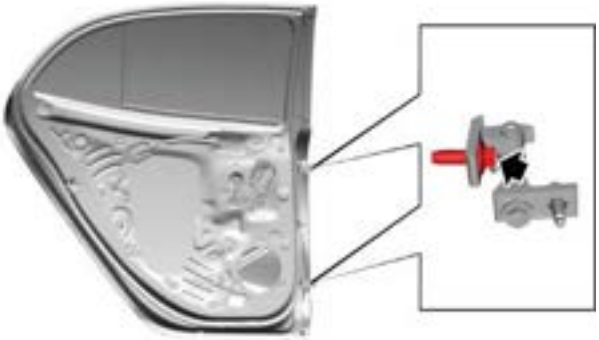

SC115211

4. Remove the B pillar lower trim panel.

☞B Pillar Lower Trim Panel Remove

5. Remove and discard 2 bolts (1) fixing the rear door lower hinge to the body side from the outside of the B pillar.
6. Remove and discard 2 bolts (2) fixing the rear door lower hinge to the body side from the inside of the B pillar.

SC115210

7. Remove the upper and lower hinges of the rear door.

Refit

1. Locate the lower hinge of the rear door to the B pillar.
2. Fit 2 new bolts locating the lower hinge to the body side from the inner side of the B pillar, tighten them to **30-36Nm** , and check the torque.
3. Fit 2 new bolts locating the lower hinge to the body side from the outer side of the B pillar, tighten them to **30-36Nm** , and check the torque.
4. Fit the B pillar lower trim panel.

☞B Pillar Lower Trim Panel Refit

5. With the help of an assistant, fit 2 new bolts locating the upper hinge of the rear door to the door side, tighten them to **40-50Nm** , and check the torque.
6. Fit the rear door assembly.

☞Rear Door Assembly Refit

7. Close the rear door.

Rear Door Assembly

Remove

1. Disconnect the negative battery cable.
2. Open the rear door.
3. Put the wood block on the jack, and put the jack under the door to support the rear door.
4. Remove 1 bolt fixing the door check to the body side.

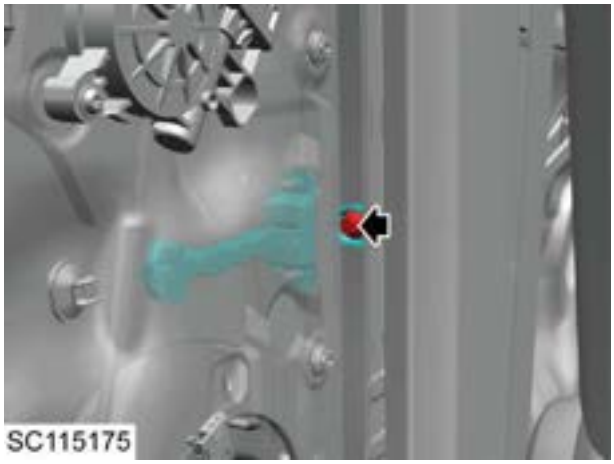

5. Pry off the anti-rotation bolt cover, and remove the anti-rotation bolt fixing the two hinge flaps between the upper and the lower hinges.

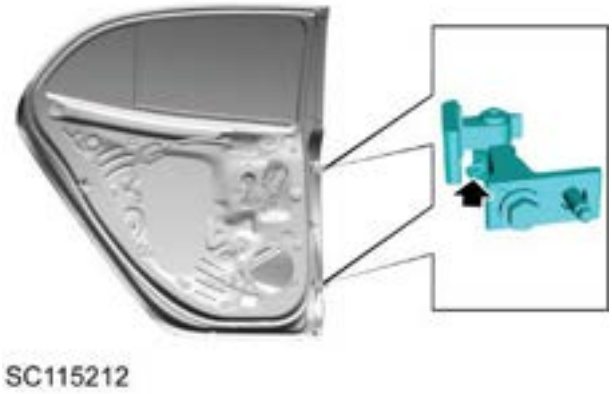

Caution：Protect the paint from scratch when removing or fitting the door assembly.

6. With the help of an assistant, pry off the rubber seal ring on the body side, and pull out the connector to disconnect the harness connector.

7. Lift the rear door up, separate the flaps of the upper and the lower hinges, and remove the rear door assembly.

Refit

1. With the help of an assistant, locate the door to the body.
2. Connect the harness connector, and insert the rubber seal ring into the mounting hole in the body.
3. Fit the anti-rotation bolts fixing the upper and lower hinges of the rear door to the door side, tighten them to **20-26Nm** , check the torque, and fit the anti-rotation bolt trim covers.
4. Fit 1 new bolt fixing the door check to the body side, tighten it to **19-25Nm** , and check the torque.
5. Adjust the opening and closing performance of the door.

☞ Rear Door Hinge Adjustment

6. Connect the negative battery cable.

Rear Door Lock Body Assembly

Remove

1. Open the rear door and ensure that rear door windows rise to the highest position.
2. Remove the rear door interior trim panel.

Rear Door Interior Trim Panel Remove

3. Remove the rear door waterproof membrane.

Rear Door Waterproof Membrane Remove

4. Remove the clip between the rear door outer handle link and the lock.

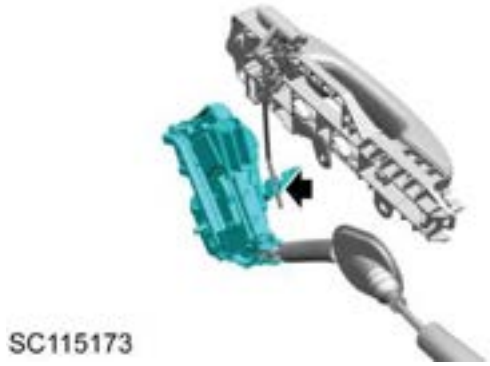

SC115173

5. Disconnect the harness connector on the rear door lock, and remove 3 bolts fixing the rear door lock to the door.

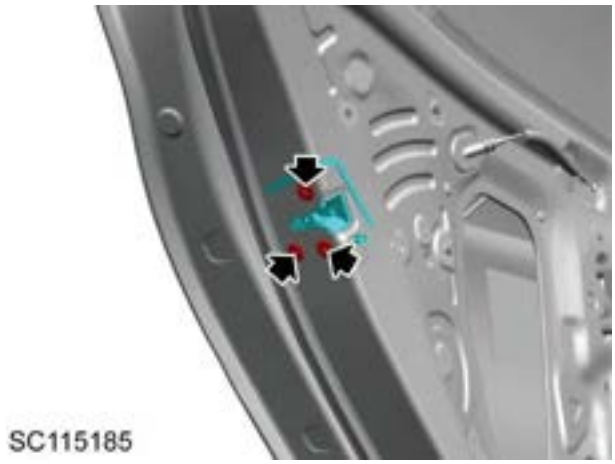

SC115185

6. Carefully separate the interior handle cable of the rear door from the lock, and completely remove the rear door lock.

SC115177

Refit

1. Fit the inner handle cable of the rear door to the lock.
2. Locate the lock to the mounting position from the door cavity, fit 3 bolts, tighten them to **7-10Nm** , and check the torque.
3. Connect the harness connector of the lock.
4. Connect the rear door outer handle release link to the lock, and secure it with clips.
5. Fit the rear door waterproof membrane.

Rear Door Waterproof Membrane Refit

6. Fit the rear door interior trim panel.

Rear Door Interior Trim Panel Refit

7. Check if the outer and inner handles of the rear door can work properly.

Remove

1. Open the rear door, and ensure that the rear door window glass is fully lifted.
2. Remove the rear door outer handle and lock cylinder trim cover.

☞**Rear Door Outer Handle and Lock Cylinder Trim Cover Remove**

3. Remove the rear door interior trim panel.

☞**Rear Door Interior Trim Panel Remove**

4. Remove the rear door waterproof membrane.

☞**Rear Door Waterproof Membrane Remove**

5. Remove 1 screw fixing the rear door outer handle bracket to the door.

6. Separate the outer handle link from the rear door outer handle bracket, and remove the rear door outer handle bracket assembly form the door cavity.

Refit

1. Fit the rear door outer handle bracket assembly from the rear door cavity, and locate it to the corresponding mounting position on the door outer panel.
2. Fit the rear door outer handle link to the rear door outer handle bracket.
3. Fit 1 screw fixing the outer handle bracket to the door from the outside of the door, tighten it to **2-2.5Nm** , and check the torque.
4. Fit the rear door waterproof membrane.

☞**Rear Door Waterproof Membrane Refit**

5. Fit the rear door interior trim panel.

☞**Rear Door Interior Trim Panel Refit**

6. Fit the rear door outer handle and lock cylinder trim cover.

☞**Rear Door Outer Handle and Lock Cylinder Trim Cover Refit**

7. Try to open the door through the outer handle, and ensure all parts are correctly fitted.

Remove

1. Raise the window glass to the highest position.
2. Remove the rear door waterproof membrane.

Rear Door Waterproof Membrane Remove

3. Remove 3 screws fixing the woofer to the rear door, disconnect the harness connector, and remove the rear door woofer.

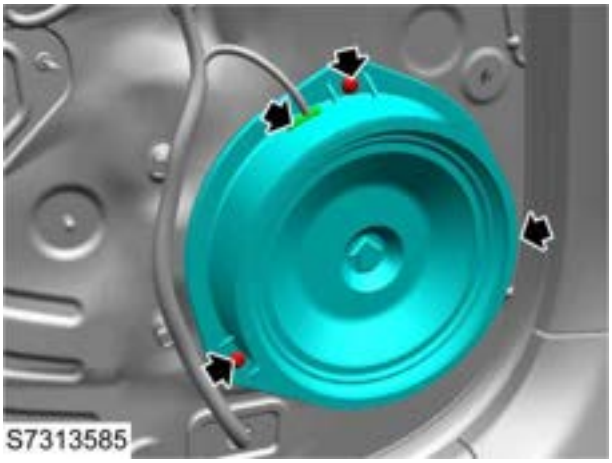

4. Remove 1 bolt fixing the rear door check to the body.

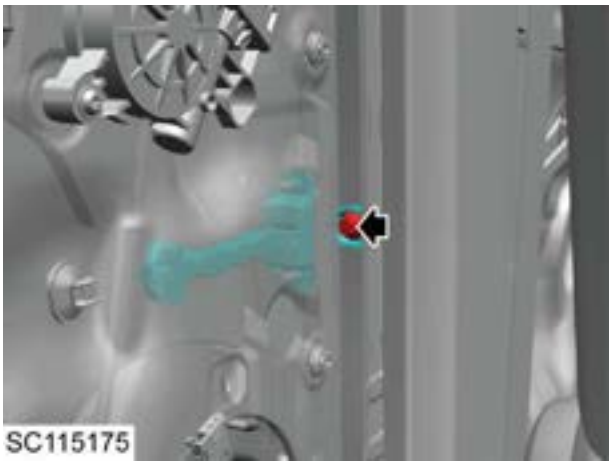

5. Remove 2 bolts fixing the rear door check to the door.

6. Remove the rear door check from the door cavity.

Refit

1. Fit 2 bolts fixing the check to the body, tighten them to **7-10Nm** , and check the torque.
2. Fit 1 bolt fixing the check to the body, tighten it to **19-25Nm** , and check the torque.
3. Fix the rear door woofer to the rear door, fit 4 screws, tighten them to **1-2NM** , and check the torque.
4. Fit the rear door waterproof membrane.

Rear Door Waterproof Membrane Refit

Door Functional Parts

Specification

Torque

Description	Value
Nut-winder regulator guide rail to door	7-10Nm
Bolt-winder regulator motor to door	3-4Nm
Bolt-door checker to body	19-25Nm
Bolt-rear door sill outer sealing strip to door	7-10Nm
Nut-rear winder regulator guide rail to door	7-10Nm
Bolt-rear winder regulator motor to door	3-4Nm
Screw-Door Switch Package to Door Panel	1.5-2.5NM

Description and Operation-Door Window Regulator

System Layout

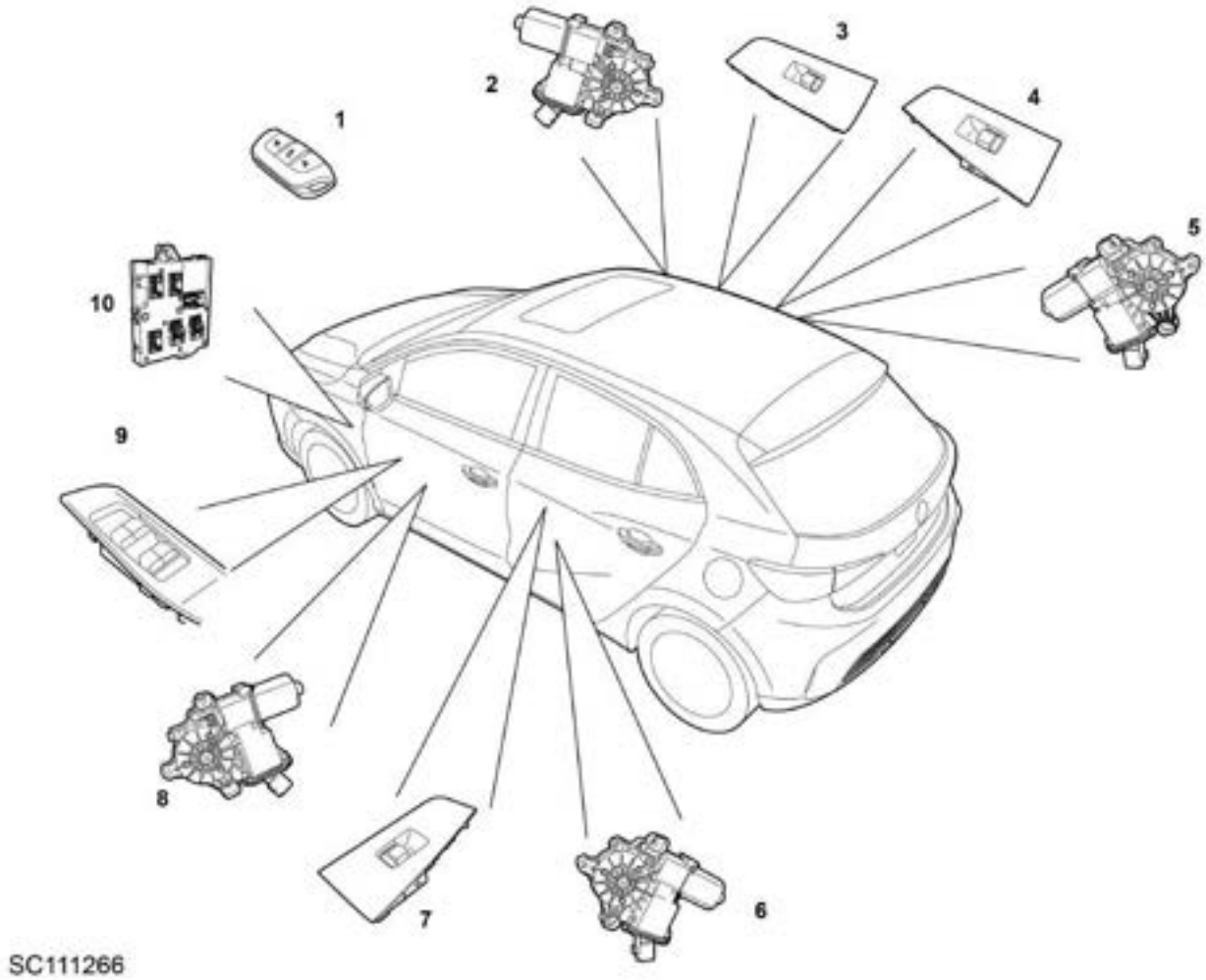

1. smart key
2. Front passenger side window regulator motor
3. Front passenger side window switch
4. Rear right window switch
5. Rear right window regulator motor
6. Rear left window regulator motor
7. Rear left window switch
8. Driver's side window regulator motor
9. Driver's side window switch
10. Body Control Module (BCM)

System Control Diagram

Window Regulator System Control Diagram - Anti-pinch Function Only for Driver Door Window

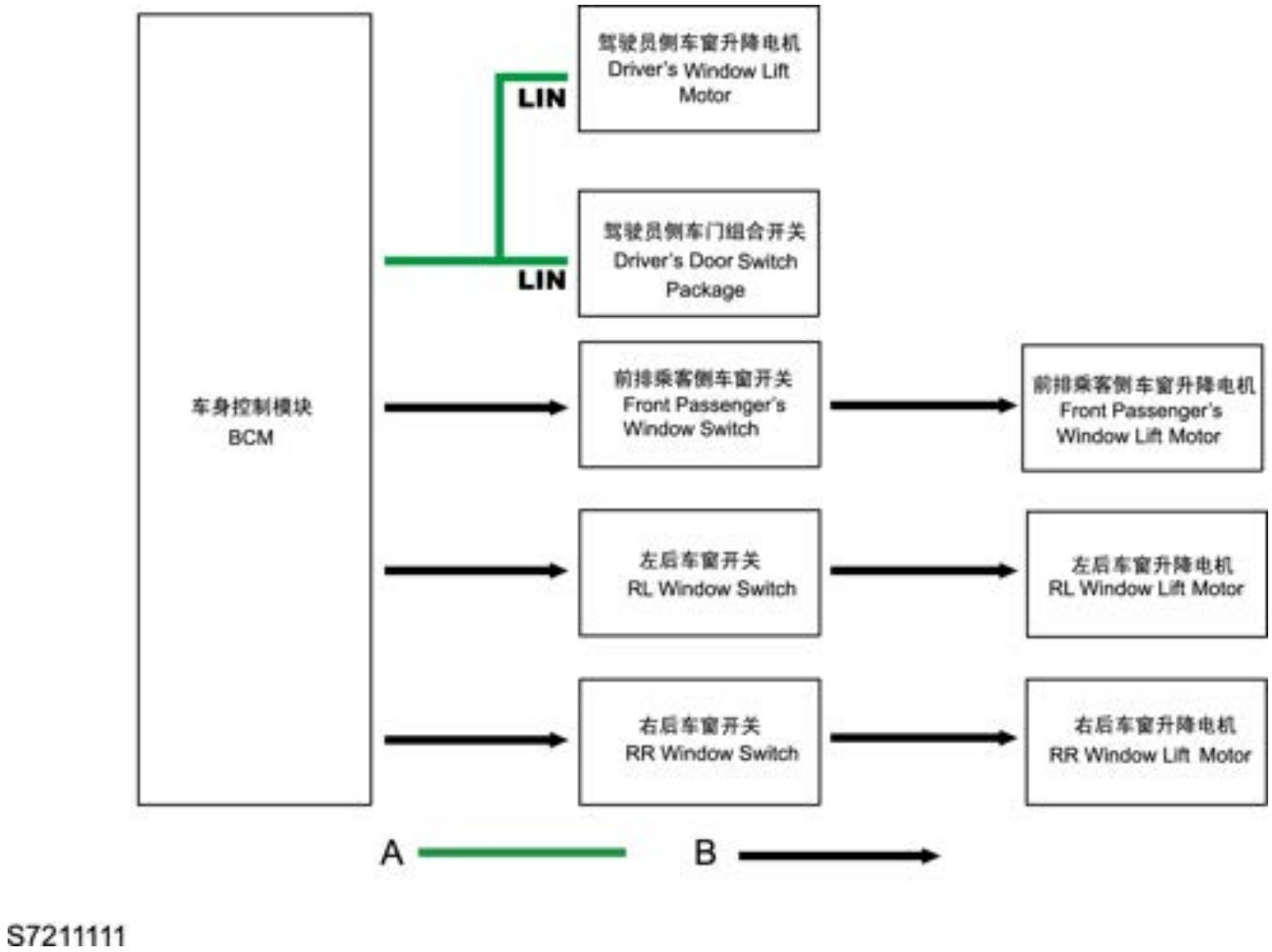

A = LIN Bus; B = Hard Wire

Description

Overview

All vehicle models are equipped with the front and rear power window systems. The power window system includes:

- Front and rear window glass on left and right sides
- Driver door switch package (DDSP)
- Separate switch on the front/rear passenger door
- Window regulator motor and regulator mechanism
- Body control module (BCM)

Each door interior trim panel is equipped with the lift/press type switches which control the power window of the corresponding door. DDSP is equipped with 4 power window switches and 1 rear window disable switch for the driver to control the operation of all windows. When the Start switch is in ACC or ON/START position, or no door is opened within 30 seconds after the vehicle is powered off, it is allowed to operate the power window.

The power window system with one-touch down function is fitted on the doors of all models as standard configuration. The anti-pinch and one-touch up functions can only be realized on the front/rear doors of some models.

Front Power Window

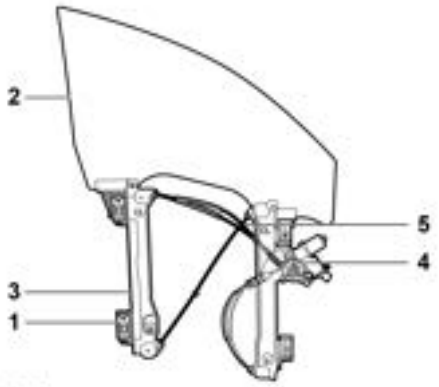

SC114918

1. Slide Block
2. Front Door Window Glass
3. Guide Rail
4. Motor Assembly
5. Cable

The front power window can be operated by the separate switch on the door or DDSP. The common front window motor is controlled by the BCM located on the side of the driver side lower trim panel and the driver window motor with anti-pinch and one-button up functions is jointly controlled by the BCM and the anti-pinch module at the motor. BCM controls the upward or downward movement of the window glass by reversing the supply polarity of the window motor.

The front window regulator and motor assembly consists of 2 guide rails, 3 cables, 1 motor, 1 speed change mechanism (winding drum) and 2 slide blocks. The guide rail is fixed on the door interior panel with 4 nuts and the window motor is fixed on the door interior panel with 3 bolts. The window glass is connected to the slide block on the rail through clips. The slide block is clamped on the flanging of the rail to move up and down along the rail for clearance fit.

The ascending/descending of the window glass is controlled by 3 cables. One end of the upper cable is connected to the slide block. The cable moves upward along the rail to wind around the pulley on the top of the rail and then downward along the diagonal to arrive at the winding drum connected with the motor. One end of the lower cable is connected to the slide block bottom. The cable moves downward along the rail to wind around the pulley at the bottom of the rail and then moves along the diagonal to arrive at the winding drum connected with the motor.

When the motor is operating, the slide block slides on the rail along the direction as required under the lead of the cable to drive the window glass to move up and down.

Rear Power Window

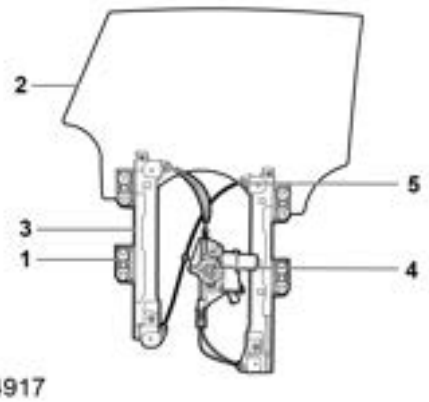

SC114917

1. Slide Block
2. Rear Door Window Glass
3. Guide Rail
4. Motor Assembly
5. Cable

The rear power window can be controlled by the separate switch on each rear door or DDSP. The common front window motor is controlled by the BCM located on the side of the driver side lower trim panel and the driver window motor with anti-pinch and one-button up functions is jointly controlled by the BCM and the anti-pinch module at the motor. BCM controls the upward or downward movement of the window glass by reversing the supply polarity of the window motor.

The rear window regulator and motor assembly consists of 2 guide rails, 3 cables, 1 motor, 1 speed change mechanism (winding drum) and 2 slide blocks. The guide rail is fixed on

the door interior panel with 4 nuts and the window motor is fixed on the door interior panel with 3 bolts. The window glass is connected to the slide block on the rail by bolts. The slide block is clamped on the flanging of the rail to move up and down along the rail for clearance fit.

The ascending/descending of the window glass is controlled by 3 cables. One end of the upper cable is connected to the slide block. The cable moves upward along the rail to wind around the pulley on the top of the rail and then downward along the diagonal to arrive at the winding drum connected with the motor. One end of the lower cable is connected to the slide block bottom. The cable moves downward along the rail to wind around the pulley at the bottom of the rail and then moves along the diagonal to arrive at the winding drum connected with the motor.

When the motor is operating, the slide block slides on the rail along the direction as required under the lead of the cable to drive the window glass to move up and down.

Driver Door Switch Package

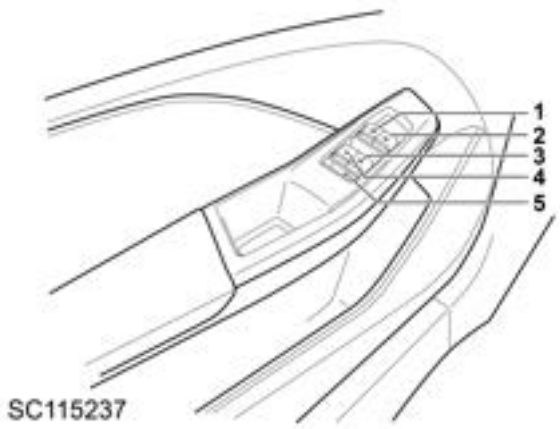

1. Driver Side Door Power Window Switch
2. Front Passenger Side Door Power Window Switch
3. Rear Left Door Power Window Switch
4. Rear Right Door Power Window Switch
5. Rear Window Disable Switch

Operation

Power Window

Control of the window regulator can be achieved by the following operations:

- Operate the switch on the DDSP to control the up/down of each power window glass and disable the rear power window.
- Operate the front/rear passenger side switch to control the up/down of the corresponding power window glass.

Window Regulator Switch

DDSP sends control command to the window motor through the BCM, including such request signals as open, close, one-touch open/close, etc. The DDSP is fitted with the rear window disable switch, when the disable switch is activated, the rear passenger window switch will be disabled.

Independent Passenger Window Switch

The independent passenger window switch controls the up/down of the corresponding passenger window glass. When the rear window disable function is active, the rear window switch cannot raise/lower the window on the corresponding side.

Window Regulator Control Mode

Manual Mode

Press/lift the window switch to perform manual mode. The window will continue ascending/descending until the switch is released.

One-touch Control

Only the driver window switch is provided with one-touch control function.

- One-touch Open (One-touch Down): press the window control switch to the 2nd position, and the window will automatically open. Operate the window control switch again during the descending, and the window will stop descending.
- One-touch Close (One-touch Up): lift the window control switch to the 2nd position, and the window will automatically close. Operate the window control switch again during the ascending, and the window will stop ascending.

Anti-pinch Function

For the switch with One-touch Up function, when the function is applied, if there is any object in the ascending path of window glass, the window glass will stop at the obstacle and descend automatically so that the obstacle can be removed.

Thermal Protection and Self-learning

Thermal Protection

The window regulator motors without "One-touch Up" and "Anti-pinch" functions realize thermal protection through the opening and closing of the temperature-sensitive patch. When consecutive and repeated operation of the window regulator switch within a short time causes a hot motor, the temperature-sensitive patch will disconnect, cutting off the power of the regulator motor and realizing thermal protection for the regulator motor. At this time, the power window switch will be disabled temporarily. Please wait for a short time. After the motor is slightly cooled, the operation of the window regulator function can be resumed.

The window regulator motors with "One-touch up" and "Anti-pinch" functions has a motor control module which realizes the ascending/descending, anti-pinch and thermal protection functions of the window. Consecutive and repeated operations of the power window with the "One-touch Up" and "Anti-pinch" functions within a short time can cause the BCM to determine that the window regulator motor is too hot and that the thermal protection is required. In this case, the power window switch will be disabled, and the regulator motor will stop, please wait for a short time, after the motor is slightly cooled, it will resume the function of the window regulator.

Self-learning

For window regulators with "One-touch Up" and "Anti-pinch" functions, if the power is off during the operation of regulators, these functions will be disabled; when the power is on, these functions can be resumed by the initialization of regulators.

The window will resume the "One-touch Up" and "Anti-pinch" functions by fully opening the window, continually lifting the switch to fully close the window, and lifting and holding the switch for about 5s.

After the completion of above procedures, the self-learning of the window is finished.

Detailed Information List of Component Pins

End View and Pin Information of Driver Window One-touch Automatic Up/Down Switch Harness Connector DD006 (with Anti-pinch Function)

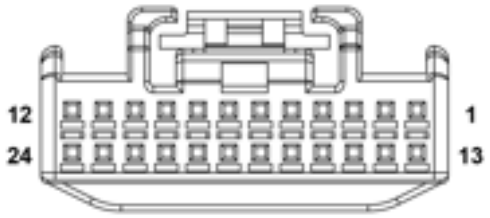

Pin No.	Description
1	Driver Side Exterior Rearview Mirror Left/Right/Up/Down Adjustment -
2	Driver Side Exterior Rearview Mirror Up/Down Adjustment +
3	Front Passenger Side Exterior Rearview Mirror Left/Right Adjustment +
4	Front Passenger Side Exterior Rearview Mirror Left/Right/Up/Down Adjustment -
5	Front Passenger Side Exterior Rearview Mirror Up/Down Adjustment +
6	Driver Side Exterior Rearview Mirror Memory Up/Down Adjustment Signal
7	Driver Side Exterior Rearview Mirror Memory Left/Right Adjustment Signal
8	Front Passenger Side Exterior Rearview Mirror Memory Up/Down Adjustment Signal
9	Front Passenger Side Exterior Rearview Mirror Memory Left/Right Adjustment Signal
10	Exterior Rearview Mirror Memory Sensor Ground
11	-
12	Exterior Rearview Mirror Memory Sensor Power Supply
13	Driver Side Exterior Rearview Mirror Left/Right Adjustment +
14	-
15	-
16	-
17	-
18	Exterior Rearview Mirror Unfold Signal
19	Exterior Rearview Mirror Fold Signal
20	-
21	LIN
22	GND
23	-
24	Power Supply

End View and Pin Information of Front Passenger Window Switch Harness Connector PD005

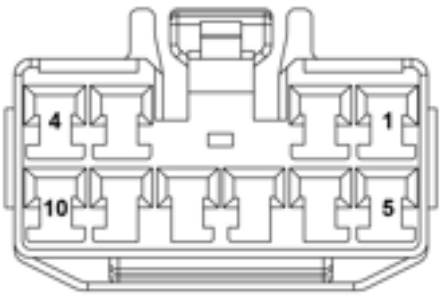

Pin No.	Description
1	Front Passenger Window Up Motor
2	Front Passenger Window Up Relay
3	Backlight Brightness
4	Power Supply

Pin No.	Description
5	Front Passenger Window Down Motor
6	Front Passenger Window Switch Up Signal
7	Front Passenger Window Down Relay
8	Front Passenger Window Automatic Switch Signal
9	Front Passenger Window Switch Down Signal
10	Ground

End View and Pin Information of Rear Left Window Switch Harness Connector RL002

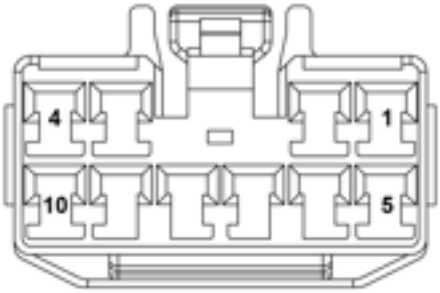

Pin No.	Description
1	Rear Left Window Up Motor
2	Rear Left Window Switch Up Relay
3	Backlight Brightness
4	Power Supply
5	Rear Left Window Down Motor
6	Rear Left Window Switch Up Signal
7	Rear Left Window Switch Down Relay
8	Rear Left Window Automatic Switch Signal
9	Rear Left Window Switch Down Signal
10	Ground

End View and Pin Information of Rear Right Window Switch Harness Connector RR002

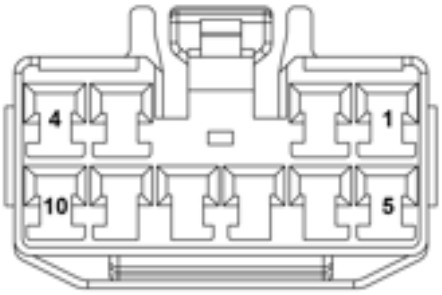

Pin No.	Description
1	Rear Right Window Up Motor
2	Rear Right Window Switch Up Relay
3	Backlight Brightness
4	Power Supply
5	Rear Right Window Down Motor
6	Rear Right Window Switch Up Signal
7	Rear Left Window Switch Down Relay
8	Rear Right Window Automatic Switch Signal
9	Rear Right Window Switch Down Signal
10	Ground

Service Guide

Front Door Window

Remove

1. Remove the front door interior trim panel.

Front Door Interior Trim Panel Remove

2. Remove the front door waterproof membrane.

Front Door Waterproof Membrane Remove

3. Raise the glass to a certain height, to align two clip barbs of the glass with the mounting holes in the door.
4. Remove the front door window outer weatherstrip.

Front Door Window Outer Weatherstrip Remove

5. Remove the front door window inner weatherstrip.

Front Door Window Inner Weatherstrip Remove

6. Push 2 clip barbs fixing the glass to the window regulator outwards from the hole in the glass regulator bracket, and lift the glass to remove it from the window frame.

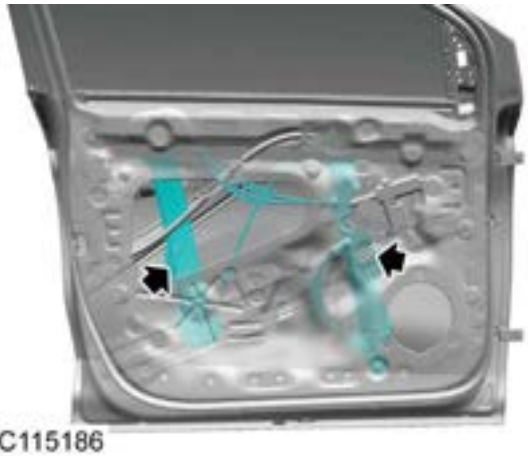

Refit

1. Carefully fit the glass between the inner and outer panels from the window frame, and fit glass run channel weatherstrips on both sides.
2. Lower the glass slowly until it reaches the slider of the glass regulator, align the glass with the clip, put the glass into the slider clip and fit it in place.
3. Fit the inner weatherstrip of front door windowsill.

Front Door Window Inner Weatherstrip Refit

4. Fit the front door window outer weatherstrip.

Front Door Window Outer Weatherstrip Refit

5. Fit the front door waterproof membrane.

Front Door Waterproof Membrane Refit

6. Fit the front door interior trim panel.

Front Door Interior Trim Panel Refit

Remove

1. Disconnect the negative battery cable.
2. Remove the front door window glass.

☞Front Door Window Glass Remove

3. Remove 3 bolts fixing the window regulator motor to the door panel, and disconnect the motor harness connector.

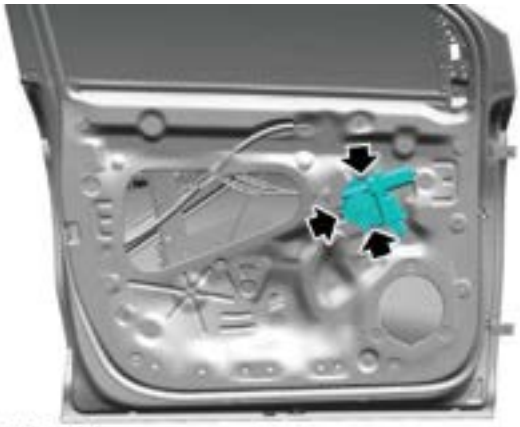

SC115187

4. Loosen the gear engagement, and remove the window regulator motor.
5. Remove 4 nuts fixing the window regulator to the door panel, loosen the clips, and take the window regulator out of the door cavity.

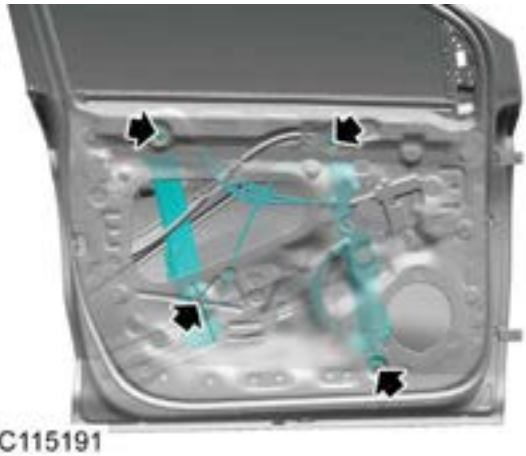

SC115191

Refit

1. Fit the window regulator into the front door cavity, and press the clips in place.
2. Fit 4 nuts fixing the window regulator to the door panel, tighten them to **7-10Nm** in sequence from top to bottom and from left to right, and check the torque.
3. Locate the window regulator motor to the window regulator, engage the gear, and connect the harness connector of the motor.
4. Fit 3 bolts fixing the window regulator motor to the door panel, tighten them to **3-4Nm** , and check the torque.
5. Fit the front door window glass.

☞Front Door Window Glass Refit

6. Connect the negative battery cable.
7. Check if the window regulator can work properly, and check if the window with "one-touch up" function can operate normally.

Note : In case of power failure, the "one-touch up" function may fail; at this time, press the switch to ascend the window to the top, press and hold it for 5s to complete the self learning for window regulator, then the "one-touch up" function will be recovered.

Front Door Window Regulator Adjustment Adjustment

1. Open the front door, and lower the window to a proper position.
2. Disconnect the negative battery cable.
3. Remove the front door interior trim panel.

☞ **Front Door Interior Trim Panel Remove**

4. Remove the waterproof membrane.
5. Loosen 4 nuts fixing the window regulator.

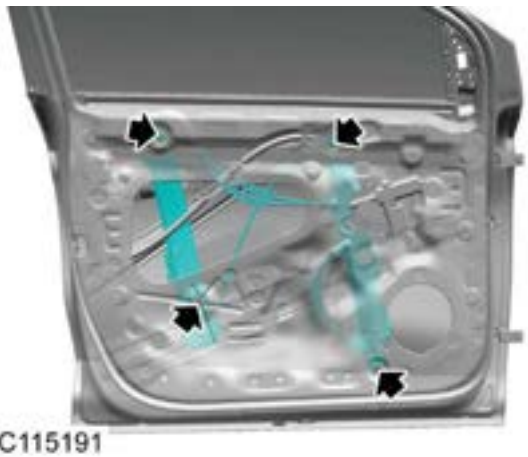

SC115191

6. Adjust the window regulator to fit the window well with the weatherstrips on both ends and ensure the window can work properly.
7. Tighten 4 nuts fixing the window regulator to **6-8Nm** , and check the torque.
8. Connect the negative battery cable, connect the switch harness of regulator motor, and raise or lower the window glass to check its operation and positioning.
9. Stick the waterproof membrane.
10. Fit the front door interior trim panel.

☞ **Front Door Interior Trim Panel Refit**

11. Check if the window regulator can work properly, and check if the window with "one-touch up" function can operate normally.

Note : In case of power failure, the "one-touch up" function may fail; at this time, press the switch to ascend the window to the top, press and hold it for 5s to complete the self learning for window regulator, then the "one-touch up" function will be recovered.

Front Door Window Inner Weatherstrip

Remove

1. Remove the front door interior trim panel.

Front Door Interior Trim Panel Remove

2. Pull up to remove the front door window inner weatherstrip.

SC115192

Refit

1. Align the weatherstrip opening with the door inner sheet metal seam allowance, and fit the front door windowsill inner weatherstrip.
2. Fit the front door interior trim panel.

Front Door Interior Trim Panel Refit

Front Door Window Outer Weatherstrip

Remove

1. Open the front door.
2. Remove the front door window outer weatherstrip.

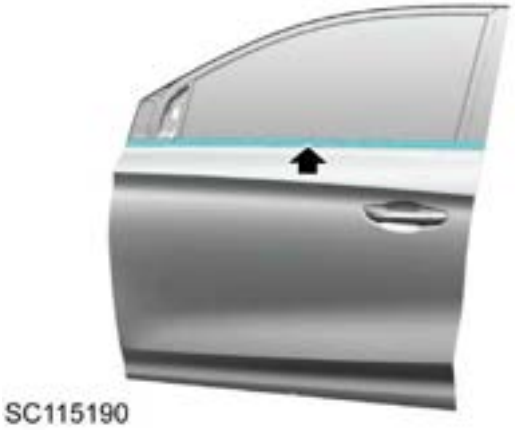

Refit

1. Align the weatherstrip opening with the door inner panel seam allowance, and fit the front door window outer weatherstrip.
2. Close the front door.

Front Door Weatherstrip

Remove

1. Open the front door.
2. Front door weatherstrip - door side:
   a. Remove and discard 1 bolt fixing the door check to the body side.

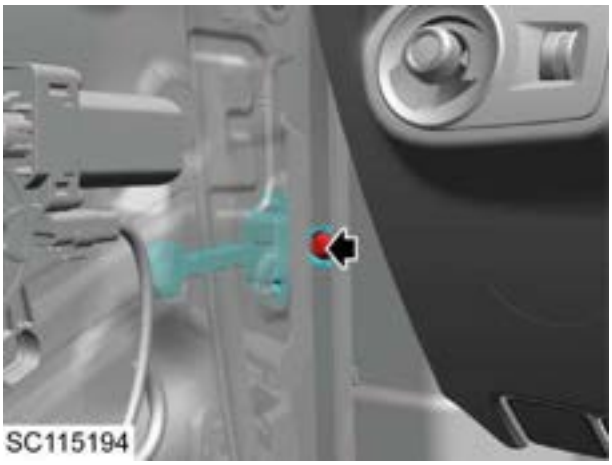

   b. Remove the front door weatherstrip along the front door.

3. Front door weatherstrip - body side:
   a. Open the front door, and remove the front door weatherstrip at body side.

Refit

1. Front door weatherstrip - body side:
   a. Fit the front door weatherstrip at body side to the body along the front door body side panel seam allowance, and fit the front door weatherstrip at body side.
2. Front door weatherstrip - door side:
   a. Fit the front door weatherstrip to the front door along the front door inner panel seam allowance.
   b. Fit 1 bolt fixing the door check to the body side, tighten it to **19-25Nm** , and check the torque.
3. Close the front door.

Front Door Frame B-pillar Decorative Film Remove

1. Remove the front door window upper moulding assembly.

☞Front Door Window Upper Moulding Assembly Remove

2. Remove the front door window outer weatherstrip.

☞Front Door Window Outer Weatherstrip Remove

3. Tear off the front door frame B pillar decorative film and discard it.

Refit

1. Check the surface paint of the door frame, and ensure that the surface is spotless and flat (If there are spots and unevenness, first use non-woven fabric dipped in 50:50 alcohol to scrub the location of the film to ensure the cleanliness of the pasted parts).
2. Peel off the isolation paper on the back of the black film, remove the excess, perforated black film from the upper part along the split line, ensure that the left and right 2 points are aligned with the left and right edges of the panel and then apply the film from top to bottom while using a squeegee to discharge the air, and try to avoid repeatedly lifting and pasting the black film during the process.
3. After the black film has been completely laminated to the panel, use the squeegee to scrape the film back and forth 2-3 times to ensure that the air is fully discharged. Then use the handle to quickly remove the transparent protective film from the surface in one go, so as to avoid stopping in the middle.
4. The excess black film on both sides of the window frame is wrapped by hand, and the rounded corners are trimmed until they are smooth and free from warping.
5. Check that the black film and the window frame fit tightly and the surface is flat without bubbles, creases, dewy white and other defects. If there is a defect, you need to repeat the above operation.

Note：During film sticking placement, the scraper must be used continuously to squeeze out bubbles. If rework is required, it is recommended to carry out it within 24 hours of attachment, and the risk of residual glue will increase after 24 hours. If it is removed after 24 hours, it is recommended to wipe it with alcohol.

6. Fit the front door window outer weatherstrip.

☞Front Door Window Outer Weatherstrip Refit

7. Fit the front door window upper moulding assembly.

☞Front Door Window Upper Moulding Assembly Refit

Front Window Glass Run Channel Weatherstrip

Remove

1. Remove the front door window glass.

☞ **Front Door Window Glass Remove**

2. Remove the front door window frame trim.
3. Remove the front door window glass run channel weatherstrip.

SC115197

Refit

1. Insert the rear part of the window glass run channel weatherstrip into the front door window frame rear trim panel.
2. Align the weatherstrip opening with the door inner panel seam allowance, and fit the front door window glass run channel weatherstrip.
3. Fit the front door window frame trim.
4. Fit the front door window glass.

☞ **Front Door Window Glass Refit**

Front Door Waterproof Membrane

Remove

1. Remove the front door interior trim panel.

Front Door Interior Trim Panel Remove

2. Tear off the waterproof membrane.

SC115202

Refit

1. Fit the waterproof membrane.
2. Fit the front door interior trim panel.

Front Door Interior Trim Panel Refit

Remove

1. Tear off and discard the front door window glass upper decorative film.

Refit

1. Check the surface paint of the door frame, and ensure that the surface is spotless and flat (If there are spots and unevenness, first use non-woven fabric dipped in 50:50 alcohol to scrub the location of the film to ensure the cleanliness of the pasted parts).
2. Peel off the isolation paper on the back of the black film, remove the excess, perforated black film from the upper part along the split line, ensure that the left and right 2 points are aligned with the left and right edges of the panel and then apply the film from top to bottom while using a squeegee to discharge the air, and try to avoid repeatedly lifting and pasting the black film during the process.
3. After the black film has been completely laminated to the panel, use the squeegee to scrape the film back and forth 2-3 times to ensure that the air is fully discharged. Then use the handle to quickly remove the transparent protective film from the surface at once, so as to avoid stopping in the middle.
4. The excess black film on both sides of the window frame is wrapped by hand, and the rounded corners are trimmed until they are smooth and free from warping.
5. Check that the black film and the window frame fit tightly and the surface is flat without bubbles, creases, dewy white and other defects. If there is a defect, you need to repeat the above operation.

Note：During film sticking placement, the scraper must be used continuously to squeeze out bubbles. If rework is required, it is recommended to carry out it within 24 hours of attachment, and the risk of residual glue will increase after 24 hours. If it is removed after 24 hours, it is recommended to wipe it with alcohol.

Remove

1. Remove the rear door window.

Rear Door Window Glass Remove

2. Remove 1 screw (1) fixing the rear quarter window assembly to the door sheet metal.
3. Remove 2 bolts (2) fixing the rear quarter window assembly to the door sheet metal.

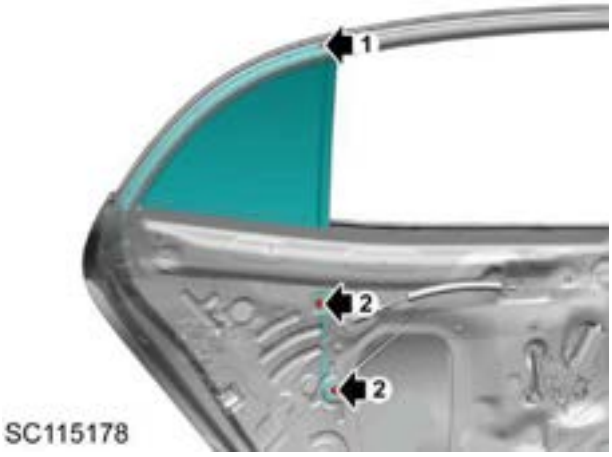

4. Remove the rear quarter window assembly.

Refit

1. Fit 2 bolts fixing the rear quarter window assembly to the door panel, tighten them to **7-10Nm** , and check the torque.
2. Fix the rear quarter window assembly to the door panel, fit and tighten 1 screw.
3. Fit the rear door window.

Rear Door Window Glass Refit

Remove

1. Disconnect the negative battery cable.
2. Remove the rear door window glass.

☞Rear Door Window Glass Remove

3. Remove 3 bolts fixing the window regulator motor to the door panel, and disconnect the motor harness connector.

4. Loosen the gear engagement, and remove the window regulator motor.
5. Remove 2 nuts fixing the window regulator to the door panel, loosen the clips, and take the window regulator out of the door cavity.

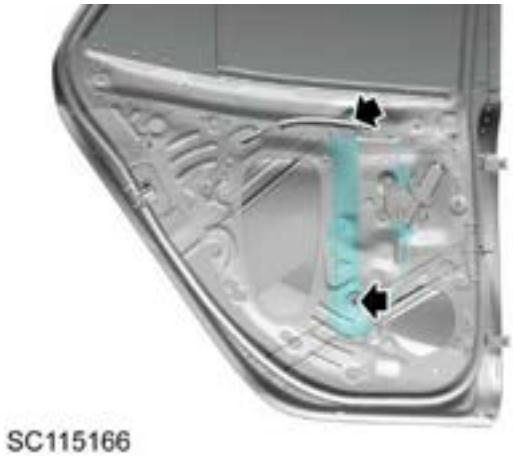

Refit

1. Fit the window regulator into the rear door cavity, and press the clips in place.
2. Fit 4 nuts fixing the window regulator to the door panel, tighten them to **7-10Nm** in sequence from top to bottom and from left to right, and check the torque.
3. Locate the window regulator motor to the window regulator, engage the gear, and connect the harness connector of the motor.
4. Fit 3 bolts fixing the window regulator motor to the door panel, tighten them to **3-4Nm** , and check the torque.
5. Fit the rear door window glass.

☞Rear Door Window Glass Refit

6. Connect the negative battery cable.
7. Check if the window regulator can work properly, and check if the window with "one-touch up" function can operate normally.

Note : In case of power failure, the "one-touch up" function may fail; at this time, press the switch to ascend the window to the top, press and hold it for 5s to complete the self learning for window regulator, then the "one-touch up" function will be recovered.

Rear Door Window Regulator Adjustment Adjustment

1. Open the rear door, and lower the window to a proper position.
2. Disconnect the negative battery cable.
3. Remove the rear door interior trim panel.

☞ **Rear Door Interior Trim Panel Remove**

4. Remove the waterproof membrane.
5. Loosen 2 nuts fixing the window regulator.

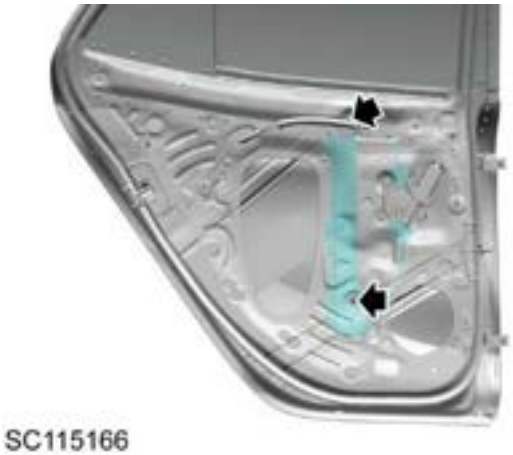

SC115166

6. Adjust the window regulator to fit the window well with the weatherstrips on both ends and ensure the window can work properly.
7. Tighten 2 nuts fixing the window regulator to **6-8Nm** , and check the torque.
8. Connect the negative battery cable, connect the switch harness of regulator motor, and raise or lower the window glass to check its operation and positioning.
9. Stick the waterproof membrane.
10. Fit the rear door interior trim panel.

☞ **Rear Door Interior Trim Panel Refit**

11. Check if the window regulator can work properly, and check if the window with "one-touch up" function can operate normally.

Note : In case of power failure, the "one-touch up" function may fail; at this time, press the switch to ascend the window to the top, press and hold it for 5s to complete the self learning for window regulator, then the "one-touch up" function will be recovered.

Rear Door Window

Remove

1. Remove the rear door interior trim panel.

☞**Rear Door Interior Trim Panel Remove**

2. Remove the rear door waterproof membrane.

☞**Rear Door Waterproof Membrane Remove**

3. Raise the glass to a certain height, to align two clip barbs of the glass with the mounting holes in the door.
4. Remove the rear door window outer weatherstrip.

☞**Rear Door Window Outer Weatherstrip Remove**

5. Remove the rear door window inner weatherstrip.

☞**Rear Door Window Inner Weatherstrip Remove**

6. Remove 1 screw (1) fixing the rear quarter window assembly to the door sheet metal.
7. Remove 2 bolts (2) fixing the rear quarter window assembly to the door sheet metal.

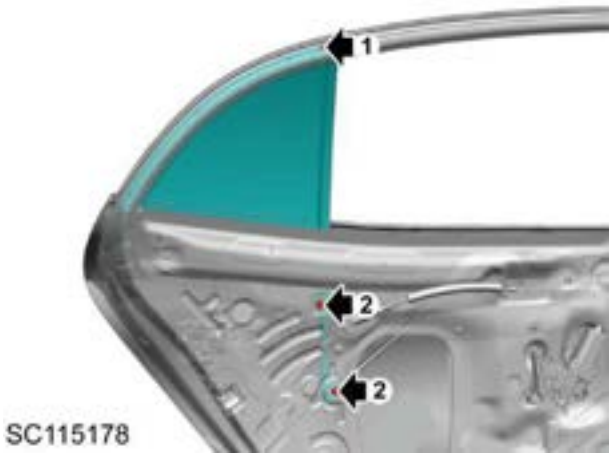

8. Pull open part of the rear door window glass run channel weatherstrip, move the rear quarter window assembly to the appropriate position.
9. Push 2 clip barbs fixing the glass to the window regulator outwards from the hole in the glass regulator bracket, and lift the glass to remove it from the window frame.

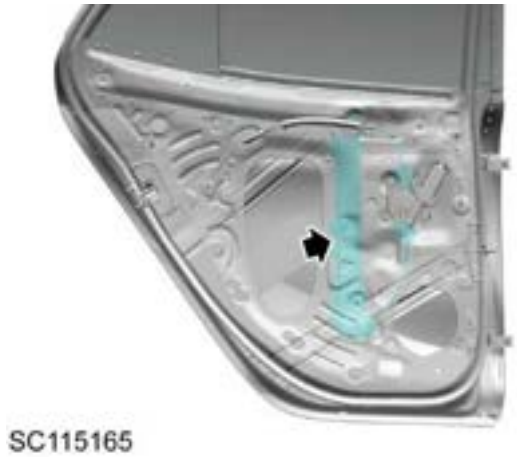

Refit

1. Carefully fit the glass between the inner and outer panels from the window frame, and fit glass run channel weatherstrips on both sides.
2. Lower the glass slowly until it reaches the slider of the glass regulator, align the glass with the clip, put the glass into the slider clip and fit it in place.
3. Fit 2 bolts fixing the rear quarter window assembly to the door panel, tighten them to **7-10Nm** , and check the torque.
4. Fix the rear quarter window assembly to the door panel, fit and tighten 1 screw.
5. Restore the rear door glass run channel weatherstrip.
6. Fit the rear door window inner weatherstrip.

☞**Rear Door Window Inner Weatherstrip Refit**

7. Fit the rear door window outer weatherstrip.

☞**Rear Door Window Outer Weatherstrip Refit**

8. Fit the rear door waterproof membrane.

☞**Rear Door Waterproof Membrane Refit**

9. Fit the rear door interior trim panel.

☞**Rear Door Interior Trim Panel Refit**

Rear Door Window Inner Weatherstrip

Remove

1. Remove the rear door interior trim panel.

Rear Door Interior Trim Panel Remove

2. Pull up to remove the rear door window inner weatherstrip.

SC115180

Refit

1. Align the weatherstrip opening with the door inner panel seam allowance, and fit the rear door window inner weatherstrip.
2. Fit the rear door interior trim panel.

Rear Door Interior Trim Panel Refit

Rear Door Window Outer Weatherstrip

Remove

1. Open the rear door.
2. Pull the outer weatherstrip up from the front to the rear end of the door in order and remove it.

SC115169

Refit

1. Align the rear door window outer weatherstrip with the door panel, and fit it onto the flanging of the door panel.
2. Close the rear door.

Rear Door Weatherstrip

Remove

1. Open the rear door.
2. Rear door weatherstrip - door side:
   a. Remove and discard 1 bolt fixing the door check to the body side.

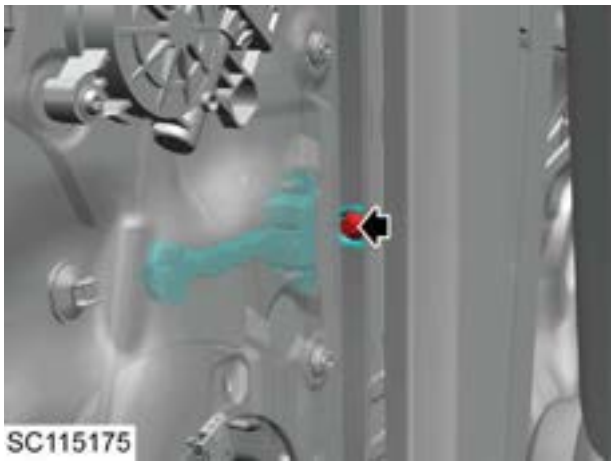

   b. Remove the rear door weatherstrip along the rear door.

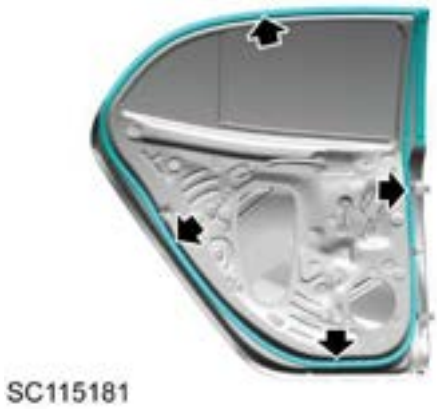

3. Rear door weatherstrip - body side:
   a. Open the rear door, and remove the rear door weatherstrip at body side.

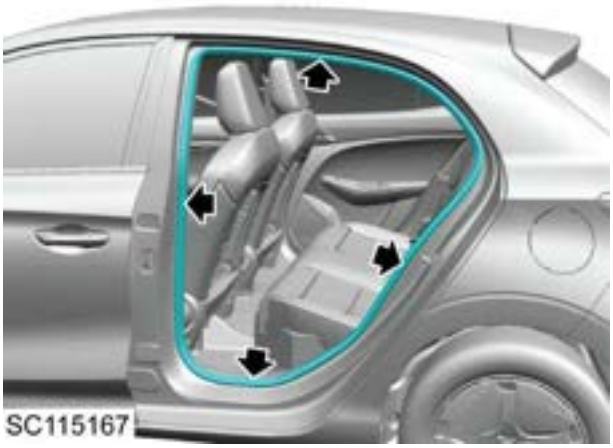

Refit

1. Rear door weatherstrip - body side:
   a. Fit the rear door weatherstrip at body side to the body along the rear door body side panel seam allowance, and fit the rear door weatherstrip at body side.
2. Rear door weatherstrip - door side:
   a. Fit the rear door weatherstrip to the rear door along the rear door inner panel seam allowance.
   b. Fit 1 bolt fixing the door check to the body side, tighten it to **19-25Nm** , and check the torque.
3. Close the rear door.

Rear Door Frame B-pillar Decorative Film

Remove

1. Remove the rear door window outer weatherstrip.

Rear Door Window Outer Weatherstrip Remove

2. Tear off and discard the rear door frame B pillar decorative film.

SC115183

Refit

1. Check the surface paint of the door frame, and ensure that the surface is spotless and flat (If there are spots and unevenness, first use non-woven fabric dipped in 50:50 alcohol to scrub the location of the film to ensure the cleanliness of the pasted parts).
2. Peel off the isolation paper on the back of the black film, remove the excess, perforated black film from the upper part along the split line, ensure that the left and right 2 points are aligned with the left and right edges of the panel and then apply the film from top to bottom while using a squeegee to discharge the air, and try to avoid repeatedly lifting and pasting the black film during the process.
3. After the black film has been completely laminated to the panel, use the squeegee to scrape the film back and forth 2-3 times to ensure that the air is fully discharged. Then use the handle to quickly remove the transparent protective film from the surface in one go, so as to avoid stopping in the middle, and ensure that the black film is tightly fitted and the surface is smooth and flat.
4. The excess black film on both sides of the window frame is wrapped by hand, and the rounded corners are trimmed until they are smooth and free from warping.
5. Check that the black film and the window frame fit tightly and the surface is flat without bubbles, creases, dewy white and other defects. If there is a defect, you need to repeat the above operation.

Note：During film sticking placement, the scraper must be used continuously to squeeze out bubbles. If rework is required, it is recommended to carry out it within 24 hours of attachment, and the risk of residual glue will increase after 24 hours. If it is removed after 24 hours, it is recommended to wipe it with alcohol.

6. Fit the rear door window outer weatherstrip.

Rear Door Window Outer Weatherstrip Refit

Rear Door Window Glass Run Channel Weatherstrip

Remove

1. Remove the rear door window.

Rear Door Window Glass Remove

2. Remove the rear door window frame trim.
3. Remove the rear door window glass run channel weatherstrip.

SC115171

Refit

1. Insert the rear part of the window glass run channel weatherstrip into the rear door window frame rear trim panel.
2. Align the weatherstrip opening with the door inner panel seam allowance, and fit the rear door window glass run channel weatherstrip.
3. Fit the rear door window frame trim.
4. Fit the rear door window.

Rear Door Window Glass Refit

Rear Door Waterproof Membrane

Remove

1. Remove the rear door interior trim panel.

Rear Door Interior Trim Panel Remove

2. Tear off the waterproof membrane.

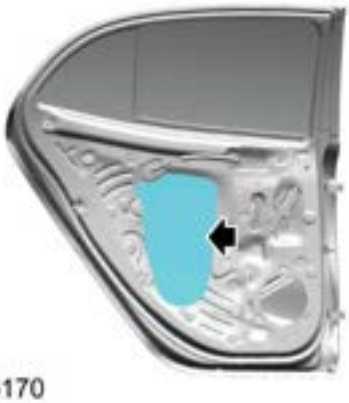

SC115170

Refit

1. Fit the waterproof membrane.
2. Fit the rear door interior trim panel.

Rear Door Interior Trim Panel Refit

Remove

1. Tear off and discard the rear door window glass upper decorative film.

SC115182

Refit

1. Check the surface paint of the door frame, and ensure that the surface is spotless and flat (If there are spots and unevenness, first use non-woven fabric dipped in 50:50 alcohol to scrub the location of the film to ensure the cleanliness of the pasted parts).
2. Peel off the isolation paper on the back of the black film, remove the excess, perforated black film from the upper part along the split line, ensure that the left and right 2 points are aligned with the left and right edges of the panel and then apply the film from top to bottom while using a squeegee to discharge the air, and try to avoid repeatedly lifting and pasting the black film during the process.
3. After the black film has been completely laminated to the panel, use the squeegee to scrape the film back and forth 2-3 times to ensure that the air is fully discharged. Then use the handle to quickly remove the transparent protective film from the surface at once, so as to avoid stopping in the middle.
4. The excess black film on both sides of the window frame is wrapped by hand, and the rounded corners are trimmed until they are smooth and free from warping.
5. Check that the black film and the window frame fit tightly and the surface is flat without bubbles, creases, dewy white and other defects. If there is a defect, you need to repeat the above operation.

Note：During film sticking placement, the scraper must be used continuously to squeeze out bubbles. If rework is required, it is recommended to carry out it within 24 hours of attachment, and the risk of residual glue will increase after 24 hours. If it is removed after 24 hours, it is recommended to wipe it with alcohol.

Remove

1. Disconnect the negative battery cable.
2. Pry off the screw trim cover.

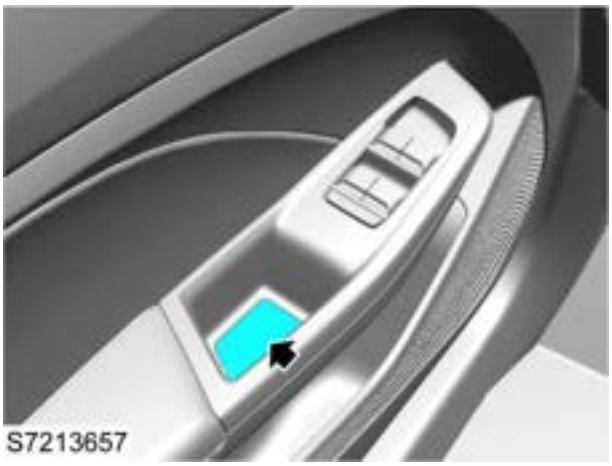

3. Remove 1 screw fixing the driver side power window switch to the door interior trim panel.

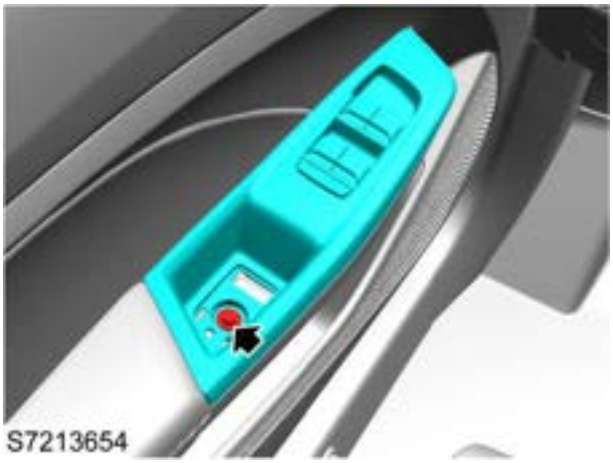

4. Pry off the clip fixing the driver side power window switch to the door interior trim panel.
5. Disconnect the harness connector and remove the driver side power window switch.

Refit

1. Connect the harness connector of the driver side power window switch.
2. Fix the driver side power window switch to the door interior trim panel, fit 1 screw, tighten it to **1.5-2.5NM** , and check the torque.
3. Fit the screw trim cover.
4. Connect the negative battery cable.

Power Window Switch - Others

Remove

1. Disconnect the negative battery cable.
2. Pry off the screw trim cover.

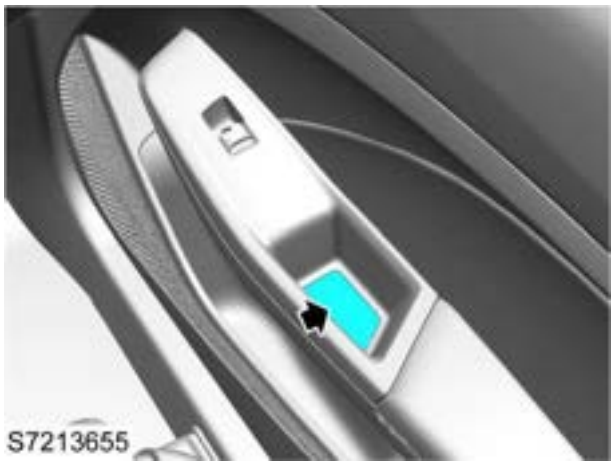

3. Remove 1 screw fixing the passenger side power window switch to the door interior trim panel.

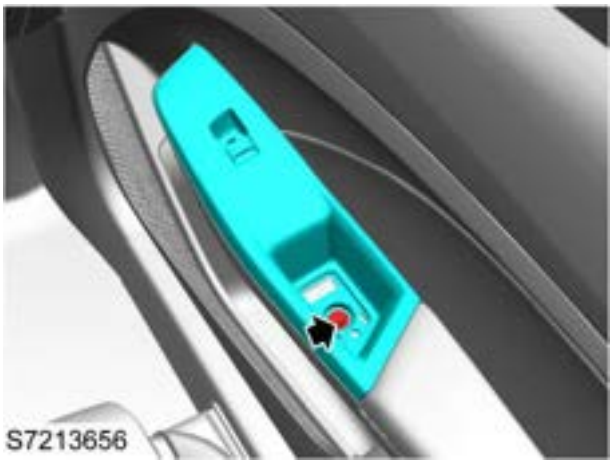

4. Pry off the clip fixing the passenger side power window switch to the door interior trim panel.
5. Disconnect the harness connector and remove the passenger side power window switch.

Refit

1. Connect the harness connector of the passenger side power window switch.
2. Fix the passenger side power window switch to the door interior trim panel, fit 1 screw, tighten it to **1.5-2.5NM** , and check the torque.
3. Fit the screw trim cover.
4. Connect the negative battery cable.

Door Lock Switch

Remove

1. Disconnect the negative battery cable.
2. Remove the instrument panel driver side trim panel assembly.

☞ **Instrument Panel Driver Side Trim Panel Assembly Remove**

3. Loosen the clip and remove the door lock switch.

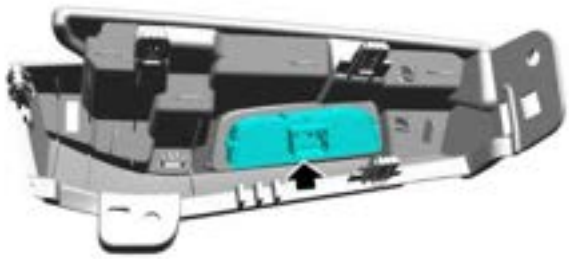

S7213653

Refit

1. Locate the door lock switch to the trim panel, press the clips, and ensure that the clips are fully engaged.
2. Fit the instrument panel driver side trim panel assembly.

☞ **Instrument Panel Driver Side Trim Panel Assembly Refit**

3. Connect the negative battery cable.

Fender

Specification

Torque

Description	Value
Bolt-fender to body	7-10Nm

Service Guide

Fender

Remove

1. Remove the headlamp assembly.

☞ Headlamp Assembly Remove

2. Remove the front wheelhouse liner.

☞ Front Wheelhouse Liner Remove

3. Remove the A/C air inlet grille assembly side water retaining block, and remove 2 split pins fixing the A/C air inlet grille panel seals to the A/C air inlet grille assembly.

4. Release the clips at the side corners of the A/C air inlet grille, and remove the side corners.

5. Loosen the clips, and remove the windscreen trim cover.

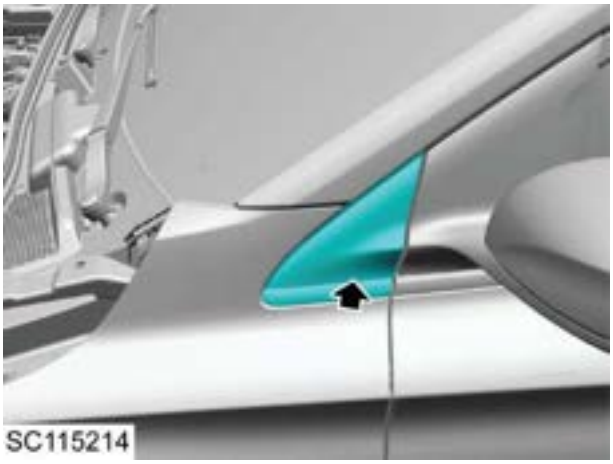

6. Remove 1 screw (2) fixing the fender to the body.
7. Remove the soundproof cotton, remove 7 bolts (8) and 1 nut (3) fixing the fender to the body, and remove the fender.

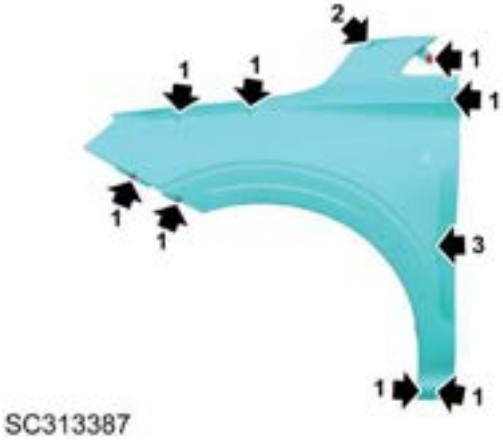

8. If necessary, remove 2 bolts fixing the fender to the body, and remove the fender bracket.

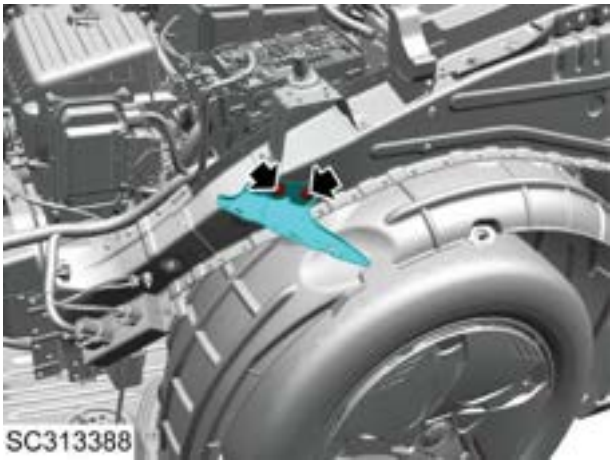

Refit

1. If removed, fix the fender bracket to the body, fit and tighten 2 bolts.
2. Locate the fender on the body, fit the fasteners and pre-tighten them.
3. Adjust the clearance between the fender and adjacent panels. For clearance information, please refer to "Body Dimension" in the "Body Panel and Painting" section.

☞ **Front End Information**

4. Fit the front windscreen trim cover, and press the clip in place.
5. After adjustment, tighten 8 bolts fixing the fender to the body to **7-10Nm** ; tighten 1 nut fixing the fender to the body to **7-10Nm** ; tighten 1 screw fixing the fender to the body to **7-10Nm** ; check the torque, and fit the soundproof cotton.
6. Fit the A/C air inlet grille side corner and press the clip in place.
7. Fit the A/C air inlet grille panel seal and press the clip in place.
8. Fit the A/C air inlet grille panel side seal.
9. Fit the front wheelhouse liner.

☞ **Front Wheelhouse Liner Refit**

10. Fit the headlamp assembly.

☞ **Headlamp Assembly Refit**

Front-end Module

Specification

Torque

Description	Value
Bolt-water tank upper cross member to front buffer beam support	7-10Nm
Bolt-water tank upper cross member bracket to body	7-10Nm
Bolt-evaporation tank pipeline to water tank upper cross member	7-10Nm

Service Guide

Front-end Module

Remove

1. Remove the front bumper.

Front Bumper Remove

2. Remove the bonnet lock.

Bonnet Lock Assembly Remove

3. Remove the bonnet support rod.

Bonnet Support Rod Remove

4. Remove the front bumper beam.

Front Bumper Beam Remove

5. Remove 2 bolts fixing the bonnet lock bracket to the front-end module.

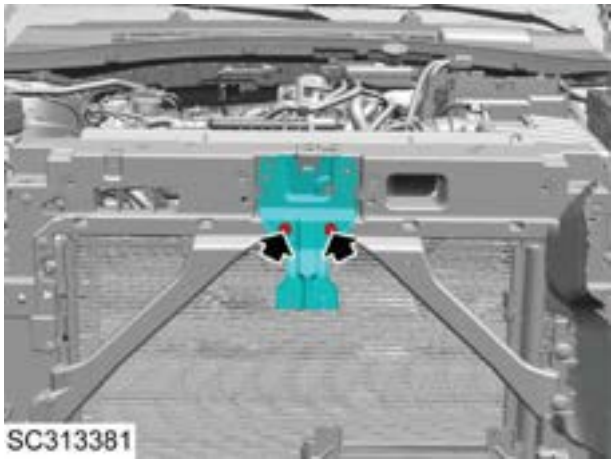

6. Remove 2 bolts fixing the bonnet support rod bracket to the front-end module, and remove the bonnet support rod bracket.

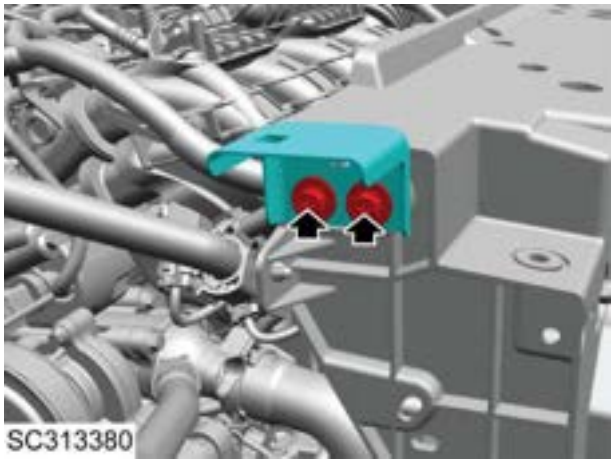

7. Remove 2 bolts fixing the front impact module to the front-end module, and remove the harness.

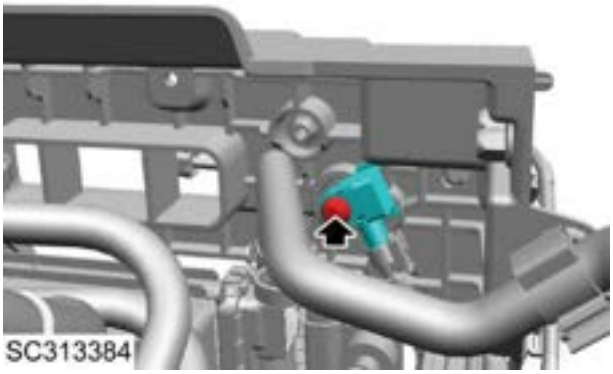

8. Remove 2 bolts fixing the front-end module to the radiator, and remove the front-end module.

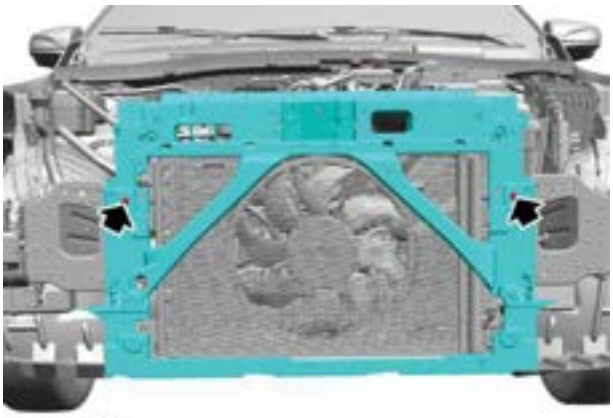

Refit

1. Locate the upper radiator beam to the body.
2. Fit 2 bolts fixing the front-end module to the water tank, tighten them to **7-10Nm** , and check the torque.
3. Fit 2 bolts fixing the front-end impact module to the front-end module, tighten them to **7-10Nm** , and check the torque.
4. Fit 2 bolts fixing the bonnet support rod bracket to the front-end module, tighten them to **7-10Nm** , and check the torque.
5. Fit 2 bolts fixing the bonnet lock bracket to the front-end module, tighten them to **7-10Nm** , and check the torque.
6. Fit the front bumper beam.

Front Bumper Beam Refit

7. Fit the bonnet support rod.

Bonnet Support Rod Refit

8. Fit the bonnet lock.

Bonnet Lock Refit

9. Fit the front bumper.

Front Bumper Refit

Bonnet

Specification

Torque

Description	Value
Nut-hood linked to hood	19-25Nm
Nut-Hinge to Body	19-25Nm
Nut-Hinge to Hood	19-25Nm
Bolt-hood lock body to body	7-10Nm
Screw-hood release handle to lower trim panel	1.3-1.9Nm

Service Guide

Bonnet Adjustment

Adjustment

1. Mark the profiles of the bonnet with a non-permanent marker.
2. Loosen 4 nuts fixing the hinges (bonnet side) on both sides to the bonnet.

SC313390

3. Adjust the bonnet to uniformise the gaps between the bonnet and the front bumper fascia, the headlamp and the front fender (for gap information, please refer to "Body Dimension" in the "Body Panel and Painting" section), and to make it fit with the front bumper fascia, the headlamp and the front fender in size.

☞ **Front End Information**

4. For clearance information, please refer to "Body Dimension" in the "Body Panel and Painting" section.
5. Tighten the nuts of the tailgate hinge flap to **19-25Nm** , and check the torque.

Bonnet Assembly and Hinge

Remove

Warning：Special attention should be paid to avoid vehicle damage and personal injury.

1. Open and support the bonnet firmly.
2. Remove 4 nuts fixing the hinges on both sides to the bonnet.

SC313390

3. With assistance, remove the bonnet assembly.
4. Mark the position of the hinges relative to the bonnet for positioning during refit.
5. Remove the A/C air inlet grille panel side seals.
6. Remove the fender.

☞ **Fender Remove**

7. Remove 4 nuts fixing the hinges on both sides to the front end of the body, and remove the hinges on both sides.

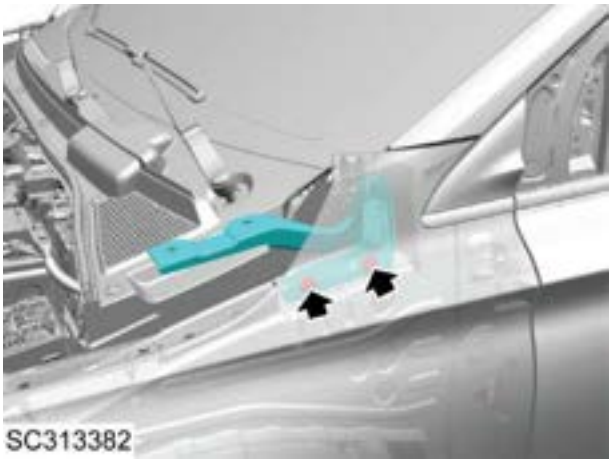

SC313382

8. Remove the hinges on both sides.

Refit

Warning：

1. Properly locate the hinges on both sides to the front-end of the body and align the positions marked at the time of removal.
2. Fit 4 bolts fixing the hinges on both sides to the front end of the body, tighten them to **19-25Nm** , and check the torque.
3. Fit the fender.

☞ **Fender Refit**

4. Fit the A/C air inlet grille panel side seal.
5. With assistance, locate the bonnet onto the vehicle.

Caution：Do not damage the threads of bolts when inserting the bolts into mounting holes.

6. Fit 4 nuts fixing the hinges on both sides to the bonnet, but do not tighten them to the specified torque.
7. Check if the bonnet is properly positioned, and adjust the gap and flush between the bonnet and the front fender carefully to meet DTS (dimension technical specification) requirements.

☞ **Front End Information**

8. After adjustment, tighten 4 nuts to **19-25Nm** , check the torque and close the bonnet.

Bonnet Lock Body Assembly

Remove

1. Open and support the bonnet firmly.
2. Remove the front bumper and bracket.

☞**Front Bumper and Bracket Remove**

3. Mark the position of the lock on the front-end module bracket for positioning during refit.
4. Remove 3 bolts fixing the bonnet lock to the bonnet lock mounting panel.

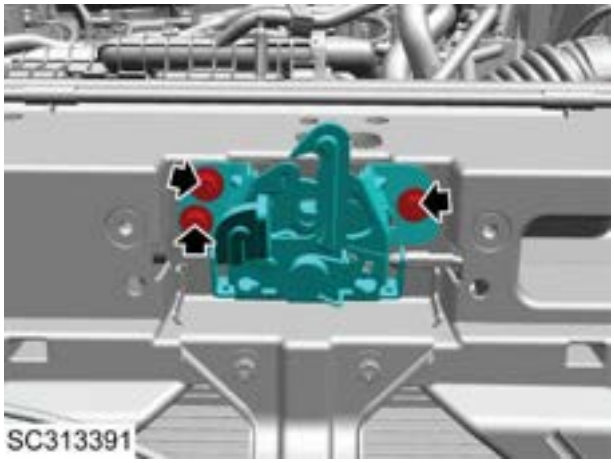

5. Separate the bonnet cable assembly from the lock to remove the bonnet lock assembly.

Refit

1. Connect the bonnet lock release cable assembly and the lock assembly firmly, i.e. fit the spherical end of the cable core wire into the hook slot of the bonnet lock, put the core wire into the long slot of the bonnet lock case, and align the circular groove of the main cable pipe connector with the mounting slot of the lock case, then press it hard until it clicks.
2. Fit the bonnet lock assembly on the plate and align it with the position marked during removal.
3. Fit 3 bolts fixing the lock assembly to the mounting panel, and do not tighten the bolts to the specified torque at this step.
4. Close the bonnet, observe the relative position of the lock and lock catch, adjust the lock and allow the lock catch to enter into the lock tongue.
5. After adjustment, tighten 3 bolts to **7-10Nm** , and check the torque.
6. Fit the front bumper and bracket.

☞**Front Bumper and Bracket Refit**

7. Close the bonnet.

Bonnet Release Cable

Remove

1. Open the bonnet and support it with a rod firmly.
2. Remove the bonnet lock assembly.

☞**Bonnet Lock Remove**

3. Remove the A/C air inlet grille panel and accessories.

☞**A/C Air Inlet Grille Panel and Accessories Remove**

4. Remove the instrument panel lower closure panel.

☞**Instrument Panel Lower Closure Panel Remove**

5. Release the bonnet release cable assembly from the bonnet lock.
6. Loosen the retaining clips of the bonnet release cable in turn.
7. Release the bonnet release cable from the engine compartment.
8. Release the bonnet release cable assembly from the release handle.
9. Pull the bonnet release cable assembly out of the engine compartment.

Refit

1. Locate the bonnet release cable assembly to the engine compartment, fit the flat blade end to the driver compartment through the bulkhead hole of the front engine compartment, and secure it in the bulkhead hole with the rubber seal ring of the cable assembly.
2. Place the ball end of the bonnet release cable assembly into the slot.
3. Fit the retaining clip of bonnet release cable.
4. Fit the instrument panel lower closure panel.

☞**Instrument Panel Lower Closure Panel Refit**

5. Fit the A/C air inlet grille panel and accessories.

☞**A/C Air Inlet Grille Panel and Accessories Refit**

6. Fit the bonnet lock assembly.

☞**Bonnet Lock Refit**

7. Pull the release handle of the bonnet in the driver compartment, and check if the bonnet works properly when it is opened.

Bonnet Weatherstrip

Remove

1. Open and support the bonnet firmly.
2. Remove the bonnet weatherstrip along the A/C air inlet grille.

Refit

1. Fit the bonnet weatherstrip along the A/C air inlet grille, and clamp it.
2. Close the bonnet.

Seals at A/C Air Inlet Grille Panel Side

Remove

1. Remove the side seal of A/C air inlet grille panel.

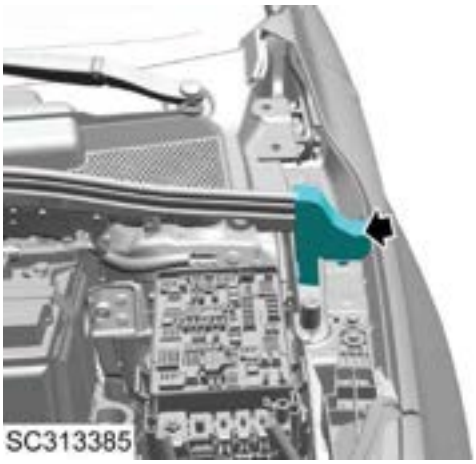

Refit

1. Fit the A/C air inlet grille panel side seal.

Remove

Warning : Special attention should be paid to avoid vehicle damage and personal injury.

1. Open and support the bonnet properly.
2. Remove the bonnet strut.

Refit

Warning :

1. Fit the bonnet strut rod and put it back.
2. Close the bonnet.

Bonnet Release Handle

Remove

1. Pull the bonnet release handle.
2. Remove 2 self-tapping screws fixing the bonnet release handle assembly to the instrument panel lower closure panel.

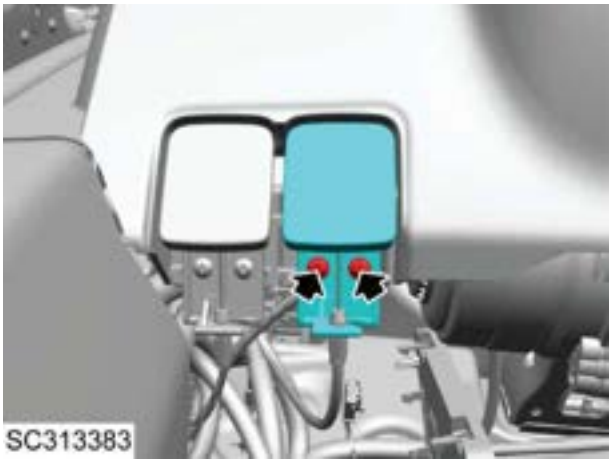

3. Release the bonnet release cable assembly from the release handle so as to remove the bonnet release handle assembly.

Refit

1. Place the ball end of the bonnet release cable assembly into the handle slot.
2. Align the handle with the mounting hole.
3. Fit 2 self-tapping screws fixing the release handle to the lower trim panel, tighten them to **1.3-1.9Nm** , and check the torque.
4. Pull the release handle of the bonnet in the driver compartment, and check if the bonnet works properly when it is opened.

Remove

1. Open the bonnet.
2. Rotate to remove 4 bonnet bumper blocks.

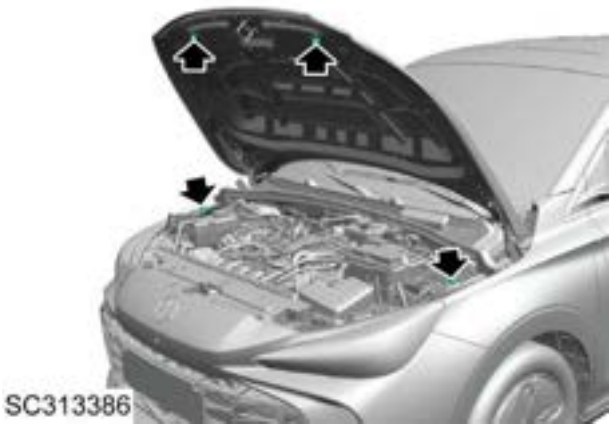

Refit

1. Fit 4 bonnet bumper blocks and rotate them to proper position.
2. Close the bonnet.

Tail Gate

Specification

Torque

Description	Value
Bolt-Tailgate to Body	26-34Nm
Nut-Tailgate hinge to Body	26-34Nm
Bolt-tail door lock body assenbly to tail door	19-25Nm
Bolt-tailgate latch to body	19-25Nm
Bolt-body end gas spring mounting ball head bracket to body	19-25Nm
Bolt-tailgate end gas spring mounting ball head bracket to tail	19-25Nm
Bolt-tailgate bumper to body	7-10Nm
Bolt-tailgate bumper to tailgate	7-10Nm

Service Guide

Tail Gate Adjustment

Adjustment

1. Mark the profiles of the trunk lid with a non-permanent marker.
2. Loosen 4 bolts fixing the hinge (lid side) to the trunk lid.

SC253442

3. Adjust the tailgate to make the gap between the tailgate and the tail lamp and that between the tailgate and the rear bumper fascia uniform and make the tailgate flush with the tail lamp and the rear bumper fascia.
4. For clearance information, please refer to "Body Dimension" in the "Body Panel and Painting" section.

☞ **Rear End Information**

5. Tighten 4 bolts fixing the hinges to the tailgate to **26-34Nm** , and check the torque.

Tail Gate Assembly and Hinge

Remove

1. Open the tailgate, and make sure that it is reliably supported to keep it open during removal.

Warning：Due to heavy tailgate, safety stands shall be set before operation, and pay special attention to avoid vehicle damage and personal injury.

2. Disconnect the negative battery cable.
3. Remove the tailgate interior trim panel.

☞Tailgate Interior Trim Panel Remove

4. Disconnect the tailgate connecting harness.

☞Tailgate Connecting Harness Remove

5. Remove the tailgate air spring.

☞Tailgate Air Spring Remove - Manual

6. With assistance, remove 4 bolts fixing the hinges on both sides to the tailgate. If it is required to refit the tailgate, a reference position shall be marked on the hinge.

SC253442

7. Remove the tailgate assembly.
8. Mark the position of the tailgate hinge on the vehicle body with a non-permanent marker.
9. Pry open the tailgate end of roof interior trim panel to access the retaining nuts of tailgate hinges.
10. Remove 2 nuts fixing the left and right tailgate hinges to the body, so as to remove the tailgate hinge assembly.

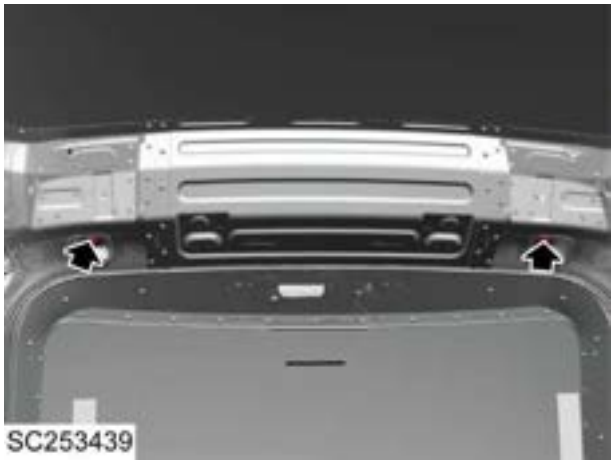

SC253439

Refit

1. Locate the tailgate hinge assembly to the marked mounting location on the body.
2. Fit 4 nuts fixing the left/right tailgate hinges to the body, tighten them to **26-34Nm** , and check the torque.
3. Fit the tailgate end of roof interior trim panel.
4. With assistance, fit the tailgate to the correct position.

Warning：Due to heavy tailgate, safety stands shall be set before operation, and pay special attention to avoid vehicle damage and personal injury.

5. Check the fit clearance and flushness between the tailgate and the bodyside panel and rear end panel. For clearance information, please refer to "Body Dimension" in the "Body Panel and Painting" section.

☞ Rear End Information

6. After adjustment, tighten 4 bolts to **26-34Nm** , and check the torque.
7. Fit the tailgate air spring.

☞Tailgate Air Spring Refit - Manual

8. Fit the tailgate connecting harness.

☞Tailgate Connecting Harness Refit

9. Fit the tailgate interior trim panel.

☞Tailgate Interior Trim Panel Refit

Tail Gate Lock Assembly

Remove

1. Remove the tailgate interior trim panel.

Tailgate Interior Trim Panel Remove

2. Remove 3 bolts fixing the tailgate lock to the tailgate, disconnect the lock harness connector, and remove the tailgate lock.

SC253445

Refit

1. Locate the tailgate lock to the tailgate panel, and connect the harness connector.
2. Fit 3 bolts fixing the tailgate lock to the tailgate, but do not tighten them.
3. Check and adjust the fit clearance and flushness between the tailgate lock and the surrounding panels, tighten them to **19-25Nm** after adjustment, and check the torque.
4. Fit the tailgate interior trim panel.

Tailgate Interior Trim Panel Refit

Tail Gate Striker

Remove

1. Remove the trunk sill trim panel.

☞Trunk Sill Trim Panel Remove

2. Mark the location of tailgate striker relative to the vehicle body.
3. Remove 2 bolts fixing the tailgate buckle to the body, and take down the tailgate buckle.

Refit

1. Pre-fasten the tailgate striker according to the mark of its location relative to the vehicle body.
2. Open and close the tailgate several times, check and adjust the fit clearance and flushness between the tailgate and the surrounding panels by moving the bottom panel of the striker.
3. Make sure that the tailgate lock is fully locked.
4. Fit 2 bolts fixing the striker to the body, tighten them to **19-25Nm** , and check the torque.
5. Fit the trunk sill trim panel.

☞Trunk Sill Trim Panel Refit

Tail Gate Gas Spring

Remove - Manual

1. Open the tailgate, and make sure it is securely supported during removal.

Warning：Due to heavy tailgate, safety stands shall be set before operation, and pay special attention to avoid vehicle damage and personal injury.

2. Pry off the steel spring retaining clips at both ends of right (left) gas spring, unplug the ball head sockets at both ends from the ball heads of the tailgate, and remove the tailgate gas spring.

Refit - Manual

1. Align the ball head socket at sleeve end of gas spring with the ball head on the mounting bracket at right (left) body end, and make sure the gas spring piston is downward.
2. Hold the sleeve, push the ball head socket onto the ball head with thumb. If the two parts are fitted well, a “crack” sound will be heard.

Caution：To avoid damaging the airtightness of the air spring, never hold the centre of the air spring and laterally apply force to it by hand.

3. Align the ball head socket at piston end of right (left) gas spring with the ball head on the tailgate, hold the end of the piston, push the ball head socket onto the ball head with thumb forcibly. If the two parts are fitted well, a "crack" sound will be heard.
4. Fit steel spring pieces to the ball head sockets at both ends of right (left) gas spring, and ensure that they are properly located in the spring piece slots.

Remove

Warning : Due to the heavy weight of the tailgate, it shall be operated after setting the safety support, and special attention shall be paid to avoid vehicle damage and personal injury.

1. Remove the tailgate air spring.

☞Tailgate Air Spring Remove - Manual

2. Remove 1 bolt fixing the ball head mounting brackets of the gas spring at right (left) tailgate end to the tailgate, and remove the ball head mounting brackets of the gas spring at tailgate end.

3. Remove 2 bolts fixing the ball head mounting brackets of the gas spring at right (left) tailgate end to the body, and remove the ball head mounting brackets of the gas spring at body end.

Refit

1. Fit 2 bolts fixing the ball head mounting bracket of air spring at right (left) body end to the body, tighten them to **19-25Nm** , and check the torque.
2. Fit 1 bolt fixing the ball head mounting bracket of gas spring at right (left) tailgate end to the tailgate, tighten it to **19-25Nm** , and check the torque.
3. Fit the tailgate air spring.

☞Tailgate Air Spring Refit - Manual

Tail Gate Buffer Block

Remove

1. Open the tailgate, and make sure it is securely supported during removal.

Warning：Due to heavy tailgate, safety stands shall be set before operation, and pay special attention to avoid vehicle damage and personal injury.

2. Remove 1 bolt fixing the tailgate bumper block to the tailgate.

3. Pry off the tailgate bumper block cover, and remove 1 bolt fixing the tailgate bumper block to the body

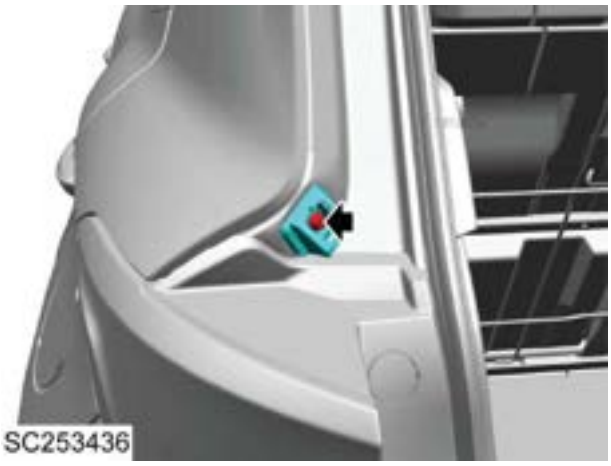

4. If necessary, the buffer blocks on both sides of the lower part of the tailgate can be rotated and removed by hand or tools.

Refit

1. Fit the lower buffer blocks on both sides of the tailgate and rotate them to a proper position.
2. Fit 1 bolt fixing the tailgate bumper block to the body, tighten it to **7-10Nm** , and check the torque.
3. Fit the tailgate bumper block cover plate.
4. Fit 1 bolt fixing the tailgate bumper block to the tailgate, and tighten it to **7-10Nm** .
5. Close the tailgate.

Tail Gate Weatherstrip

Remove

1. Open the tailgate, and make sure it is securely supported during removal.
2. Carefully pull out and remove the tailgate weatherstrip.

Refit

1. Open the tailgate and ensure it is firmly supported during refit.
2. Align the tailgate weatherstrip joint with the seam allowance close to the panel centre in the left tail lamp mounting area and insert the weatherstrip into the seam allowance.
3. Insert the weatherstrip from the joint position into the seam allowance from top to bottom in both the clockwise and counterclockwise directions respectively.
4. Tap the weatherstrip in place with the rubber hammer.

Note : Temperature requirements for sealing strip installation: the surface temperature of sealing strip shall be within 16 ℃ - 60 ℃.

Tailgate Open Switch

Remove

1.

Refit

1.

Fuel Filler Flap

Specification

Torque

Description	Value
Bolt-Fuel filler door assembly hinge to body	7-10Nm

Service Guide

Fuel Filler Flap Assembly

Remove

1. Open the fuel filler door.
2. Remove 2 bolts fixing the fuel filler door assembly hinge to the body.

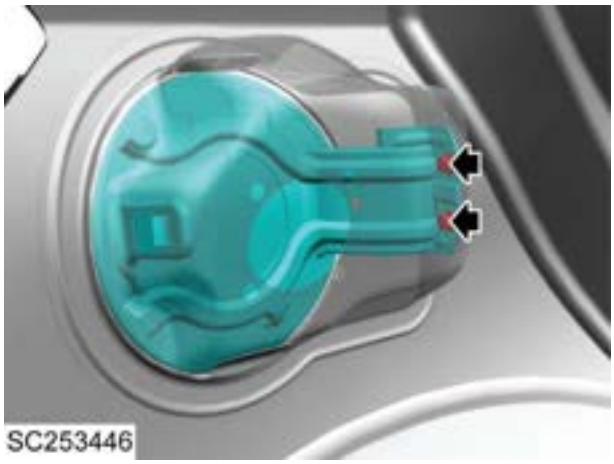

3. Remove the fuel filler door assembly.

Refit

1. Locate the fuel filler door assembly to the body, fit 2 bolts and pre-tighten them.
2. Open and close the fuel filler door several times, and adjust the position of the fuel filler door by moving the hinge flap, so that its clearance and flushness with the matching parts meet the requirements. Refer to the "Body Dimension" in the "Body Panel and Painting" section.

☞ **Body Side Information**

3. Tighten the bolt fixing the fuel filler door assembly to the body to **7-10Nm** , and check the torque.
4. Close the fuel filler door assembly.

Remove

1. Pull up the fuel filler door release handle.
2. Remove 2 screws fixing the fuel filler door handle to the driver side lower trim panel.

3. Release the fuel filler door release cable from the release handle, and remove the fuel filler door release handle.

Refit

1. Insert the cylindrical end of the fuel filler door release cable assembly into the cylindrical hole of the release handle, meanwhile place the core wire into the long slot of the handle, and align the cable sleeve end with the mounting slot of the release handle, then press it hard until a "click" is heard, which indicates the completion of the connection.
2. Fix the fuel filler door release handle to the instrument panel lower trim panel, fit and tighten 2 screws.

Remove

1. Pull the release handle of the fuel filler door on the driver side lower trim panel to open the fuel filler door.
2. Release the release cable assembly of the fuel filler door from the release handle of the fuel filler door.
3. Remove the left A pillar lower trim panel.

A Pillar Lower Trim Panel

4. Remove the door sill trim panel.

Door Sill Trim Panel

5. Remove the rear seat cushion assembly.

Rear Seat Cushion Assembly

6. Remove the right trunk side trim panel.

Trunk Side Trim Panel

7. Lift the rear carpet to expose the cable assembly, and release the cable from the harness clips.
8. Push the shutter out from the body, and draw the release cable assembly of the fuel filler door from the fuel filler door.

Refit

1. Pass the small end of fuel filler flap release cable assembly through the hole on side panel from the fuel filler flap to the trunk, and push the shutter into the hole hard along the hole axis until a "click" sound is heard and both clips of the shutter are clamped into the side panel completely.
2. Fit the cable assembly to the rear part of the rear seat through the right side of the trunk, fix the cable to the clip (near the instrument panel) along the left sill, then fit the cylindrical end of the cable assembly into the notch of the release handle under the instrument panel.
3. Pull the fuel filler door release handle at the driver side lower trim panel, check the connections of the fuel filler door release cable assembly.
4. Restore the carpet.
5. Fit the right trunk side trim panel.

Trunk Side Trim Panel

6. Fit the rear seat cushion assembly.

Rear Seat Cushion Assembly

7. Fit the door sill trim panel.

Door Sill Trim Panel

8. Fit the left A pillar lower trim panel.

A Pillar Lower Trim Panel

9. Close the fuel filler door.

Body Control Module

Specification

Torque

Description	Value
Bolt-BCM to Body	5-7Nm

Description and Operation

System Layout

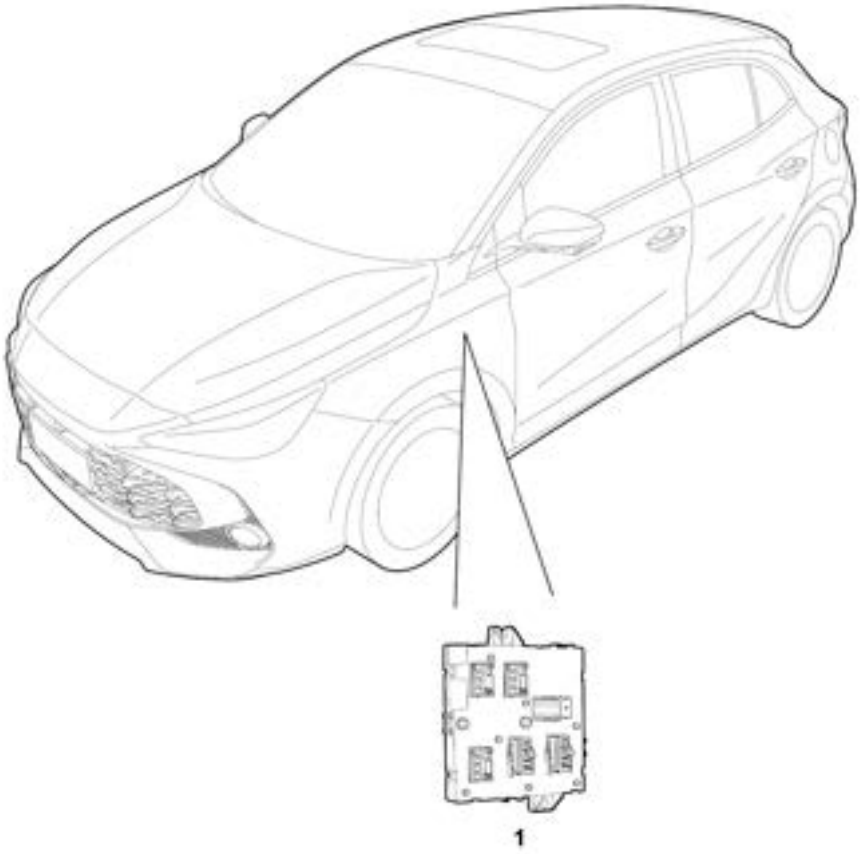

1. Body Control Module

System Control Diagram

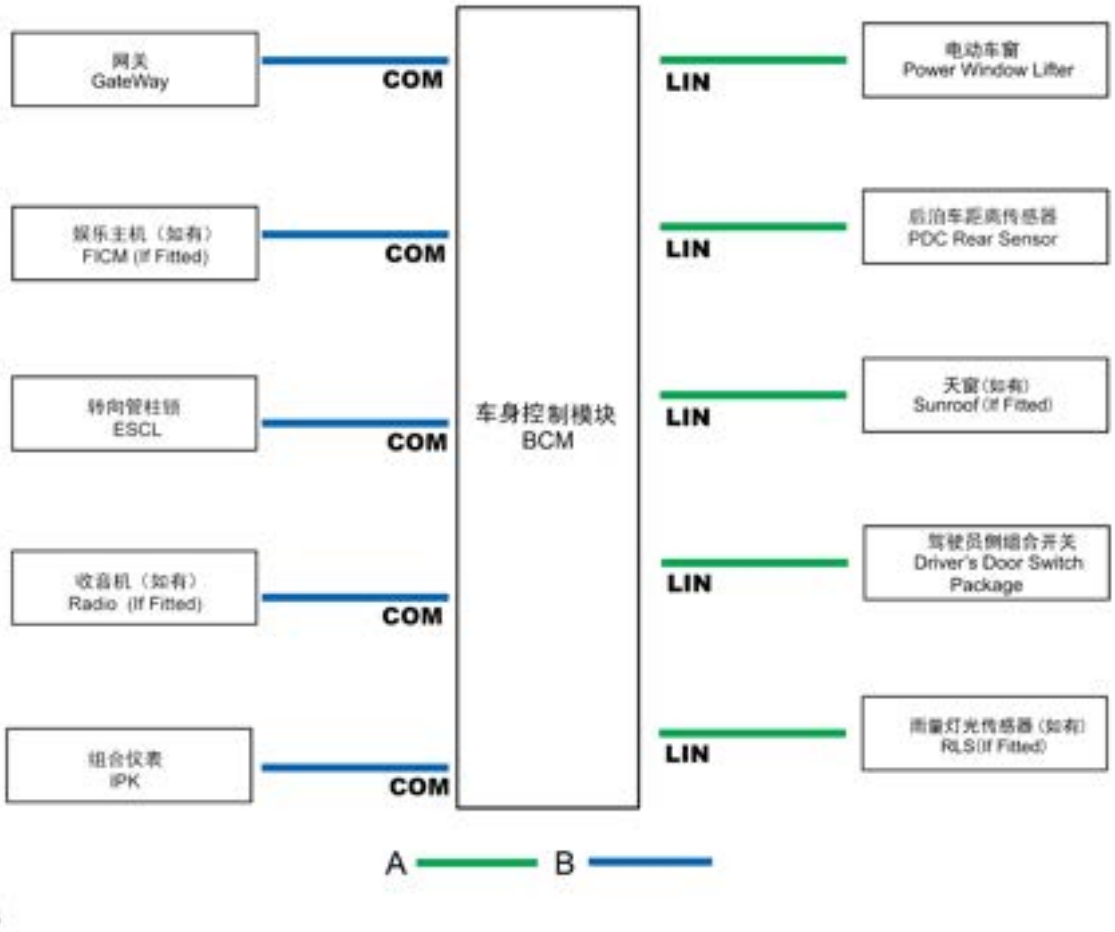

A = LIN Bus; B = Body HS CAN Bus

Description

TheBCM includes the microprocessor in low power mode, electrically erasable programmable read-only memory (EEPROM),CAN ,LIN transceiver and power supply. TheBCM controls most of the body functions. It interacts with other primary electrical systems through the HSCAN bus and with other secondary electrical systems through theLIN bus. TheBCM provides power for most of the vehicle electric components.

TheLIN communicates directly with the other components through the body HSCAN bus andLIN bus:

Operation

Overview

When the Start switch is in ACC position, theBCM allows the washer/wiper, power window system and part of the lighting system to operate. When the Start switch is in ON/READY position, theBCM communicates with and transmits information to otherECU via theCAN andLIN bus.

Sleep Mode

With the Start switch off, and theBCM andLIN buses disabled, if the battery is still connected, theBCM will stay in sleep mode and be prepared for receiving the wake-up signal.

Wake-up Mode

In sleep mode, theBCM will wake up when it receives a valid wake-up signal

Detailed Information List of Component Pins

End View and Pin Information of BCM Harness Connector FC169

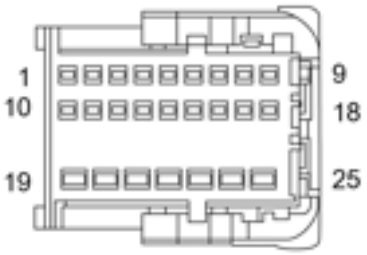

Pin No.	Description
1	Front Right Direction Indicator Lamp High Side Drive
2	-
3	Front Right Low Beam High Side Drive
4	Front Right High Beam High Side Drive
5	Front Left Low Beam High Side Drive
6	Front Left High Beam High Side Drive
7-8	-
9	KL15 Relay
10-11	-
12	Front Right Fog Lamp
13	-
14	Daytime Running Lamp High Side Drive
15	Front Left Direction Indicator Lamp High Side Drive
16	-
17	ACC Wake-up
18	-
19	Power Supply 1
20	Power Supply 3
21	Power Supply 5
22	Power Supply 6
23-24	-
25	Power Supply 7

View and Pin Information of BCM Harness Connector BY222

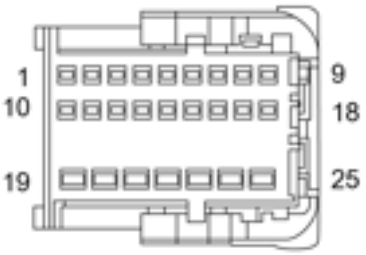

Pin No.	Description
1	-
2	Interior Reading Lamp
3	-
4	Light Delay Signal
5	-
6	Front Left Fog Lamp
7	High-mounted Stop Lamp
8	Rear Side Lamp
9-12	-
13	Trunk Lamp
14	Wake-up Signal
15	License Plate Lamp
16	Reverse Lamp
17	Right Brake Lamp
18	Rear Fog Lamp
19	Door Lock Motor Drive +
20	Door Lock Motor Drive -
21-22	-
23	Power Supply 2
24-25	-

End View and Pin Information of BCM Harness Connector FC216

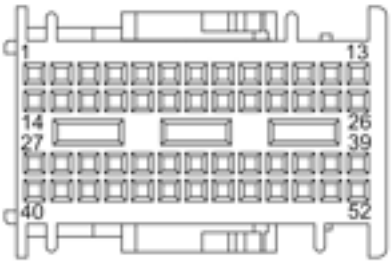

Pin No.	Description
1-3	-
4	Front Wiper Stop Signal
5-8	-
9	Brake Lamp Switch
10-11	-
12	Clutch Switch Signal
13	Bonnet Open Signal
14-22	-
23	LIN7
24-27	-
28	Front Windscreen Washer Relay
29-38	-
39	Front Wiper Speed Relay
40	-
41	Horn Relay
42-43	-
44	Rear Window Washer Relay
45	Rear Wiper Relay
46-51	-
52	Front Wiper Enable Relay

End View and Pin Information of BCM Harness Connector FA282

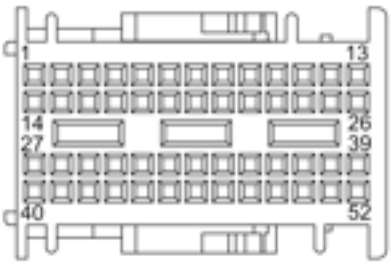

Pin No.	Description
1	Driving Mode Switch Signal
2	Direction Indicator Switch Signal
3	-
4	SSB Reference Signal
5	-
6	Secondary Switch Signal
7	KLR Relay
8-12	-
13	LIN3
14	-
15	ACC Switch Signal
16	Hazard Waring Lamp Switch Signal
17	KL15 Relay
18	P Gear Lock High Side Drive
19	Light/Wiper Stalk Switch Ground
20	Airbag Impact Signal
21-25	-
26	Horn Switch Signal
27	-
28	Front Wiper Intermittent Signal
29	Solar/Light Sensor Power Supply
30	Rear Wiper Switch Signal
31	Alcohol Lock Detection Signal
32-33	-
34	RUN Indicator
35	Flameout Signal
36	Light Switch Signal
37	ACC Indicator
38-39	-
40	High Beam Switch Signal
41	Fog Lamp Switch Signal
42	Lamp Sensor Signal

43	Windshield Washer Switch Signal
44	Front Wiper Switch Signal 1
45	-
46	Ignition Switch Power Supply
47	-
48	Front Wiper Switch Signal 2
49	SSB Signal
50	Power System State High Side Drive
51	Passive Entry and Passive Start Antenna - Centre Power Supply
52	Passive Entry and Passive Start Antenna - Centre Ground

End View and Pin Information of BCM Harness Connector BY223

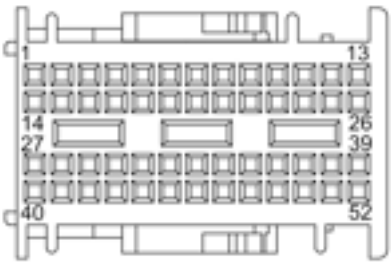

Pin No.	Description
1	Master Control Door Lock Status Indicator
2	Master Control Lock/Unlock Switch Signal
3-4	-
5	Ground 1
6	Front Passenger Door Handle Switch Signal
7-8	-
9	Driver Side Door Handle Antenna Switch Signal
10	Left Rear Window Down Relay Drive
11	-
12	Right Rear Window Up Relay Drive
13-14	-
15	Right Blind Spot Monitoring Indicator
16	Left Blind Spot Monitoring Indicator
17	Front Passenger Door Lock ON Signal
18	-
19	Tailgate ON Signal
20	Tailgate Switch Release Signal
21	-
22	Driver Door Lock ON Signal
23	Right Rear Window Down Relay Drive
24	Right Front Window Down Relay Drive
25	Right Front Window Up Relay Drive
26	Left Rear Window Up Relay Drive
27	Passive Entry and Passive Start Antenna - Bumper Ground
28	Passive Entry and Passive Start Antenna - Bumper Power Supply
29	Passive Entry and Passive Start Antenna - Rear Power Supply
30	Passive Entry and Passive Start Antenna - Rear Ground
31	Right Rear Window Automatic Switch Signal
32	Left Rear Window Down Switch Signal
33	Left Rear Window Automatic Switch Signal
34	Left Rear Door Lock Switch Signal
35	Driver Door Key Unlock/Lock Signal
36	Front Passenger Window Up Switch Signal

37	Rear Wiper Switch Signal
38	-
39	Comfort CAN High
40	Front Passenger Door Handle Switch Power Supply
41	Front Passenger Door Handle Switch Ground
42	Driver Door Handle Switch Ground
43	Driver Door Handle Switch Power Supply
44	Right Rear Window Down Switch Signal
45	Right Rear Window Up Switch Signal
46	Left Rear Window Up Switch Signal
47	Front Passenger Window Automatic Switch Signal
48	Right Rear Door Lock ON Signal
49	Right Front Window Down Switch Signal
50-51	-
52	Comfort CAN Low

End View and Pin Information of BCM Harness Connector BY275

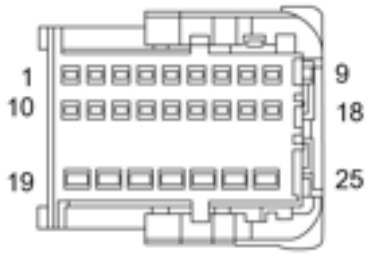

Pin No.	Description
1-2	-
3	Fuel Filler Door Lock Motor Drive +
4	Tailgate Lock Motor
5-7	-
8	LIN4
9-10	-
11	Ground 2
12	Left Brake Lamp
13	Front Side Lamp High Side Drive
14-15	-
16	LIN1
17 - 18	-
19	Ground 6
20 - 25	-

Service Guide

Body Control Module (BCM)

Remove

1. Disconnect the negative battery cable.
2. Remove the driver side lower closure panel.

☞ Instrument Panel Lower Closure Panel Remove

3. Disconnect the harness connector (1) of the BCM.
4. Remove 2 bolts (2) fixing the BCM to the body, and remove the BCM.

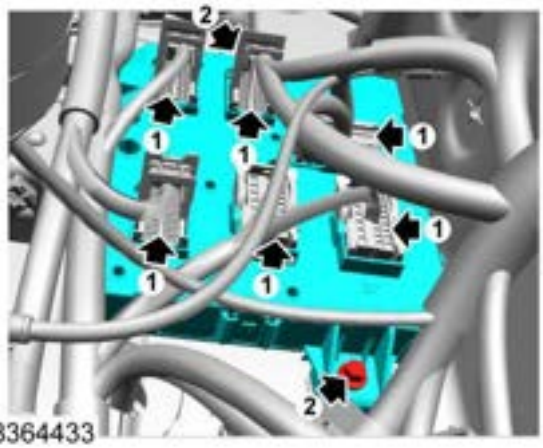

Refit

1. Connect the harness connector of the BCM.
2. Connect the negative battery cable.
3. Programme and encode the BCM.

☞ Body Control Module (BCM)

4. Fix the BCM to the body, fit 2 bolts, tighten them to **5-7Nm** , and check the torque.
5. Fit the driver side lower closure panel.

☞ Instrument Panel Lower Closure Panel Refit

Horn

Specification

Torque

Description	Value
Nut-horo to the front impact bar	7-10N

Description and Operation

System Layout

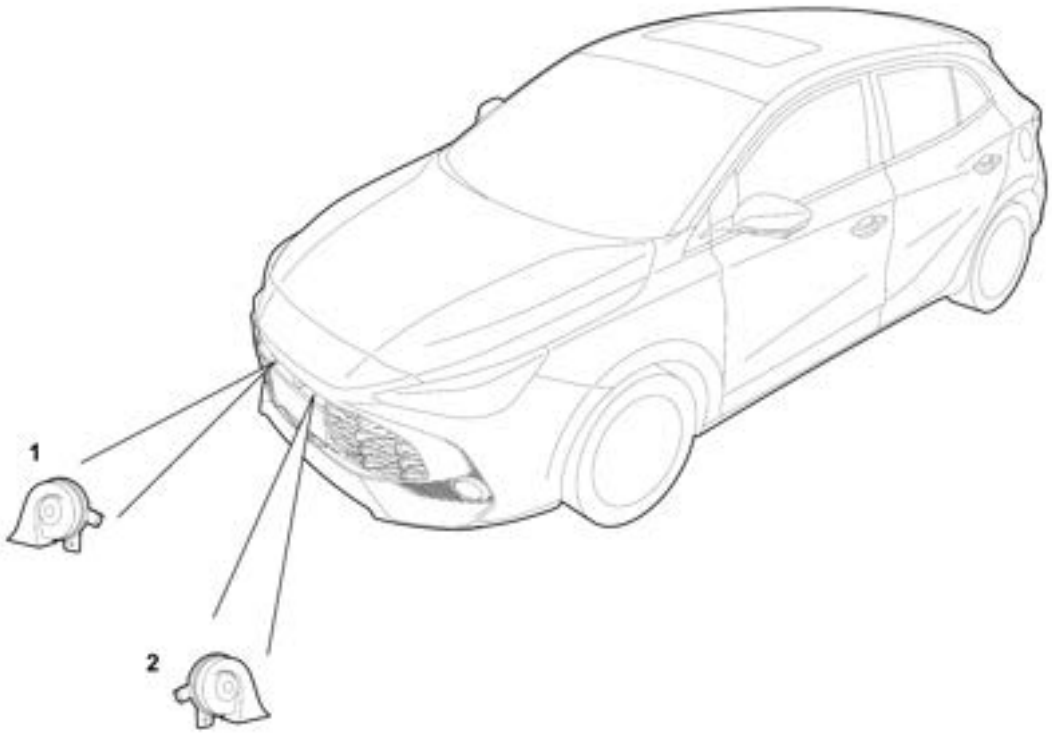

S8611247

1. Tweeter
2. Woofer

System Control Diagram

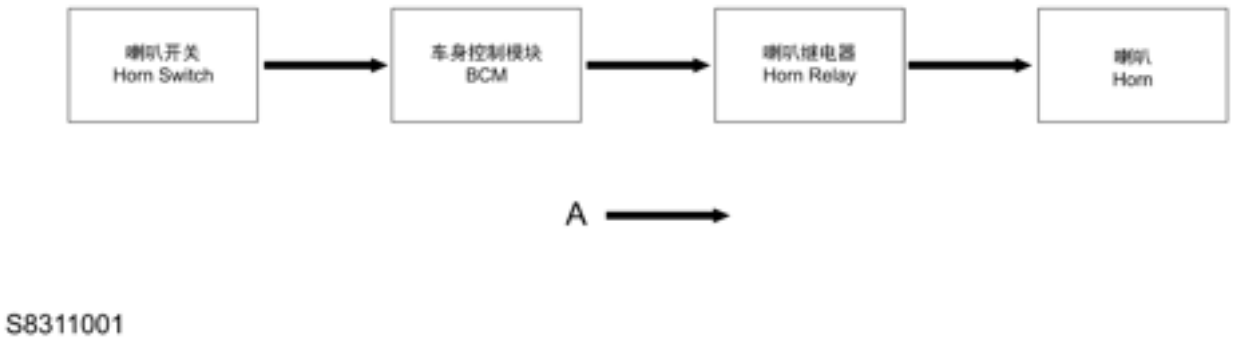

A = Hard Wire

Detailed Information List of Component Pins

End View and Pin Information of Tweeter Harness Connector FC201

Pin No.	Description
1	Power Supply
2	Ground

End View and Pin Information of Woofer Harness Connector FC205

Pin No.	Description
1	Power Supply
2	Ground

Service Guide

Horn

Remove

1. Disconnect the negative battery cable.
2. Remove the front bumper.

☞ **Front Bumper Remove**

3. Disconnect the harness connector (1) of the tweeter/woofer.
4. Remove 2 nuts (2) fixing the tweeter/woofer to the front bumper beam, and remove the tweeter/woofer.

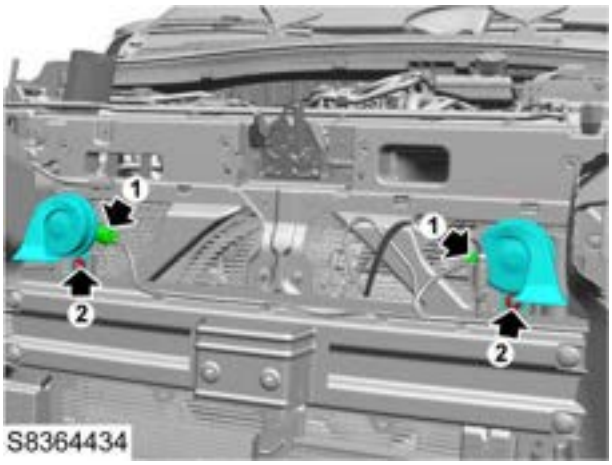

Refit

1. Fix the tweeter/woofer to the front bumper beam, fit 2 nuts, tighten them to **7-10N** , and check the torque.
2. Connect the harness connector of the tweeter/woofer.
3. Fit the front bumper.

☞ **Front Bumper Refit**

4. Connect the negative battery cable.

Serviceable Panels Information

Roof cover plate

Roof cover plate

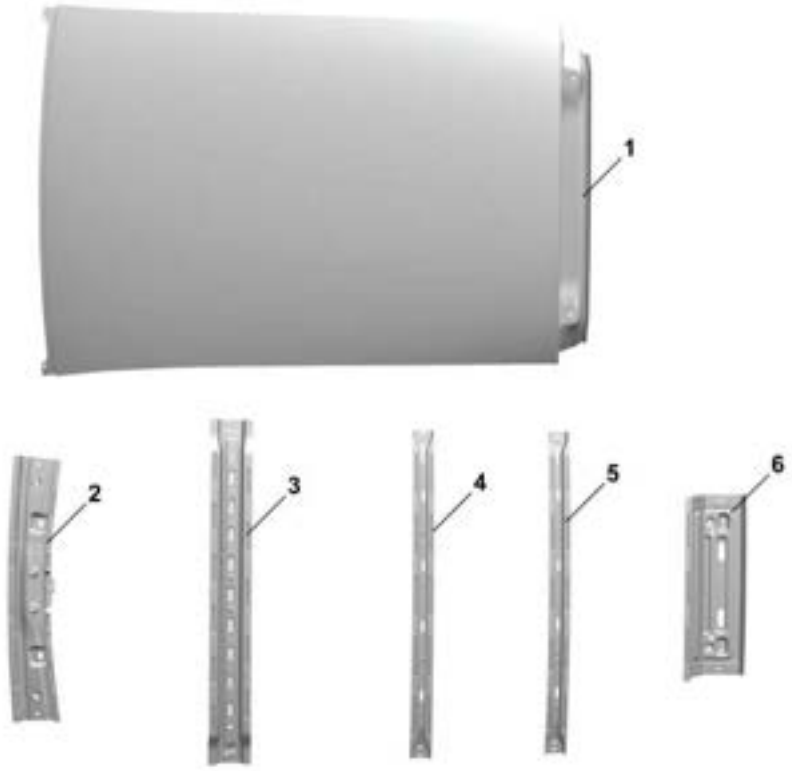

1. Roof cover plate
2. Roof front crossbeam assembly
3. Roof crossbeam
4. Roof crossbeam
5. Roof crossbeam
6. Roof panel rear crossbeam

Small skylight

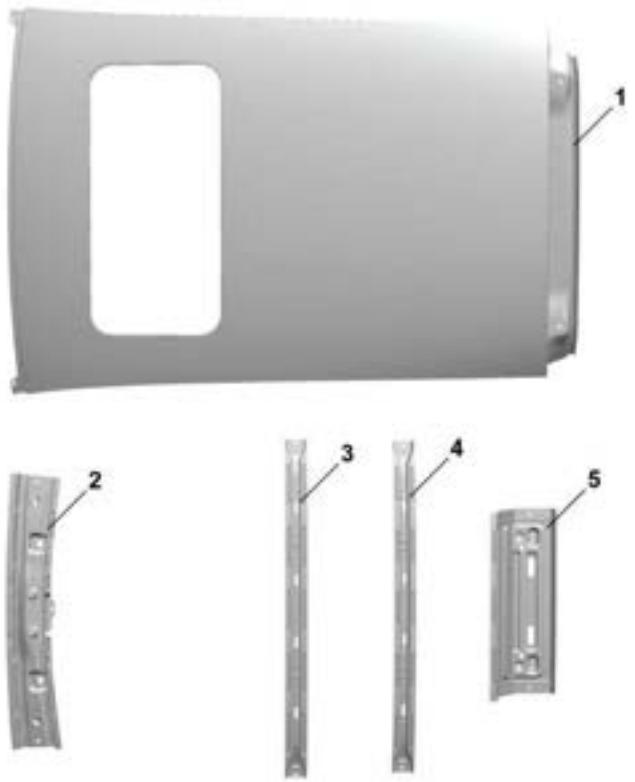

1. Roof cover plate
2. Roof front crossbeam assembly
3. Roof crossbeam
4. Roof crossbeam
5. Roof crossbeam
6. Roof panel rear crossbeam

Engine Compartment Panel

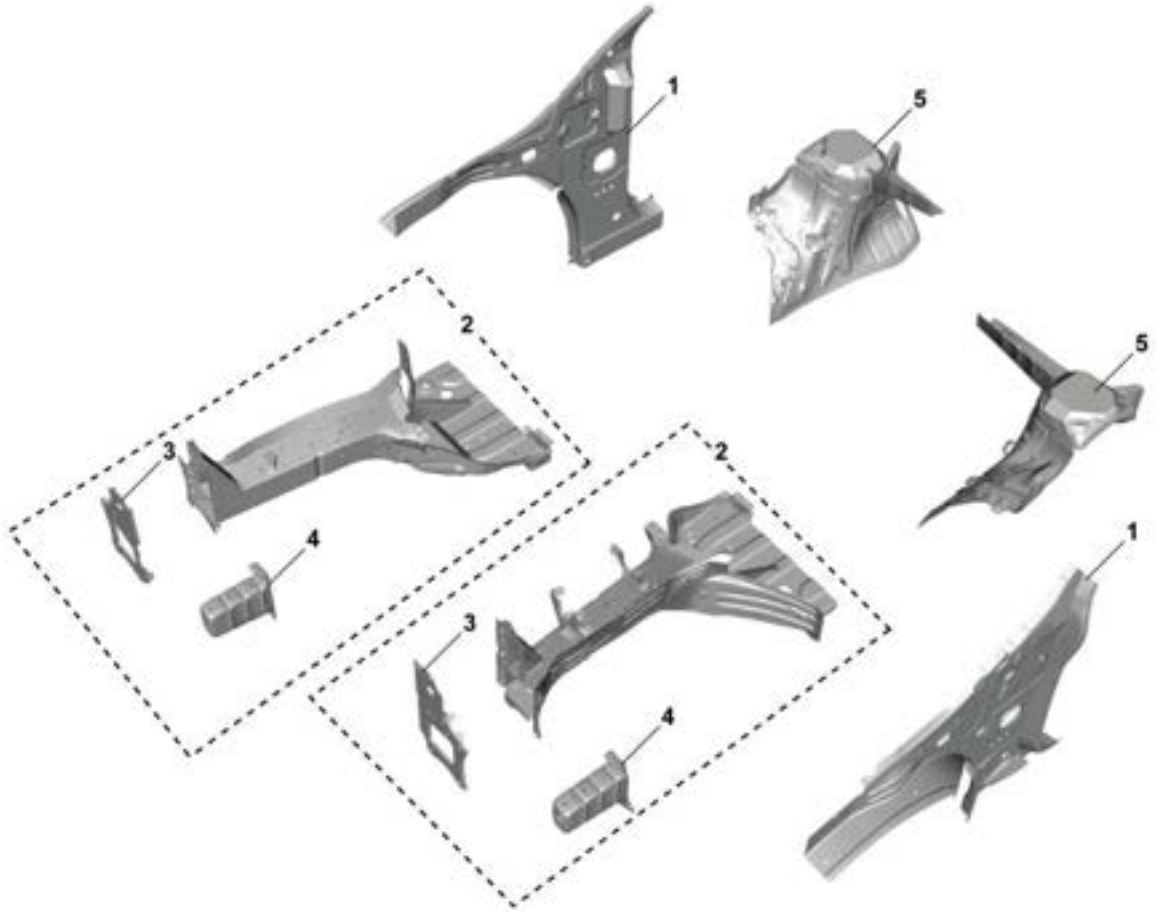

1. A Pillar Inner Panel Assembly
2. Front Longitudinal Beam Assembly
3. Front Longitudinal Beam Front Bumper Bracket
4. Front Longitudinal Beam Crash Box Sub-assembly
5. Front Wheelhouse Assembly

Dash Panel

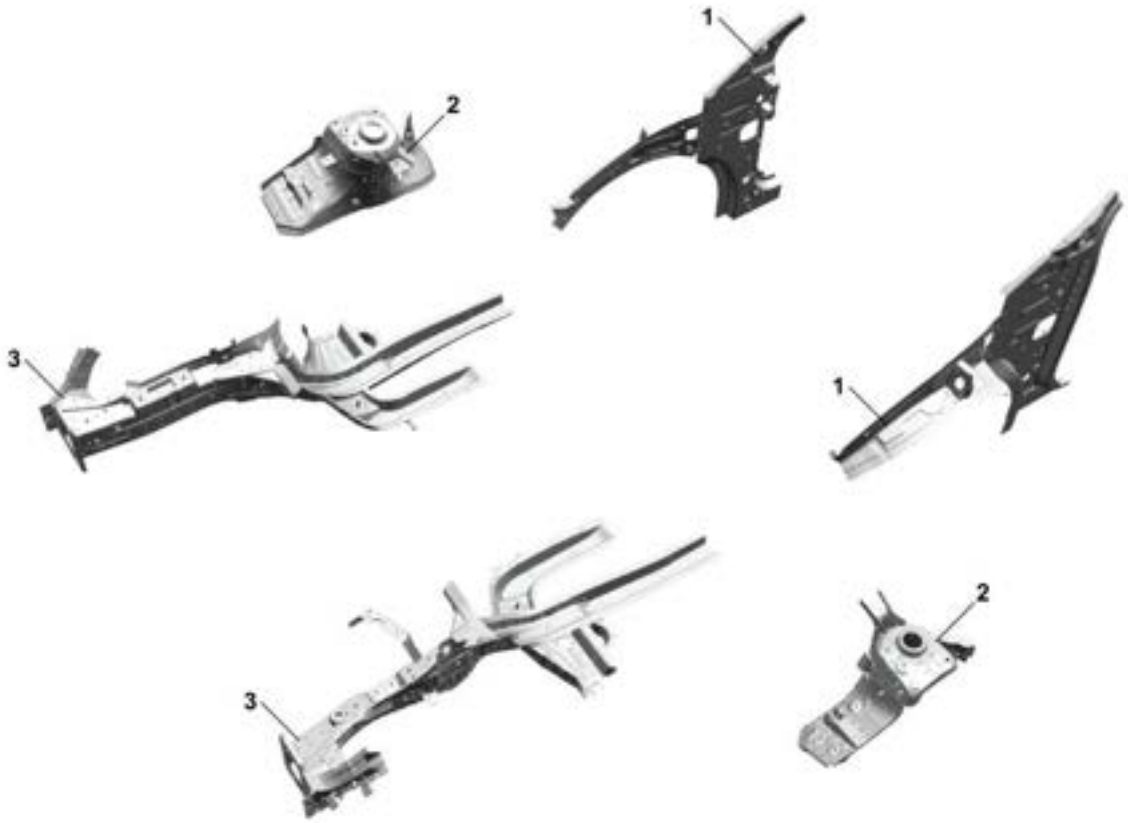

1. A-pillar inner panel assembly
2. Front wheel cover assembly
3. Front longitudinal beam assembly

Bodyside Panel

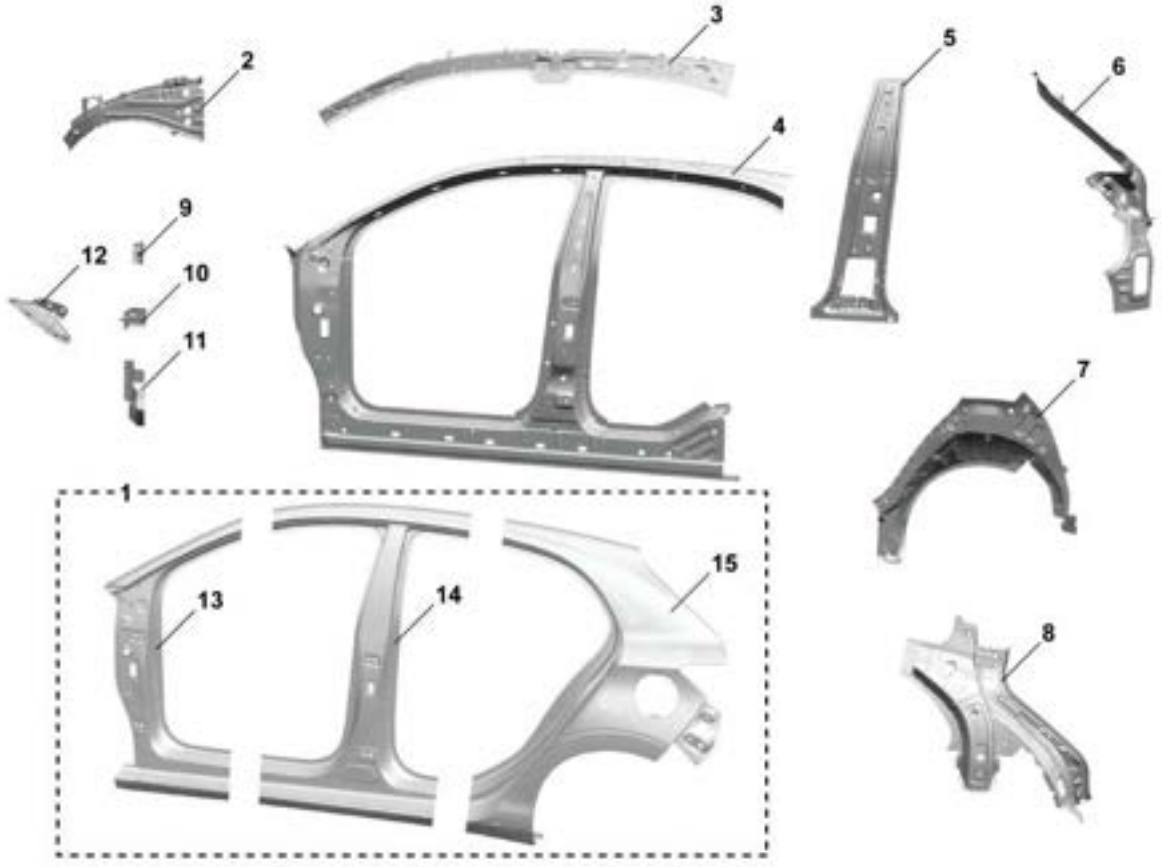

1. Side outer panel
2. Front longitudinal beam outer panel assembly
3. Upper side beam sealing plate assembly
4. Side outer panel reinforcement plate assembly
5. B-pillar inner panel sealing plate assembly
6. Rear taillight mounting plate assembly
7. Rear wheel cover outer panel assembly
8. Rear side panel assembly
9. Front fender rear center bracket assembly
10. Front fender lower bracket assembly
11. Side panel assembly
12. Front fender front lower bracket assembly
13. Front part of side outer panel
14. Middle part of side outer panel
15. Rear part of side outer panel

Front Floor

1. Front floor assembly
2. Door sill inner panel assembly

Rear Floor

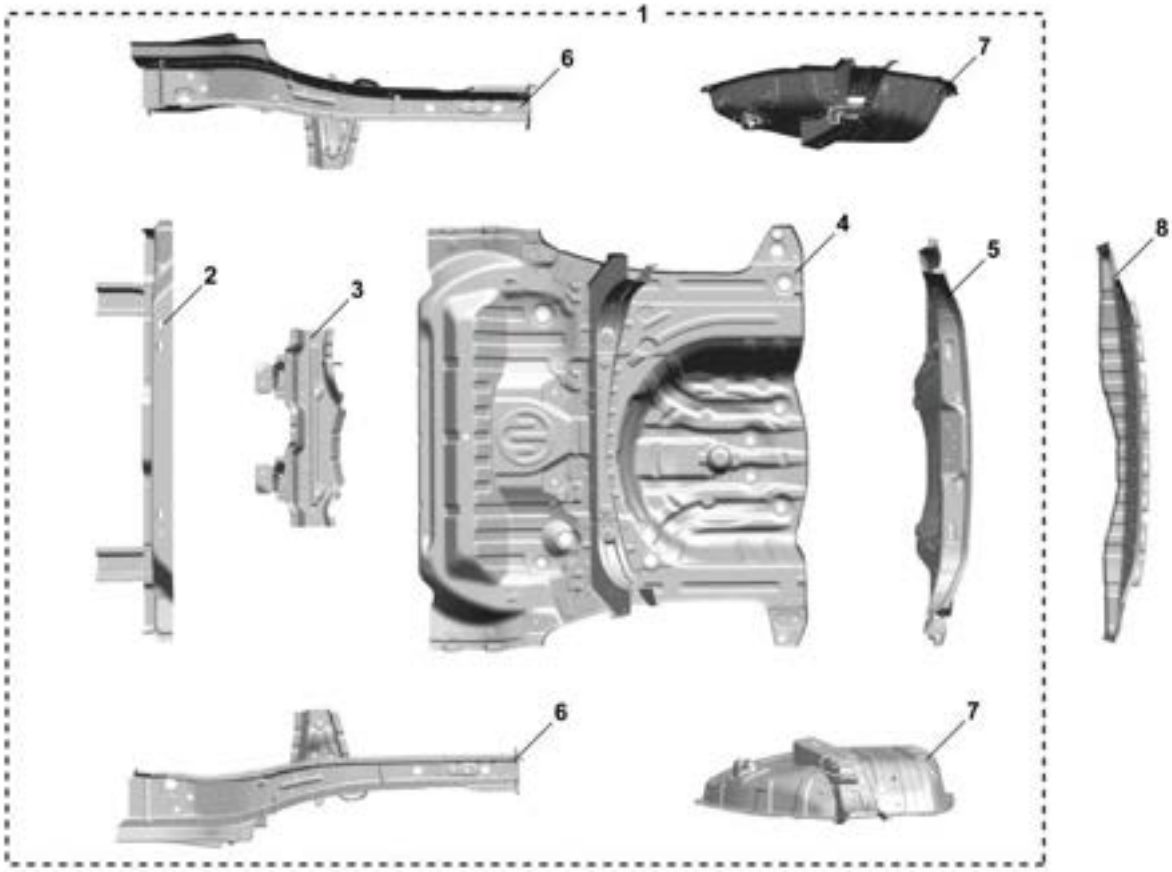

1. Rear floor assembly
2. Heel plate crossbeam assembly
3. Rear floor lower crossbeam assembly
4. Rear Floor Sub Assembly
5. Rear panel assembly
6. Rear longitudinal beam assembly
7. Rear wheel cover inner panel assembly
8. Rear panel assembly

Door Panel Assembly

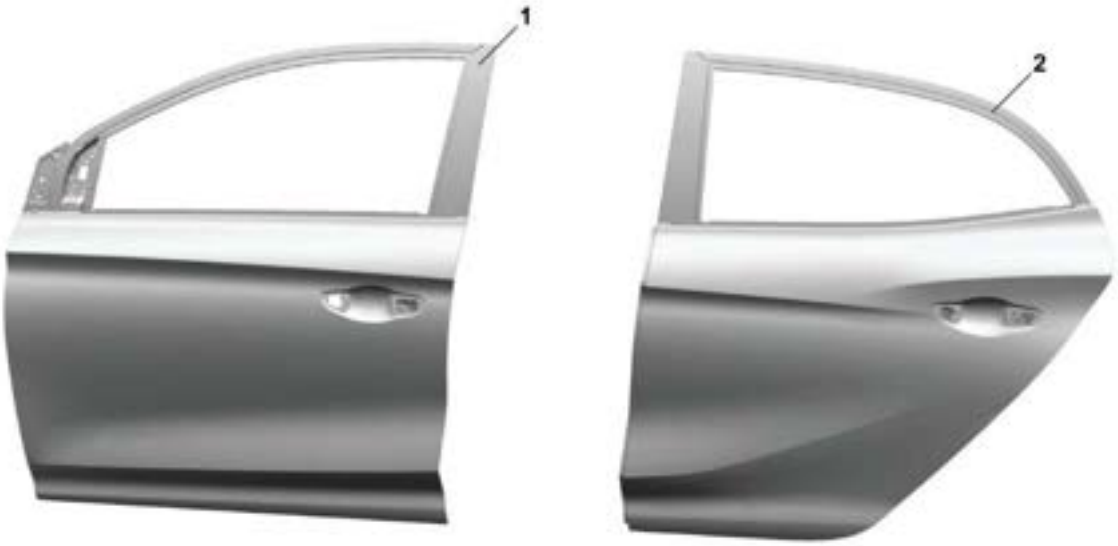

1. Front door assembly
2. Rear door assembly

Bonnet Panel Assembly

1. Engine hood sheet metal assembly

Tailgate Panel Assembly

1. Tailgate assembly

Collision Repair

Body Material

For different strength requirements of different body parts, this model adopts various high strength steel plates and ultra high strength steel plates (hot formed steel plate). The detailed positions of different materials are as follows:

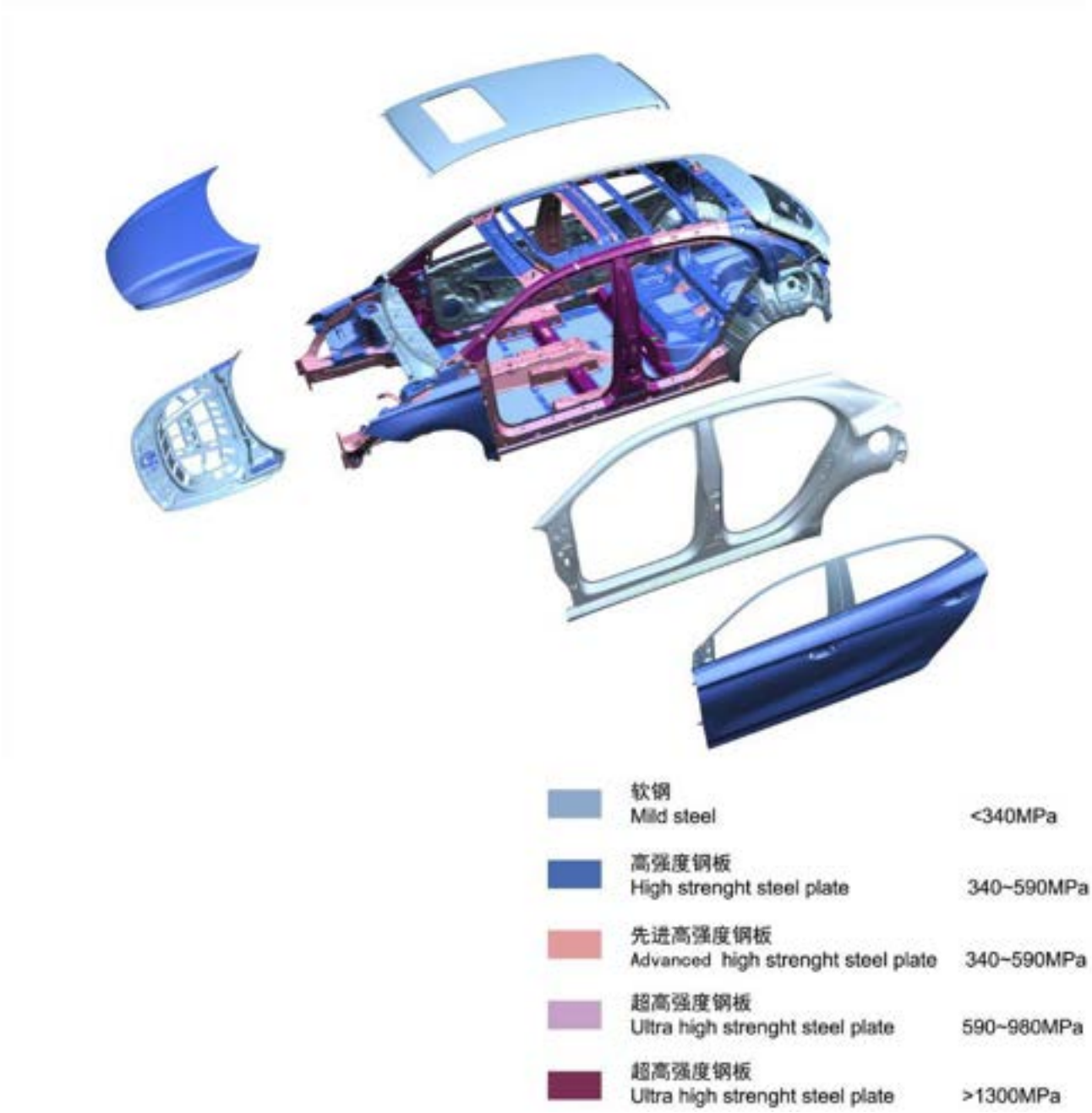

Only services as per relevant instructions in the Manufacturer's Service Manual and services of high strength steel plates and hot formed steel plates as per the modern inverter technology are allowed.

During the service of the galvanized steel plate, the following matters should be noted:

- The paint and zinc coating should be completely ground off before grinding. Be careful when grinding.
- Apply the spot welding paint between the weld contact surfaces before the spot welding (with a hairbrush or a spray).
- Particles on the surfaces will be absorbed by the electrode, so it is necessary to clean the electrode tip frequently.

Damage Diagnosis

Damage detection

During the damage detection, it is required to visually estimate the collided position, determine the collision direction and magnitude of collision force, and check the possible damage. For the vehicle damaged in an accident, it is required to ask about the speed at the moment when the accident takes place, and the position, direction and angle to the crash or rollover to grasp the impact form, position, angle, etc of the collided vehicle and intuitively determine the position damaged by the collision and the area that may be affected. A comprehensive inspection can also be conducted to the vehicle in combination with test drive and measuring equipment to confirm whether the underbody is deformed, whether the body suffers from overall damage and overall skew, whether the door can be opened smoothly, etc to determine the extent of damage and repair method.

1. Visual inspection to the vehicle

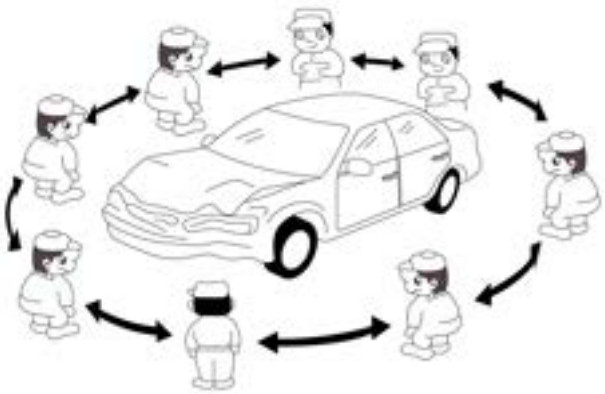

2. Visual inspection to the specific position

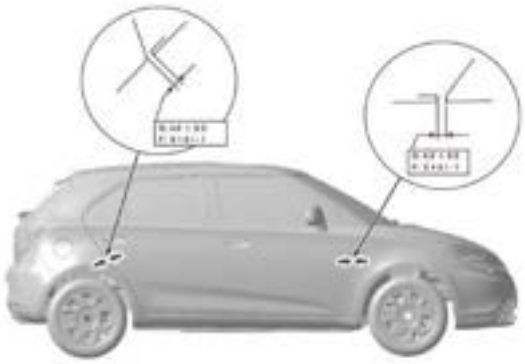

Identify all damaged positions

After a vehicle is collided, beyond the deformation damage from the collided position, its entire body, including frame, suspension, engine and other parts, may also be deformed. During the detection, it is required to check all damages of the related parts along the collided route system till there has been no trace of damage and those to the surrounding area.

Characteristics of body damage:

- Characteristics of front collision damage

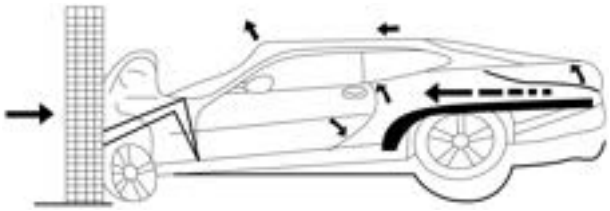

- Characteristics of middle collision damage

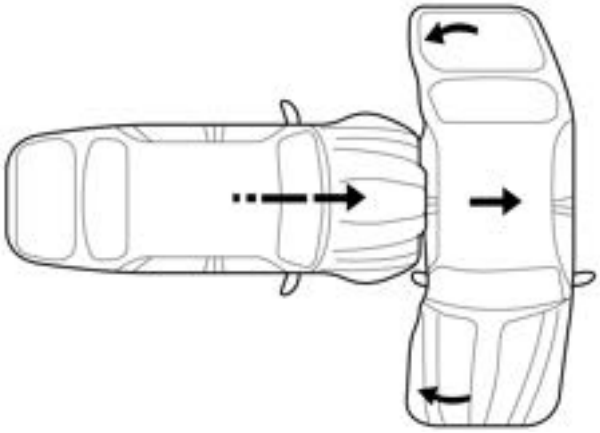

- Characteristics of rear collision damage

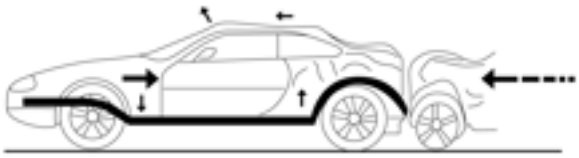

Measurement of the damaged position

Accurate measurement is one of the procedures required to successfully perform a variety of collision repairs. For the integral body, the measurement is even more important for successful damage repair, because most of the steering and suspension systems are fitted on the vehicle body while some suspension systems are designed according to the assembly requirements. To guarantee the correct steering and driving operation performance of the vehicle, the fit tolerance of the key processing dimensions should be controlled within the allowed range.

The measurement work should be carried out in conjunction with the disassembly work, or it will be unable to accurately identify all the damages. To facilitate the body maintenance and thorough damage inspection while avoid unnecessary damage caused by the maintenance to the disassembled parts, it is required to disassemble the related parts. The disassembly should follow the principle to minimize damage and destruction of the parts.

Selection of measuring point:

- Screw hole and process hole for parts installation;
- Lap point of body steel plates;

- Machining gap or bulge & depression on steel plate.

Measuring methods:

- Distance measuring method: it is the simplest and most practical measuring method employing a steel tape to measure the distance from each component to the datum point.

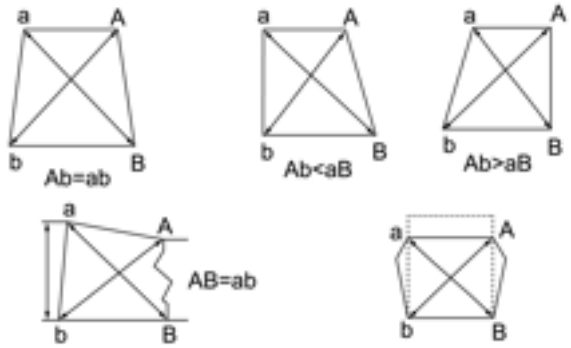

- Centering gauge method: measure with the centering gauge.
- Three-dimensional coordinate measuring method: measure the three-dimensional coordinate data of the selected measuring point, and then compare them with the original vehicle data to determine the body damage.
- Electronic measuring: more accurate and more effective.

Main reasons accounting for the measuring error of body size:

- The error caused by accuracy of the measuring tool or equipment itself;
- The error caused by human factors:
  - Failure to accurately locate position of the measuring point;
  - Failure to select a correct measuring method;
  - Failure to use the measuring tool and equipment in a correct manner.

Precautions for measurement:

- Adjust the body to the horizontal position before the measurement;
- Mark measuring points on the body to prevent messing up the points during the measurement;
- Conduct the measurement in an accurate manner;
- Repeat the measurement for several times;
- Verify all measuring results repeatedly.

Confirmation of Maintenance Scheme

Underbody correction

When the car is severely damaged, involving deformation of the underbody, there is no need to replace the body and it is required to conduct underbody correction in the first place. Completion of the underbody correction can guarantee three-dimensional position of the underbody and overall position of the body, determine placement position of the engine assembly and front suspension, and restore positioning angle of the wheel and positioning of other assemblies. The body panel repair should be carried out after completion of the underbody correction.

Correction of body and its covering part

When the body and its covering part only suffer from repairable depressed deformation and minor damage in a collision, there will be no need for part replacement while it is required to adopt a correction method to restore their original shapes.

Panel replacement

For a certain position of the body or a part suffering from multiple breakages, when the damage/corrosion has reached a certain degree, making the repair meaningless or the required technical standards and functional requirements unable to be reached after repair, the damaged panel should be replaced.

Body replacement

When it is determined as that the body is irreparable, because the car is seriously damaged, making the entire body almost smashed up, the underbody severely deformed, and the two sides, roof, bonnet, and trunk lid almost completely destroyed, the vehicle body can be replaced as required by the user. Remove all serviceable assemblies and parts from the damaged car, and then conduct thorough check and repair to the principal assemblies of engine, etc. Replace the body assembly with a new one and all the parts requiring substitution, and then conduct re-assembly in accordance with the vehicle assembly process.

Partial replacement of body

When the vehicle is partially damaged in a collision, for example, when the front/rear fender, door, bonnet, or trunk lid is damaged, partial replacement can be employed to the body to achieve the purposes of trouble saving, time saving, and cost saving.

Replacement of body pillar

When the body pillar, front windscreen pillar, or front/rear wall pillar is beyond repair after being seriously damaged, it can only be replaced. Only after the deformation of a large area is restored can a regular pillar of the same shape can be fitted as a substitute.

Body Correction

Body correction is to eliminate the deformation (plastic deformation) and residual stress caused by vehicle collision so as to restore the correct location and size of the panel.

Introduction to correction equipment

The correction equipment should have the following characteristics:

- High-strength body positioning and fixing devices.
- Maintenance pullers of multiple shapes and different functions to meet the demands to repair different parts.
- The capacity to carry out multi-point, all-round correction and drawing.
- The capacity to conduct accurate measurement, precisely detect deviation of each datum point, and fix error.

Operating Procedures of Correction Equipment

No matter which kind of equipment is employed, its operation will be roughly divided into the following four steps:

1. Vehicle fixed to the equipment.
2. Positioning and clamping.
3. Drawing.
4. Measuring.

Auxiliary fixation:

- Prevent movement of the body;
- Evenly spread the force generated by drawing;

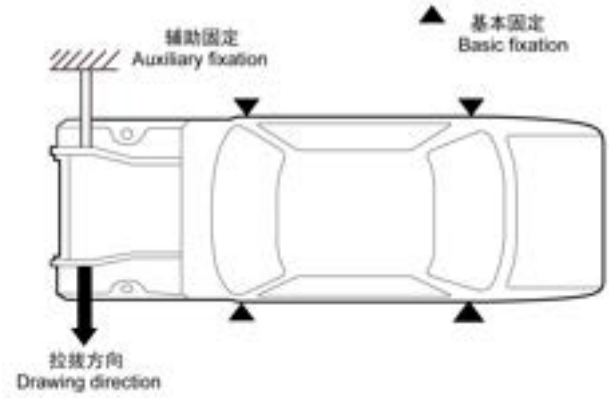

Auxiliary support:

- Prevent drawing-caused secondary damage to the body;
- Concentrate the drawing force on the damaged position to improve efficiency of the drawing;
- Prevent torque from being produced during the drawing;

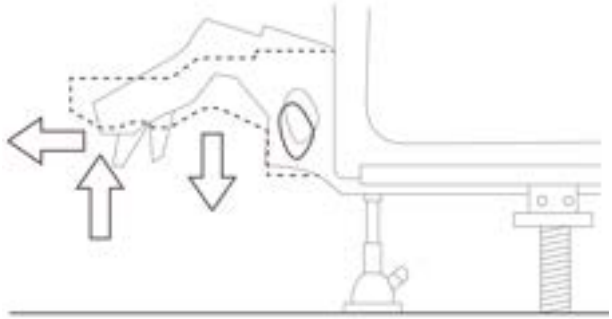

Stretching-based Correction Method

Drawing Sequence

During the stretching, attention should be paid to methods and procedures: for stretching, the stretching amplitude of each time should be modest, and then release the chain for force unloading and measuring. The operation should be completed according to the sequence "from the inside out".

1. Firstly, it is the length. Conduct stretching to longitudinal direction along the center line of the car.
2. And then, it is the width correction. Conduct correction to lateral direction of the car.
3. Finally, it is the height correction.

Stress Relief

During the drawing, attention should be paid to stress relief:

- Beat the raised position and its back at the side of the deformed area;
- Beat the welded position of the deformed area;
- Beat the ridge line of the deformed area;
- Beat the reinforcement plate of the deformed area;

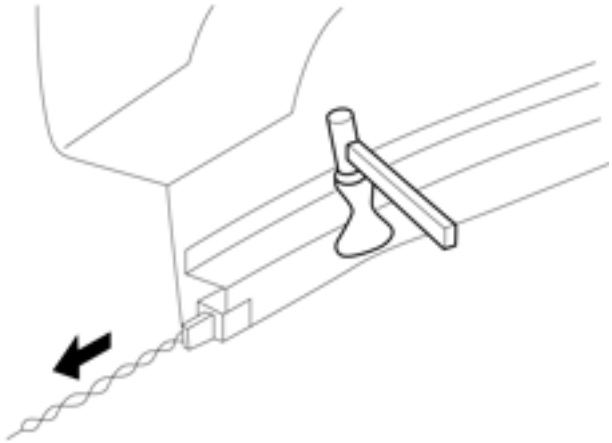

When being heated, the high-strength integral body will become very sensitive; therefore, generally, do not try to complete the stretching for correction in one step. Generally, the process of stretching – balance keeping – a second stretching – a second balance keeping should be followed and repeated. When a car body gets folded tightly after being collided, if the metal undergoes the risk of being damaged, it need be heated. For heating, it should be noted that only the ridge line or the two-layered plate that gets connected too tight can be heated. Heating can only be used as a means to

relieve metal stress, rather than a method to soften a certain position.

Caution :

Impose tensile force on the pre-determined position to restore slowly and carefully the damaged steel plate to its original size and shape; when stress of the bending steel plate is completely eliminated, accurate body repair can be achieved.

Caution :

Panel Shaping

Panel shaping methods

Ring-pulling method for panel repair (meson machine)

As a panel repair method introduced in recent years, the so-called ring-pulling traction repair method involves a certain number of flat-washer-based rings welded based on size of the damaged panel; the rings act as the traction medium; penetrate the wire rope into the medium, and then use manpower or machine to pull the wire rope to make the damaged panel drawn outwards via the medium to its original position and shape; the ring-pull traction repair method is more flexible especially for the deformation with a large area, double-layered panel, position not easy to be approached, corner transition, door column, etc.

Heating shrinkage method

The local heating shrinkage method is a common method for panel repair. The deformation of panel is mainly caused by tensile deformation of the related position; with the heating shrinkage method employed, the tensile stress can be eliminated to make the panel restored its original shape.

Repair method by hammer and jacking block

The repair method by hammer and jacking block is a traditional method for panel repair. Holding hammer in one hand and jacking block or other tools in the other, the sheet-metal worker will beat the panel for shaping repair. Manual operation for panel requires skill and experience of the sheet-metal worker while superb panel repair skill cannot be acquired overnight; the panel repair mainly involves shaping for deformed surface and contour correction.

Technical requirements for panel shaping

No matter which kind of repair method is employed to repair the body surface, the specified technical requirements should be met to restore the original performance and surface appearance quality of the vehicle.

Restoration of appearance

In the repair, both the smooth structure of a large area and the wedge-shaped structure at the local transitional position should be restored to their original shapes. The original shape can be appropriately tuned when it cannot be 100% restored; however, the appearance should be symmetrically beautiful and durable.

Integrity and refinement of continuous surface

Most of the car body is mass-produced by die stamping, the surface of which thus is featured by integrity and refinement. In the repair, for streamlined surface, continuous transition should be made; for surface turning point, smooth transition should be made; after being repaired, the outer surface should be as bright as new with no ripple, wrinkle, dent, beat-caused mark, scratch or obvious flaw visible to the naked eye or perceivable by hand touch. Integrity, stream linearity, continuity and refinement of the continuous surface should be guaranteed especially for large-area repair.

Sufficient strength and stiffness

The original design gives sufficient strength and stiffness to the body; therefore, after being repaired, the body should not lose its strength and stiffness. Vibration noise of the body after being repaired should be controlled within the allowed range; no abnormal sound caused by vibration is accepted. It is required to ensure that the body will not suffer from fatigue damage in a certain driving range; the entire body should have a certain degree of stiffness to ensure that the body panel in use will have the capacity to maintain its original shape.

Panels Replacement

Panels replacement mainly involves the following process:

1. Preparations before cutting of damaged and new panels.
2. Damaged panels removal.
3. Alignment and cutting of new panels.
4. Pre-weld treatment and corrosion protection.
5. Final alignment and weld of panels.
6. Post-weld treatment.
7. Accessories refit and inspection after completion.

Principles of Panels Replacement

Thin Panels Replacement

Replacement of thin panels should follow the beauty-oriented principle and observe the following requirements:

1. As for the section more than 15mm away from any foam part, the shortest position should be selected for cutting to avoid welding-caused foam damage;
2. For replacement of the A pillar and rear fender, it is suggested to remove the windscreen;
3. It is not allowed to cut any position with built-in reinforcement.

Thick Panels Replacement

Replacement of thick panels should follow the strength-oriented principle and observe the following requirements:

1. It is not allowed to cut the position where the energy absorption area is located.
2. It is not allowed to cut the area less than 50mm away from the position in front/back of the laser welding;
3. As for the section more than 15mm away from any foam part, the shortest position should be selected for cutting to avoid welding-caused foam damage;
4. It is not allowed to cut any position with built-in reinforcement;
5. That size of the cutting seam should be equal to thickness of the panel is to guarantee welding penetration.

Preparations before Cutting of Damaged and New Panels

1. Use a hot-air gun to remove all the residual sealants to reduce the heat-generated toxic fumes during welding.
2. Straighten the existing panel's seam edge with form block and hammer.

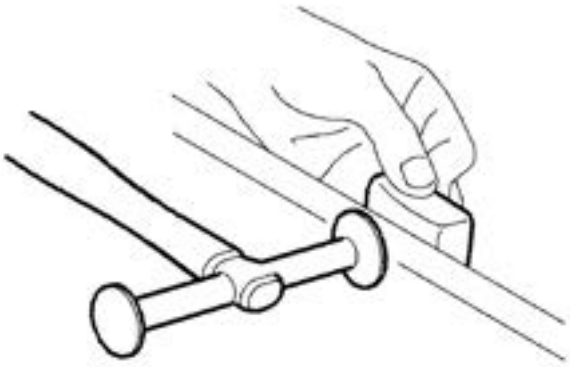

S883036

3. Mark the actual cutting position (with 15mm reserved for pasting paper self-adhesive tape) on the body's damaged part and all the positions with welding spot to be removed. (Link to OEM welding information)

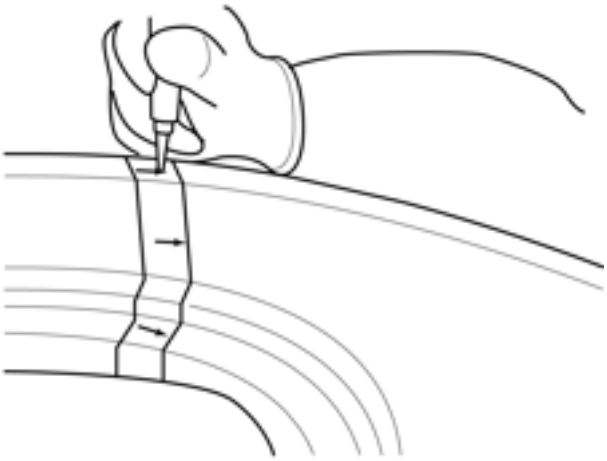

4. Mark the actual cutting position on the body's new part and paste the paper self-adhesive tape.

Damaged Panels Remove

1. Apply positioning punch to the welding spot.
2. Abrade the welding spot.

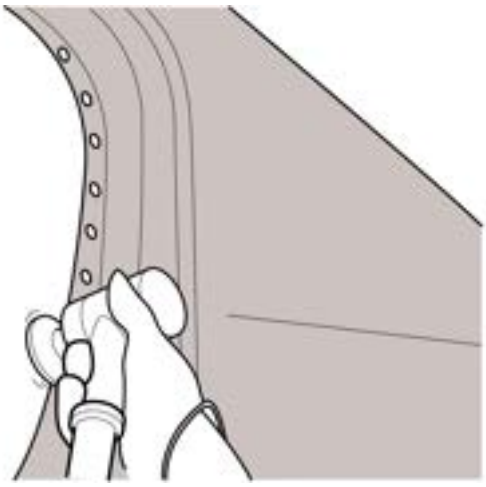

3. Conduct rough cutting and shave the welding spot.

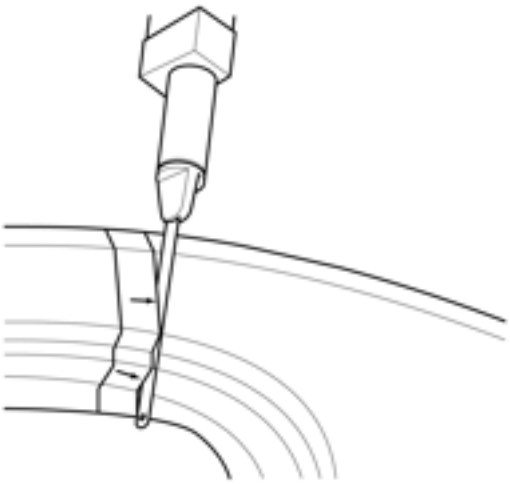

4. Remove the damaged panel.

Alignment and Cutting of New Panels

1. Locate the new panel to the body and adjust the position size.

- Compare the space;

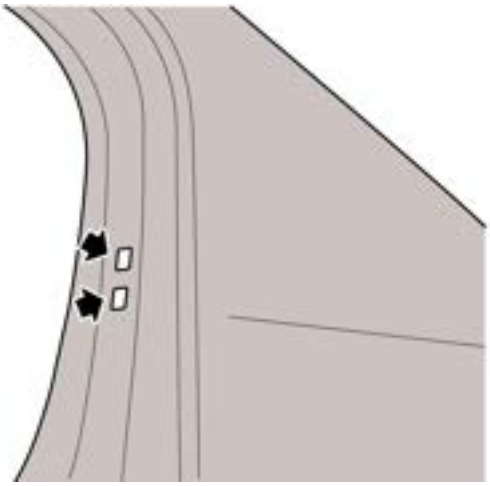

- Adjust the clearance;

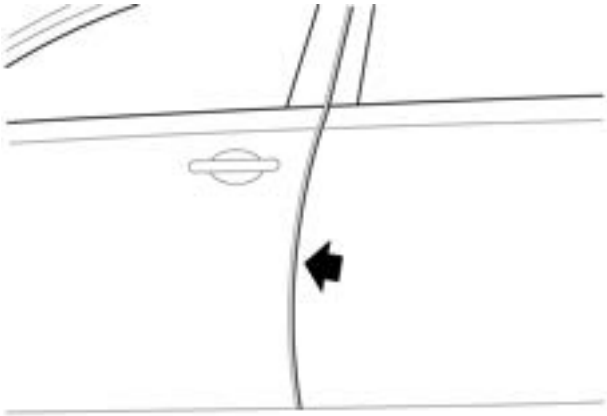

- Adjust the difference between high and low surfaces;

2. Cut the overlap of the damaged and new panels; during the cutting, do not cut any reinforcement built in the body; cut off the extra damaged panel by segmentation after the new panel is taken off.
3. Mark the hole punching position for plug welding.

Pre-weld Treatment and Corrosion Protection

1. New body panels: abrade all positions welded and glued to remove the paint layer.
2. Abrade all positions welded and glued to remove the old coating, burr, and rusty spot (paint removal at the position 20mm away from the welding port) while do not polish the abutting port's cross section.

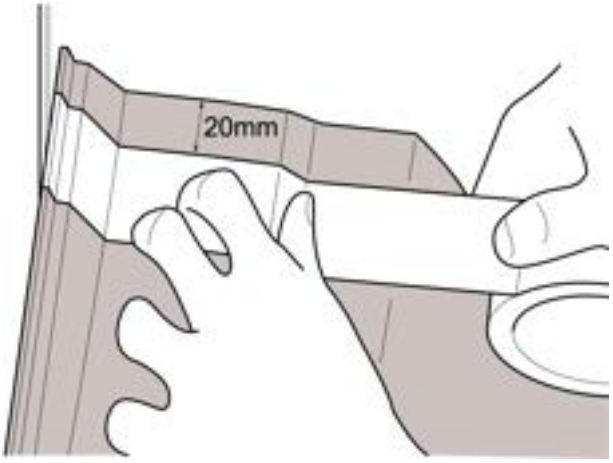

3. Clean the new panel and all positions to be welded and glued on the body; and then leave them alone for 5-10 minutes for volatilization of the cleaning agent.
4. Apply zinc spray to the new panel and all welding junction surfaces with no need to be glued, and control thickness of the zinc spray.
5. Applying of structural adhesive: before the structural adhesive is applied, it is required to tap out and discard the 10cm of glue to ensure that the panel will be glued evenly. The welding should be completed within the operating time as prescribed by the structural adhesive, or the gluing effect of the panel will be affected.

Final Alignment and Weld of Panels

Panels Refit and Adjustment

1. Determine the ridge line position;

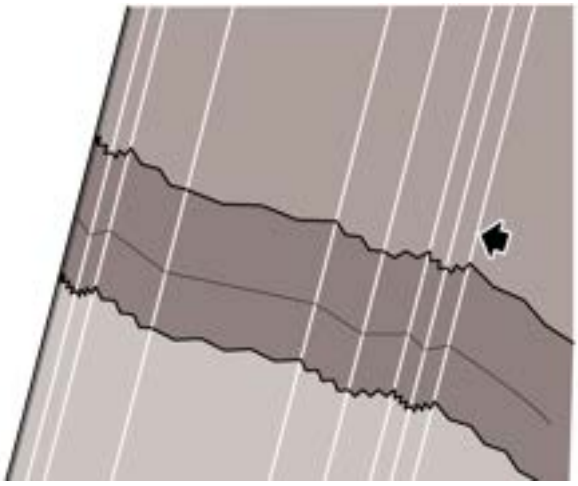

2. Compare the space;

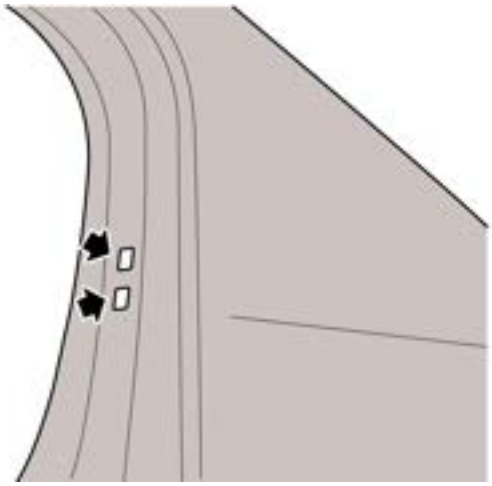

3. Adjust the peripheral clearance;

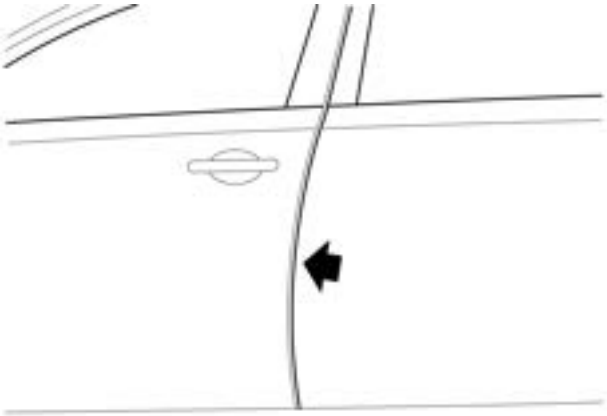

4. Adjust the difference between high and low surfaces.

Positioning for Gas Shielded Welding

1. The selected gas ratio is 80% argon and 20% CO2.
2. To guarantee the accuracy of positioning, it is not advisable to conduct positioning welding on the ridge line position; position of the positioning welding should fall on both sides of the corner angle; meanwhile, it is required to control spacing of the positioning welding above 30mm.

Trial Welding before Spot Welding

1. Select the welding arm for resistance spot welding and use the welding nozzle finisher to shape the electrode tip. Trim the welding nozzle to make its diameter equivalent to 2 times plus 3.0mm of the thickness of the metal to be welded.

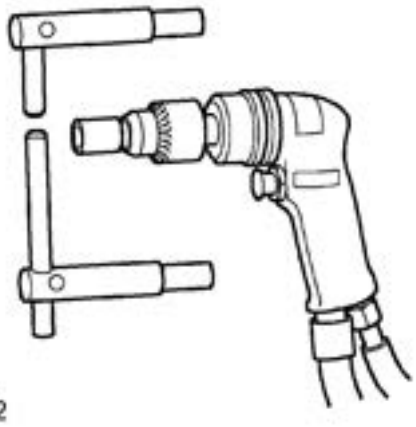

Caution : Use welding arms not exceeding 300 mm in length.

2. Use test silicon wafer and fit resistance spot welding arms and test equipment to satisfy the operational requirements. If there is no monitoring device, the welding strength can be tested by checking welding pool pull wires around the metal under tensile force during the stretch.

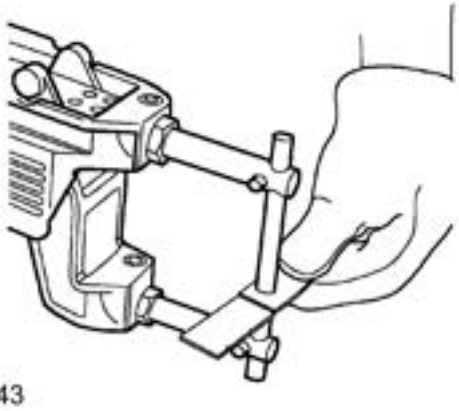

Welding Sequence

- Welding sequence: to reduce the decline of weld strength caused by welding shunt, it is suggested to start welding from double-sided spot welding according to the sequence as shown in the figure below; spacing of the welding spots is 25mm.

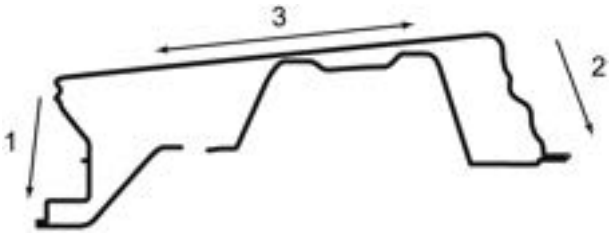

Welding Requirements

- Provided that the resistance spot welding has been used during the production, it is required to conduct another resistance spot welding in other possible positions. To conduct spot welding, it is suggested to fabricate the test silicon wafer of the same metal gauge and material to perform the peeling test, thus ensuring the weld quality

will be qualified. If conditions permit, the weld quality monitoring machine can be employed to guarantee the weld quality. When the desired spot welding cannot be achieved, it is required to resort to plug welding.

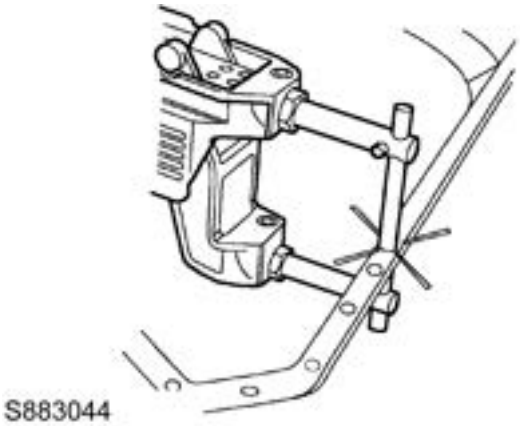

- Length of the welding electrode hold for hand-held spot welding gun should not exceed 300mm.
- It is prohibited to conduct single-sided spot welding;
- Unless otherwise specified in the production, It is prohibited to conduct braze welding and gas welding.
- Gas shielded welding - plug welding: to weld the area of the third and above layer, or when the nozzle approaches the restricted area, if the resistance spot welding cannot be applied, metal active-gas plug welding can be employed instead through the hole left by the cutting machine for spot welding or the hole punched/drilled dedicatedly. Diameter of the welding hole for plug welding of the structural part is 8mm and that of the covering part is 5mm; number of the welding spots for plug welding is equal to that of the original manufacturer.

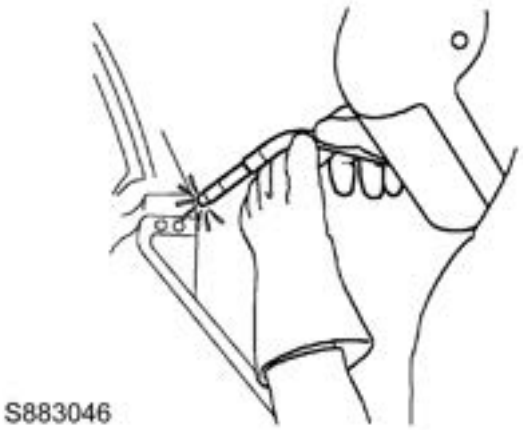

- Gas shielded welding - butt welding.

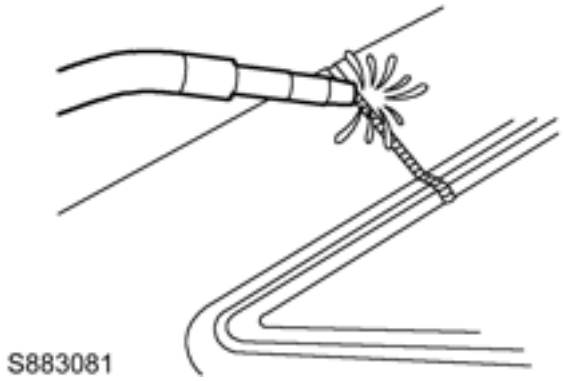

Post-weld Treatment

Corrosion Protection Process

1. Use P36 sand disc grinder or belt grinder to finish all welding and clean all welding positions.

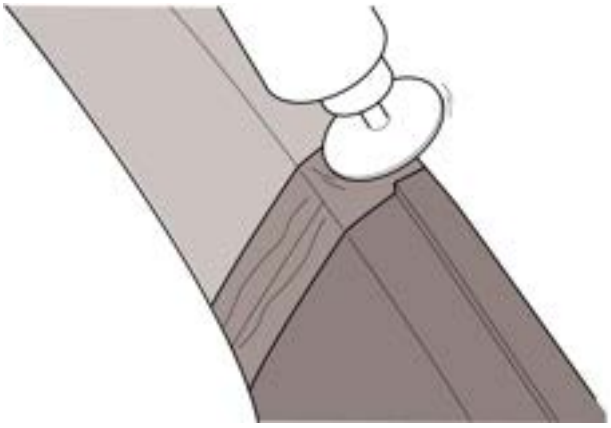

2. Apply anti-rust primer, which can not only prevent rust, but also make the sealant better attached.
3. Apply sealant to fill the gap between the panels, thus reaching the purposes of gap filling and prevention against water leakage. (Link to information of sealant positions)
4. Hand over the vehicle to the painter for paint spraying.
5. Before the accessories are refitted, apply anti-corrosion wax to the cavity. (Link to application information of cavity protection wax)

Paint

Overview

The purpose of automotive painting is to provide an excellent appearance, decoration, gloss protection, color protection, corrosion resistance and a longer service life, so it has distinctive features:

- Automotive painting is a high-level protective painting, and the coating shall have a superb corrosion resistance, weather resistance, acid/alkali resistance, inclusion resistance and an extensive adaptability.
- Automotive painting (mainly refers to body painting) is a high-level decorative painting, and careful design, good working environment and conditions are required for providing the coating with good decoration. Vehicle decoration mainly relies on painting, and the quality of the painting has a direct influence on the commercial value of the vehicle.
- Automotive painting is the most typical industrial painting, and it requires reasonable and effective pretreatment method, drying method and process preparation.
- Automotive painting is a multi-coating painting system, and the painting quality and process control of each coating is of great importance.

Coating Introduction

Coating Composition

During manufacture, paint application consists of the corrosion resistant coating (zinc coating) of the raw material, zinc phosphate coating, electrocoating, intermediate coating and top coat.

Aftermarket paint repair is composed of the primer coat, putty coat, intermediate coating, pigmented paint coating and varnish coating.

Function of Each Coating

1. Zinc Coating: it possesses a good function of anti-corrosion/anti-rust, good paint adhesion, decorative performance and forming property.
2. Zinc Phosphate Coating: it is the first paint that is directly applied to the treated workpiece surface and is the base for the whole coating. Its characteristics are as follows:
   - It shall have a good adhesion to the treated surface of the workpiece, and the primer film formed shall have an excellent mechanical strength;
   - It shall serve as a corrosion inhibitor, and the primer coating shall have an excellent corrosion resistance, water resistance and chemical resistance;
   - It shall well fit the intermediate coating or top coat;
   - It shall have a good workability.
3. Electrocoating: it enhances cavity corrosion resistance; improves the uniformity and leveling of the paint film thickness; raises the quality of the paint film, painting efficiency and paint utilization efficiency.
4. Putty Coat: it is used for the object surface with primer precoat so as to fill the pit, weld seam, scratch, rust hole, etc. on the object surface, until the surface becomes smooth.
5. Intermediate Coating: it is the last intermediate coat before applying the top coat, its binder content is between the primer and the top coat, and the paint film is bright and semi-bright. It provides the following functions:
   - Enhance the adhesion between the primer and the top coat;
   - Increase the total thickness of the coating and improve the film build;
   - Improve the corrosion resistance and weather resistance of the primer/top coat;
   - Repair minor defects on the substrate surface;
   - Raise the decoration performance of the top coat.
6. Top Coat: top coat is used for the final coating of the multi-coatings; it directly affects the decoration performance, weather resistance, gloss protection, color protection, chemical resistance, contaminant resistance and appearance of the vehicle.

Classification of Top Coat

The classification of the top coat by color effect is as follows:

- Pure pigmented paint: consists of resin, pigment and additive only.
- Metallic paint: tinted coat with metal powder provides better gloss and richness.

- Pearl paint: compared with metal coat, pearl paint replaces metal powder with mica powder containing TiO_2 and FeO_2, improving the film texture and gloss.

By application procedure, the top coat can be classified into the following processes:

- Single-process: a system that uses one type of paint to form a complete surface coating. Single-process pure pigmented paint and metallic paint are included.
- Double-process: a system that uses two different types of paints to form a complete surface coating, generally, the pigmented paint is applied before the finishing varnish is painted. Double-process pure pigmented paint, metallic paint and pearl paint are included.
- Three-process: usually, a layer of primer is required for this system, then a layer of pearl paint, and finally a layer of finishing varnish; the combination of these three coatings forms a complete surface coating. Three-process pearl paint and tinted varnish are included.

Principles of Paint Repairs

The following principles must be adhered to for paint repair operations:

1. Seal required exterior and interior seams with an approved seam sealer.
2. Repair any damage to underbody sealers.
3. Apply a two-pack paint refinishing system. This meets with original build integrity.
4. Apply cavity wax to all interior surfaces which have not received refinish paint.
5. Before carrying out paintwork repairs, clean the vehicle thoroughly using either a steam cleaner or high-pressure washer.
6. Wash locally repaired areas using a mild water-mixable detergent and wipe them clean with solvent, immediately before paint application.
7. To ensure that the area of exposed metal due to damaged paintwork is thoroughly cleaned, the cleaned area should be extended beyond the area of the original damage.
8. Treat the bare metal with an etch phosphate to remove all traces of rust and to provide a good repair environment for new paint coats.

Flat Lacquer

The flat lacquer is a special kind of paint and special care should be taken in car washing and car care.

It is recommended to wash the car manually; please do not use rough sponge or car wash cloth. When cleaning and wiping, please do not use excessive force. Do not wash the vehicle in direct sunlight.

- Do not use high pressure or steam to clean the vehicle. If the vehicle is dirty, it needs to be pre-cleaned before washing to clean the body dust and other particles that may damage the paintwork first.
- Spray the body with plenty of water and dry the body after washing from the top down using a soft sponge and a neutral wax-free car washing liquid.

In daily car care, the followings should also be noted:

- If the paint film comes in contact with resin or grease, as well as insect residue or bird excrement, etc., remove them immediately to avoid irreversible damage to the flat lacquer.
- If there is oil or fingerprints on the flat lacquer, remove them immediately with a clean rag; do not use excessive force to avoid irreversible damage to the flat lacquer.
- To maintain the matte effect of the paintwork, abrasives, polishing agents and polishing waxes cannot be used and the body cannot be polished.
- Do not use any stickers, patches, magnets and other similar things to prevent damage to the paintwork.
- Always have the paint film refinished in a qualified professional repair shop.
- Flat lacquer repair requires whole piece spray treatment.

Coating Process

The automotive coating process is generally divided into two sections: One is the metal surface treatment before coating, also known as pretreatment technology; the other is the coating application process.

Surface Pretreatment

The surface pretreatment mainly consists of:

1. Surface cleaning: The mud, dirt and other foreign objects on the complete vehicle should be cleaned thoroughly during coating operation. Attention should be particularly paid to the dirt at the door frame, trunk, bonnet apertures and wheelhouse, which, if not cleaned up, may cause splotchy new painted film.
   - Chemical soluble substance treatment: Apply the degreasing agent to the surface with a piece of special cleaning cloth, and then wipe off the degreasing agent and removed residues, such as grease, with another clean and dry cloth.
   - Treatment of water and floating dust: Use a piece of clean and dry dust-sticking cloth to absorb the water and floating dust, then blow the surface dry with a high pressure air gun.
2. Coating Identification and Damage Assessment:
   - Coating identification: It is important to identify the category of the coating on the body panels in repainting process. If it is not correctly identified, the serious problems may occur during finish application. If one vehicle has not been resprayed up to now, the category of the coating can be identified based on its model manual, but the category of body coating must be identified when repaired if the body has been resprayed.
   - Damage assessment: Assessing the damage properly is one of the critical factors to determine the repair cost and ensure the coating quality. The repair scope can only be determined after the proper damage assessment, then the scope of each treatment process, transition area, the area to be covered and the parts to be removed can be defined, which will lay the foundation for the correct implementation of subsequent processes and satisfactory repair quality. The assessment methods for film damage include visual, touch and ruler assessments:
3. Old film removal: Examine the body coating carefully after washing the body to find the damage signs on the film, such as bubbles, cracks, peeling, rust and some damages resulting from paint baking, make-up, gas welding and other repairs. For the above damages, the old film must be wholly or partially removed based on the degree of old film damage and the quality requirement after repainting. The #P80 - P180 abrasive papers are recommended to make out the feather edges (not less than 3 cm).

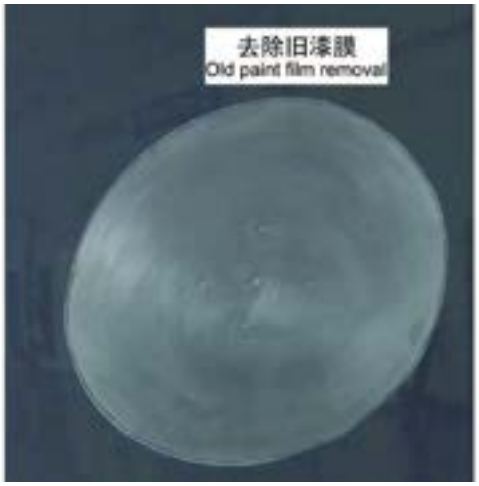

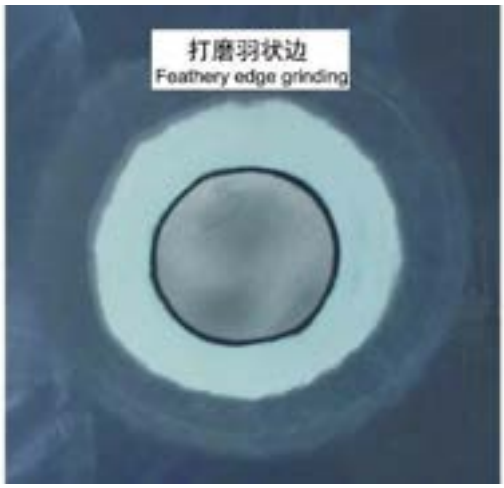

Precautions for mechanical polishing:

a. Do not use the electric sander to make cross sanding on surfaces with large curve radian and high projection or very low dent;

b. Do not use the electric sander to sand the corners, wrinkle gaps, welding seams, sticking joints or the area that has been applied with plastic sealant.

c. The sander can only be activated to sand when contacting with the panel surface; do not apply pressure, or deep scratches will be made; the sander should be aligned with edge line to be sanded before it is activated;

d. To avoid the panel deformation caused by overheating, do not place the sander in the same position for a long time;

e. Do not make the well painted surface around the sanded area contact with the coarse sand abrasive; it is better to protect the perfect coating with tapes.

Sanding operation: The refined processing to the surface experienced rough sanding aims to obtain a more flat surface. Align the front of the rotating grinding wheel with the sanding surface, and get the rear part away from the surface a little. Keep this angle and move the sander up

and down to sand; the covered area between each grinding crack is better to be 50% - 60%.

Panel replacement: Use #P280 - P320 abrasive paper to carry out dry sanding over the electrophoretic primer layer of the new part.

4. Grease and rust removal from metal surface:

- Remove the rust spots from the surface. The methods used to remove the rust from metal include: manual rust removal (polishing, sanding, high pressure water, etc.), mechanical, chemical and ultrasonic rust removals. Different rust removal methods are selected depending on the rust conditions.
- Clean the metal surface again.

Each Coating Application

When you perform coating repairs over the panels which have been experienced surface pretreatment, please refer to the detailed process as below:

1. Primer Spraying

- Cover the surrounding of the repaired area;
- Wipe the surface to be sprayed with a piece of soft cloth soaked with detergent, while wipe the detergent left on the surface with another clean and soft cloth;
- Blow the surface with compressed air;
- Spray the anti-corrosive primer and let it dry;

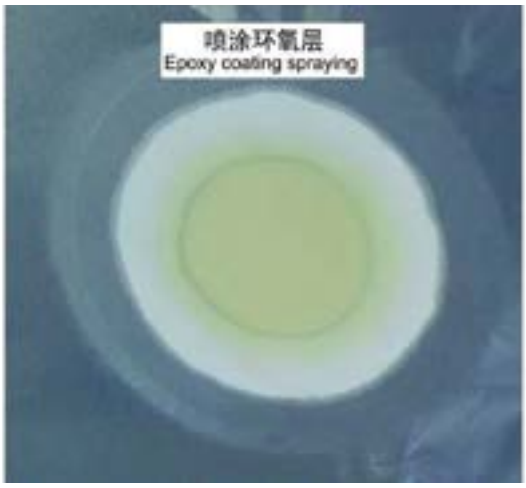

2. Putty application (not required when replacing new parts)

- Mix the putty and curing agent in the proportion defined in the instructions;
- Use a clean putty mixing plate; only mix the amount of putty to be used by this time;
- Fill up the sanding scratches and air pores, then apply the putty thoroughly;

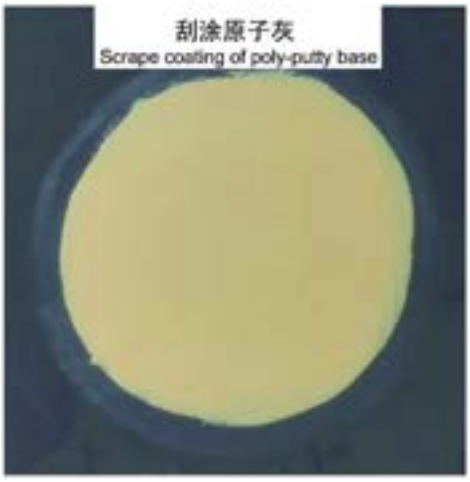

- Let it dry for 5 minutes after application, and bake it with an infrared baked lamp according to the requirement in putty instructions;
- Wear the respirator, select the proper type of abrasive paper, then sand the surface together with hard sanding pad. The rail sander can also be used, but be careful not to sand the surrounding areas. When the sanding pad is used, sand in the horizontal direction and move from up to down gradually.
- Use the air blow gun to clean the repaired surface;

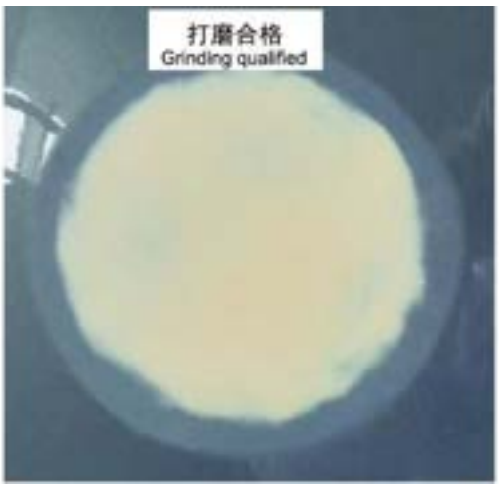

- Wipe the surface with a piece of soft cloth soaked with detergent, while dry the surface with another clean cloth;

3. Surfacer Application

- Cover the surrounding of the repaired area and prepare to spray the surfacer; the periphery of the covered area should be longer than the area to be sprayed by more than 10cm;
- Wipe the surface to be sprayed with a piece of soft cloth soaked with detergent, while wipe the detergent left on the surface with another clean and soft cloth;
- Blow the surface with compressed air;
- Mix the surfacer, curing agent and diluent in the proportion defined in the instructions;

- Firstly, spray a layer of surfacer lightly and let it dry for 5 minutes, then spray it wet twice;

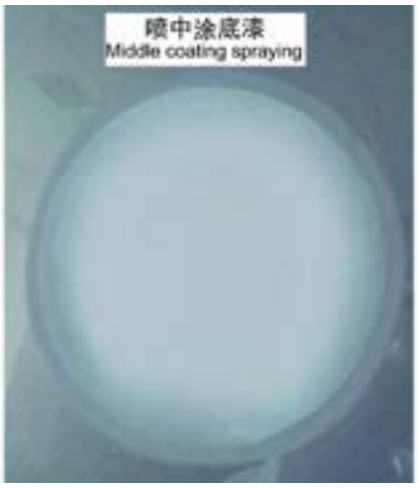

- When the paint film flows level for 10 - 15 minutes, the film can be cured with an infrared baked lamp;
- Spray the sanding indication layer on the surface, so that it is easy to find the uneven locations when sanding.

- Sand the surface roughly with #P240 - P400 abrasive paper, then sand it finely with #P600 - P800 paper;

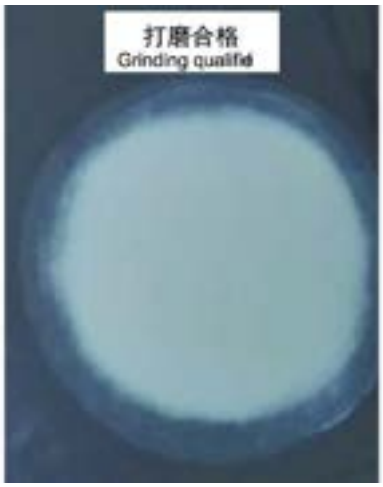

- Remove the masking paper along the periphery of repaired area, then blow the inside and outside surfaces of this area with compressed air to remove the abrasive dust and water thoroughly;

4. Finish Application
   - Check the color code, and find out the color formulation according to the codes;
   - Polish the body surface around the repaired area to obtain the exact color matching;
   - Check the difference between the mixed color and the original body color with the assistance of daylight stage lamp or in the sunlight;
   - Spray the color test board under the same conditions with the vehicle to be sprayed (dilution rate, spray distance, air pressure, amount of sprayed paint, temperature, dry time, etc.);
   - Let the test board dry for 15 minutes, then bake the board at the specified temperature within the set time. Note that do not overheat the test board when heating and curing;
   - Wipe the area to be repaired with a piece of soft cloth soaked with detergent, while dry it with another clean cloth;
   - Cover the surrounding of the repaired area, and start to paste the papers from the inside of the repaired area; be careful not to tear the masking papers;
   - Blow the panel to be sprayed and the complete vehicle with compressed air, be careful not to tear the masking papers, and finally wipe the surface with dust-sticking cloth;
   - To prevent the dust, particles and other impurities from entering into the paint, pour the mixed paint into the gun tank with the help of screen;
   - Spray to check the air pressure, the amount of sprayed paint, sector pattern and atomization;
   - Wet spray two layers of colorant; the leveling between each layer takes 5 - 10 minutes;
   - For the aluminum paint, make a lightly sprayed layer at last to ensure the aluminum powder is distributed evenly;
5. Varnish Application
   - After spraying the pigmented paint layer, let it dry for about 15 minutes (the colorant layer totally loses the gloss), and spray the varnish: firstly, wet spray a layer of varnish and let it dry for 5 - 10 minutes; next, wet spray the second varnish layer, let it dry for 15 minutes and carry out heating and baking; (Note: Do not turn off the ventilation system fitted in the spraying booth during the phase of drying after spraying)
   - Heat and cure the film at the specified product temperature within the set time. Or, dry it forcibly for 15 minutes using a far infrared baked lamp;

- After heating and curing, the further treatment (e.g. sanding, polishing) can only be done when the film is cooled down completely.

6. Polishing and Waxing

- #P1500 or P2000 abrasive papers can be used to polish the defects on the coating, such as dust spots and sags, when the film is completely cooled down.
- Grind the sanded area using slack waxes together with wool wheels. At the start of grinding, the rotating speed of polishing machine should not be too high but increase slowly;
- Perform the polishing with fine wax and sponge wheel;
- Replace with a clean sponge wheel and remove the swirl marks left by polishing with polishing wax to allow the coating to restore its original gloss.
- Examine the accuracy of color mixture at the sprayed area in the lamp light, and then move it to outdoor and check it under sunlight.

7. Cosmetic and Cleaning
8. Information for Various Brands of Paint

	Recommended Paint Manufacturer and Product Model		
	PPG	Sherwin-Williams	Akzo Nobel
Primer	P565-895 P565-9850 P565-9085	E2G973 GBP988-AR UPO7299 UPO7226-3	#680 Gray Primer Protective Green Primer Sikkens Universal Plastic Primer Alloy Primer 1K 1CF/EF
Putty	P551-1050 P551-1052 P551-1057	18380221	Sikkens Kombi Filler Alloy Putty
Primer Surfacer	P565-510/511 P565-5601/5605/5607	P30 P50	Sikkens Autosurfacer® Classic Sikkens Autosurfacer® Classic - Rapid
Varnish	P190-376 P190-6850 P190-6060 P190-6208+P210-6863 P190-588AP210-790/938/939 P190-588+P210-760/790	CC645HS HPC15 CC939 CC931 CC930 CC655	Sikkens Autoclear® Plus HS Sikkens Autoclear® Xcel Autoclear® Autoclear 2.0 Autoclear® Rapid Autoclear® Mat
Finishing Coat	NEXA Autocolor 2K (oil paint) Aquabase plus (water paint)	Ultra 7000 (oil paint) AWX (water paint)	Sikkens (oil paint) Sikkens Autowave (water paint)

Film Inspection Method and Defect Identification

Paint Film Defects Caused by Application and Treatments

Particles

The phenomenon that bumps in the film coatings are spread over the whole or local surface in granular form.

Analysis of Possible Causes:

- Poor air cleanliness and impurities in the painting environment, such as dust;
- Workers wear dirty clothes or the fibers contained in the materials are easy to fall out, substrates that are not properly handled have bumps, the vehicle body is not cleaned thoroughly, etc.
- The painting pressure is insufficient, atomization is poor, the spray gun is not cleaned up and an improper screen is selected;
- The pigments or flashing materials in the paints are badly dispersed, the paints are unfiltered or filtered improperly, the paints become deteriorated and show abnormal signs, such as separation-out, flocculation.
- The painted object is moved out of the baking booth before drying the film to dust-free.

Preventive Measures:

- Ensure that the spraying environment is clean;
- Ensure that the objects to be painted and workers are cleaned thoroughly before entering the baking booth;
- Ensure the paints' performance; the deteriorated and poorly dispersed paints are not applicable;
- Set the optimal parameters for paints' application and use the spray gun to spray after the paints being filtered.

Defect treatments: The tiny dirty spots can be polished after removed by abrasive paper; if the impurity particles are large or there are dirty spots on the surfaces of primer and even surfacer, grind them to the extent that the spots disappear completely, and then perform the spraying again.

Sags

Upon the liquid paint is sprayed onto the workpiece surfaces, some wet film surface runs down, creating unevenly stripes and sags thin on the top and thick on the bottom resulting from the local thicker film on vertical surface. It can be divided into sinking, sagging and running depending on the shapes of sags.

Analysis of Possible Causes:

- The painted workpieces' surface is too cold;
- Low application environment temperature, slow wind speed and high solvent vapor content in the ambient air;
- Low product temperature, low spraying pressure, slow gunning speed, short distance to spray gun, and thicker film;
- Large caliber of spray gun and poor atomization of spray gun;
- Slow solvent evaporation rate and low paints' viscosity;
- Short distance between spray gun and workpiece, slower gunning speed, and thicker spraying coatings;
- Insufficient flash-off intervals between layers;

Preventive measures:

- Improve the painting environment, and control the appropriate ambient temperature, humidity and wind speed.
- Select the correct solvent and pay attention to the dissolving capacity and evaporation rate of the selected solvent;
- Strictly control the viscosity and the temperature for coating application;
- Reduce the amount of paints from spray gun, and increase the gun distance and gunning speed;
- Full flash-off between layers;

Defect treatments: For the slightly local varnish sagging, it can be sanded to eliminate the sagging defects before being polished if this defect exists; or if the sagging defect is more severe or it appears on the surfacer layer and the pigmented paint layer (finally revealed on the layer of varnish), the sagging must be sanded thoroughly before making the spraying again.

Pin Holes/Eyes

The blisters or solvent bubbles appearing on the film with small needle holes on their top are referred to as pin holes (the solvent contained in the film coatings evaporates rapidly during the surface drying, and its left trace forms hole); these pin holes are known as defects when they are still visible on the surface after spraying the finish due to some holes on the substrate that are not filled up. They are easily generated at the corners of workpieces.

Analysis of Possible Causes:

- Pin hole: The paints are mixed with impurities, for example water enters into the solvent based coating; the painted objects have dirt on their surfaces; the flash-off intervals between layers is insufficient during application; the continuous spraying is too thick; the temperature rises up suddenly and the surface is dried rapidly when stoving.
- Pin eyes: The uneven locations on the original workpiece surface are not filled up;

Precautions and Improvements:

- Set appropriate temperature and humidity for application. Wind speed and other conditions;
- Mix the paint and solvent in proportion to ensure the proper fluidness;
- It should be heated up slowly to avoid the rapid solvent evaporation.
- Full flash-off intervals between layers;

Defect treatments: The defects should be completely ground to remove the pin holes and pin eyes, then repaint it.

Blistering

Part of the film coating floats off the painted surface or prime coat and is filled with liquid or gas, which is about 1-5mm in diameter or floats off in large pieces. If there is some water under the film, the vapor generated by evaporation of water will plump up the film to form blister when the temperature rises up.

Analysis of Possible Causes:

- The ambient humidity is high and the film is dried naturally after spraying, resulting in moisture infiltrating into the film;
- The substrate is not dried properly, the drying time is short between coatings, the heating and drying are too fast;
- Grind the putty while adding water, so that the putty absorbs water;
- There is oil or water in the compressed air lines;

Preventive Measures:

- Grind the dry putty;
- Ensure that the previous coating has met the requirements for cleanness and dryness before spraying;
- Reduce the humidity in the painting and spraying room;
- Use the curing agent and diluent suitable for ambient temperature, and make the film coating dry as soon as possible once the spraying is completed to prevent the moisture from infiltrating into the film.

Defect treatments: Once blisters appear on the film surface, this surface should be ground to remove the blistering defects completely before respraying it depending on the surface conditions.

Orange Peel

The orange peel is used to describe the leveling property of the film: When you observe the film surface against the light, you can see different ripples of 1 - 5mm presenting on the film surface, and the brightness and plumpness vary in different ripple areas; such texture on the film surface, which is similar to orange peel, is thus named in this way.

Analysis of Possible Causes:

- The substrate is not flat or the finish coating is sprayed before grinding to smooth the orange peel on the surfacer surfaces;
- The ambient temperature is high, the wind speed is fast and the substrate temperature is high;
- The diluent volatilizes rapidly, the paint has high viscosity and the film is too thin;
- The distance from spray gun is too far, the gunning speed is too fast, the spraying pressure is low and the amount of paint out of spray gun is limited;

Preventive Measures:

- Grind the surfacer coating completely smooth according to the process requirements;
- Control the ambient temperature and wind speed (0.2 - 0.6m/s);
- Use the diluent suitable for that temperature, and adjust the paint viscosity as per the paint manufacturers' product instructions.
- Adjust the gun pressure, then regulate the gun to proper distance and reduce the gunning speed as per the manufacturers' instructions;
- Spray the appropriate layers to ensure that the film get the desired thickness;

Defect treatments: Only perform the grinding and polishing if the defect of orange peel is slight; the orange peel should be ground until it is completely removed and then be resprayed if the defect is serious.

Sanding Scratches

The sanding scratches left by substrate sanding are visible on the film after spraying the paint. Sometimes, the sanding scratches on the substrate will extend due to the erosion caused by solvent contained in the film, and the upper film would be subsided gradually after a period, resulting in the increasingly obvious sanding scratches.

Analysis of Possible Causes:

- If the improper abrasive papers are used to sand the substrate, the sanding scratches will be wide and unable to be covered and filled up by upper film;
- If the lower film is sanded and sprayed with upper film over it before it isn't totally dry, it is easy to make the sanding scratches to extend due to the erosion caused by solvent in the upper film and form the sanding scratches defect;
- The diluent that has high solubility for upper paint or is too slow to dry has been misused.

Preventive Measures:

- When you select the abrasive paper number to make sanding, you should observe the principle that the

abrasive paper number should not be jumped by 2 levels each replacement;

- Ensure that the lower film is totally dry before sanding;
- Select the correct upper film solvent as per the product instructions;

Defect treatments: For slight sanding scratches, they can be removed or made less obvious by sanding and polishing as they have been filled up by paint; For the sanding scratches that are more obvious, they cannot be removed by sanding and polishing, and respraying is required after they are removed.

Putty Marks

A putty mark means the defect that trace is left along the edges of putty application areas after spraying the surfacer or finish.

Analysis of Possible Causes:

- The feather edges are improperly treated before putty application;
- The putty is mixed with curing agent in improper proportion;
- The next operation is taken before the putty is completely dry (sanding, spraying the surfacer, etc.);
- The putty is not flat enough; the feather edges do not meet the standard, and it is higher or lower than the old surrounding coatings or metal;
- The curing agent and diluent mixed in the surfacer or finish are dried slowly, or the flash-off intervals between layers are too short when spraying the surfacer or finish, and the solvent penetrates and erodes the putty, resulting in the expanded and extended edges.

Preventive Measures:

- The width of the feather edges must be 20 - 30mm and the surface is smooth before putty application;
- Adding the curing agent in proper proportion according to the product instructions;
- Make sure to perform the sanding and spray the surfacer when the putty is totally dry.
- Use the correct curing agent and diluent, and ensure the flash-off interval between layers is enough.
- The periphery of putty must be sanded to be qualified. Not only the putty, but also the extended old surrounding coatings should be sanded when you sand the putty edges to allow the putty together with the surroundings to form flat surface.

Defect treatments: Once the putty marks appear, those areas should be sanded, and apply the putty again and respray the surfacer and finish.

Lifting

The lower-layer paint is single-component, or even if it is two-component, it is not dry and cured completely (including improper amount of curing agent), when the paint is sprayed above it, the solvent contained in upper film will erode the lower film, causing the uplift and shrinks present on the lower film surface.

Analysis of Possible Causes:

- The lower film is not totally dry;
- The lower film becomes deteriorated;
- The continuous spraying of surfacer or finish results in too thick surface, or the used curing agent and diluent are too slow to dry, or the diluent with high solubility is used, or the flash-off intervals between layers are too short when spraying the surfacer or finish, or there is low air temperature during the spray, causing the infiltration and erosion of solvent contained in the surfacer or finish and thus resulting in the lifting occurring at the putty edges, one-component putty or surfacer edges.

Preventive Measures:

- For the film not totally dry, it must be sanded and sprayed with the next layer paint after it is completely dry. If it cannot be totally dry due to the improper adding of curing agent, it needs to respray the paint mixed with proper curing agent after film removal.
- For the deteriorated film, shown as chalking, cracking, loss of gloss, they must be removed totally and resprayed with two-component surfacer or finish;
- Use the correct mating curing agent and diluent, and ensure the flash-off interval between layers is enough.
- Use the two-component putty and surfacer.

Defect treatments: When the lifting defect appears, it should be sanded to remove any defects at the lifting area; if the lifting is severe, the film that has lifting should also be sanded and removed completely, and then the two-component surfacer and finish should be resprayed.

Paint Film Defects Caused by Operating Environment and Treatments

Paint film defects caused by external corrosive materials

Defect phenomenon: The film defects occur when the film is affected by the acidic and alkaline materials as well as industrial fall-outs, such as asphalt, oil, battery electrolyte, bird droppings, sap, acid rain, pollen, dust produced by steel plant and black carbon from boiler stack. It generally appears as uplift, discolor and even cracking and peeling caused by the contaminants infiltrating into the film.

Defect treatments: If the film defect is tiny, it can be recovered only by polishing the surface damage; if the film has

been discolored, the defective areas should be sanded until eliminating the defect, then respray it.

Water Spots

Defect phenomenon: When the rainwater on the film surface or the tap-water left by car washing is heated to evaporate, a white ring drop mark will be left on the water-drop area and cannot be removed by common cleaning methods.

Causes: As the water contains mineral substances, such as calcium, when the water is heated to evaporate, some warm water will infiltrate into the softened film with heat, and the left mineral substances infiltrate into the coating.

Defect preventions and treatments: Try not to wash the car under the sunlight, and wipe the water drops off the vehicle surface after washing to avoid evaporation caused by heating. It should only be polished when water spots appear.

Stone-crash Damages

Defect phenomenon: Some small stones may hit the film and cause the film peeling during vehicle travelling, and the area where the film is peeled off usually forms the surface with sharp and jagged edges; sometimes a small indentation will appear in the middle of this area. The front edges of the vehicle bonnet or the roof are usually damaged by stones.

Defect treatments: When the stone-crash damages occur, the film on the defective area must be removed and sanded to feather edges, and filled up with putty or surfacer, and then the surfacer and finish should be applied again; if the area hit by stones is rusted, the rust must be removed thoroughly.

When new original parts are sprayed, if the finish is directly sprayed onto the electrophoretic coating without spraying surfacer, and when the plastic parts are sprayed, if the surfacer and finish are not added with softening agent depending on the plastic hardness, the stone crash protection for the film will be reduced and the film is easy to hit off by stones and sands.

Discolor/Chalking/Loss of gloss

Defect phenomenon: As the vehicle exposes to the ultraviolet rays, the pigment deterioration of the film causes color fading, the resin deterioration causes yellowing, and the film peels off as powder and loses gloss.

Defect treatments: Color fading is a representation of film aging, and it is usually shown up together with chalking and full loss of gloss. Once any one of these defects occurs, the defective film must be sanded and removed thoroughly before respraying the two-component surfacer and finish.

Sealing

Overview

Process Area of Underbody Seal

Underfloor areas and sill outer panels should be processed with Plastisol PVC underbody sealer. This sealer is not suitable for reuse. When repairing the sealant for the underfloor areas, the underbody sealer upon delivery should be peeled off and returned to the proper breakpoint. Do expose the clean metal surface, and the current sealing edge should also be firmly attached to the panels.

Use new underbody sealer between primer and intermediate coat. If necessary, use the joint sealant before applying the underbody sealer. Before coating the underbody sealer, do firstly fit the plugs and insulating ring on the disk type floor (except for the part for wax spraying). Refit the heat-fusible plugs damaged in repair with heat blower or replace them with rubber insulating ring.

Caution : Ensure that suspension units, wheels, tyres, power unit, exhaust system and brake system (including all mounting points) are covered prior to application of new underbody sealer.

Joint Sealant

Joint sealant is used after applying the primer and before applying the intermediate coat and top coat. Joint sealant must be sprayed smoothly and continuously, and the spraying line depends on the joint type. If the sealant is coated by brush, pay special attention to keep the due cover area of the joints. At the places needing sealant formation, you can use cloths dipped in the solvent oil to complete the required operations.

Do seal all the joints needing to process after each repair. When the vehicle is damaged, the area away from the impact point is usually twisted. Thus, in the following repair and alignment, the sealant at this place is often touched. Check all joints around the repaired area to see whether they are damaged, then process the damages as required, then apply new sealant. Specific steps are as follows:

1. Clean the affected joints, and re-process the exposed metal area with proper etch primer;
2. Apply proper sealant at the required places;
3. Process the affected area with acid-etch primer (underbody sealer is also available) and apply proper pigmented paint film.

After the re-assembly or refit of parts is completed, if the joint is plugged, then paste joint sealant can be applied to such joint. After the panels repair are finished, the seams may be plugged. Under this circumstance, apply the sealant and spray the paint before the final assembly. If the entrance size is suitable, apply the joint sealant on both side of service fitting. If the spray coating can be only operated to one side (such as compartment), then use cavity wax to process the affected compartment beam.

The joint sealed with sealant when assembling is described in detail as below:

Caution : Check all the joints near the repair areas thoroughly. If necessary, all the combined, repaired or replaced areas should be sealed. These areas should not be contaminated by moisture. Sealing could protect from moisture and wind noises and so on. Before the final inspection, it is necessary to check all the sealed areas.

PVC sealer applying method:

Process	Operation Mode	End View of Implementation Effect	Parts
PVC Sealer	Smear sealer		On the mating faces where the components are going to be fitted and the seam parts with attractive requirements such as the tail lamp, joint area of the bodyside and head cover, and visible areas after assembly.
	Brush Sealer		To the seam parts without attractive or assembly requirements (cover the seams, with the width < 50mm) such as interior floor seams, and under body.
	Inject Sealer		At the covered edges of four doors and two lids (1-2.5 mm in length, 5-9 mm in width)

Plug

Plug Category	Single-pack plug	Two-pack Plug
Application Workshop	Paint or Assembly Workshop	Paint Workshop
Material	EPDM, TPE, PA6, TEEE, etc.	(PA6-GF) + heat-fusible sealer, sheet metal + heat-fusible sealer, TPE + heat-fusible sealer, etc.
Sealing Performance	Leak doesn't occur in the event of 30mm height of spout for 10 min	Leak doesn't occur in the event of 500mm height of spout for 10 min
Application Part	Areas around four doors, bodyside, etc.	Areas around the floor, spare tyre compartment, etc.
Remarks	To seal the holes indirectly connected to the passenger compartment or those unlikely to contact water.	To seal the holes directly connected to the passenger compartment and to the exterior horizontal arrangements.

Tightness Inspection

Overview

Handling of the leaking problem needs to combine techniques, experiences and instincts to take proper and effective measures. Do not come to conclusions fast only by naked eyes.

Inspection Tools and Instruments

When checking and correcting the leaking problems, the tools and instruments below are recommended to use:

1. Garden Sprayer (hand-operated)
2. Wet/Dry Vacuum Cleaner
3. Dry, Absorbent Cloths
4. Battery Torch
5. Mirror
6. Weatherstrip Locating Tool
7. Trim Panel Remover
8. Small Wooden or Plastic Wedges
9. Dry Compressed Air Supply
10. Hot Blower
11. Sealer Applicators
12. Ultrasonic Leak Detector

When checking the leakage, at least the following parts should be checked:

- Front Inner Space;
- Rear Seat Space;
- Storage Box or Trunk

Inspection Methods and Measures

The operators at the fittings center can judge from where to check the leakage by information offered by the customers. The next step is to find the leaking spot after the leaking place is founded.

For the first case, an easy and effective method is to use the common garden sprayer. Nozzle of this extruding garden sprayer ought to be adjustable, so that water can be sucked into the nozzle directly and sprayed out properly. At the dark corners, a mirror or battery torch can be used (the test light using supply voltage is not allowed).

The test order is very important. Begin from the lowest point and go up gradually, which can avoid blocking off the other leaking place when an area is being checked. If the test begins from the windscreen, any water flowing into the pumping chamber may drop on the pedal by baffle insulating ring. Even though, it may be judged wrongly that seal of the windscreen fails.

Another part for leaking check is to visually observe whether the door hole seal, insulating ring or weatherstrip is damaged, aged or displaced. Meanwhile, align the door with the seal.

Note：Check the colour of the leaked water. If the water is dirty, the leak is from under the vehicle. If the water is clean, it is from above the vehicle.

When the leaking spot is found, the following methods are necessary to resolve the leaking problems:

1. Replace all of the damaged, displaced and aged door hole seals and weatherstrips.
2. Check all the vehicle seals and ensure they are fixed on the fixing flange/fixing face correctly. If necessary, a curved knife can be used.
3. Blow the vehicle welding seams to be processed with compressed air and/or hot blower at required place.
4. If necessary, the coating of sealant on the outer side of the joints can be used to prevent water.
5. When correcting leakage of the windscreen and weatherstrip (or polishing between the upper glass and the body directly), try best not to remove the glass. Use qualified materials at proper places (such as glass to the weatherstrip or glass to the body).

Replace Initial Door Weatherstrip

The initial weatherstrips of the front and rear doors shall be pasted in a fixed position. Do comply with the following regulations when replacing the seals:

- Clean the places to be sticked with seals on the door thoroughly. Do not clean the doors with paint diluent agent.
- The perfect temperature for sticking seals is 25°C (77°F). When the temperature is below 18°C (64°F), the paste effect for either the door or other sealed locations will be worse.
- The strength should not be too big when sticking the seals; this is easy for either disassembly or re-installation. If the seals needs re-sticking, do not touch the contact face or stain it.

Sealant Position Information

Body Seal Identification

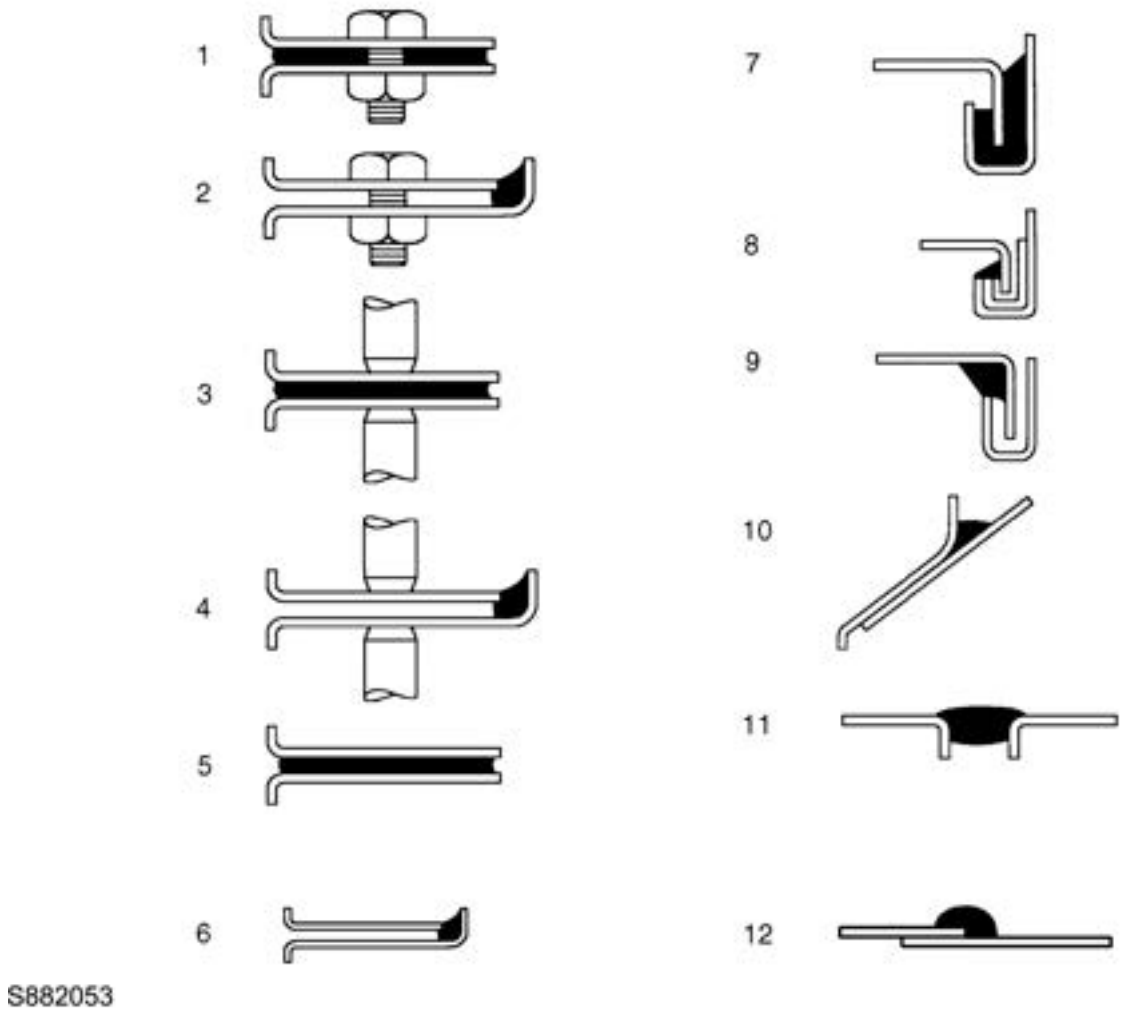

1. Between Panels - Bolted Connection
2. Panel Edges - Bolted Connection
3. Between Panels - Spot Welding
4. Panel Edges - Spot Welding
5. Between Panels - Bonding
6. Panel Edges - Bonding
7. Riveting Joints - Type (a)
8. Riveting Joints - Type (b)
9. Riveting Joints - Type (c)
10. Panel Gaps - Type (a)
11. Panel Gaps - Type (b)
12. Lap Joints

Sealant Information

After the panel is welded or replaced for repair, it is required to use PVC sealant to seal the weld seam and the new panel according to the following construction principles and the instructions on gluing position given by the original manufacturer to guarantee the repair quality:

- PVC brushing glue requirements: cover the weld seam to make the surface smooth and even without fillets, and the width < 50mm.
- PVC tube glue requirements: cover the weld seam to make the surface smooth and even, the width is within 5-9mm and the thickness within 1-2.5mm.
- PVC frictioning glue requirements: cover the weld seam to make the surface smooth and even without pinholes or bubbles.
- Apply thumb glue in the following red dots, and for any place not specifically described in the figure below, brush sealer shall be applied.

Front Compartment

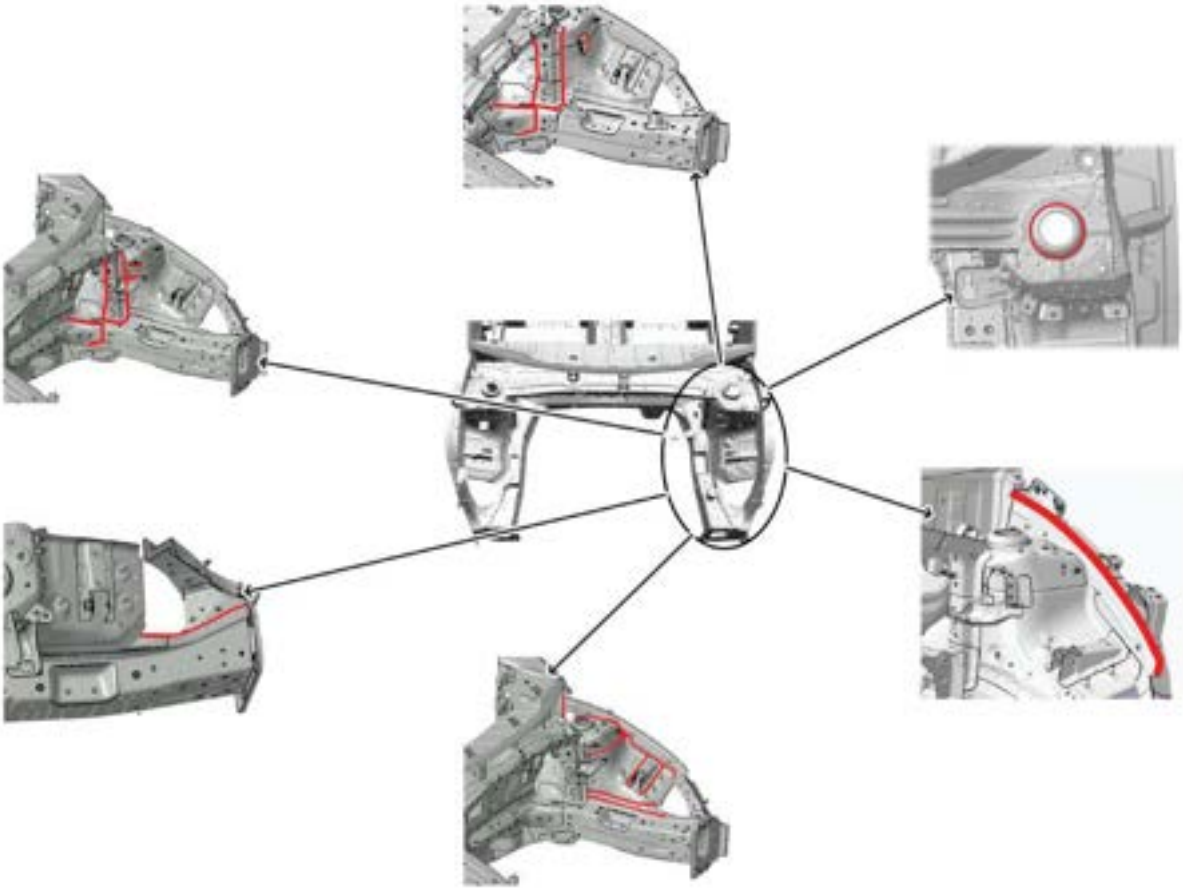

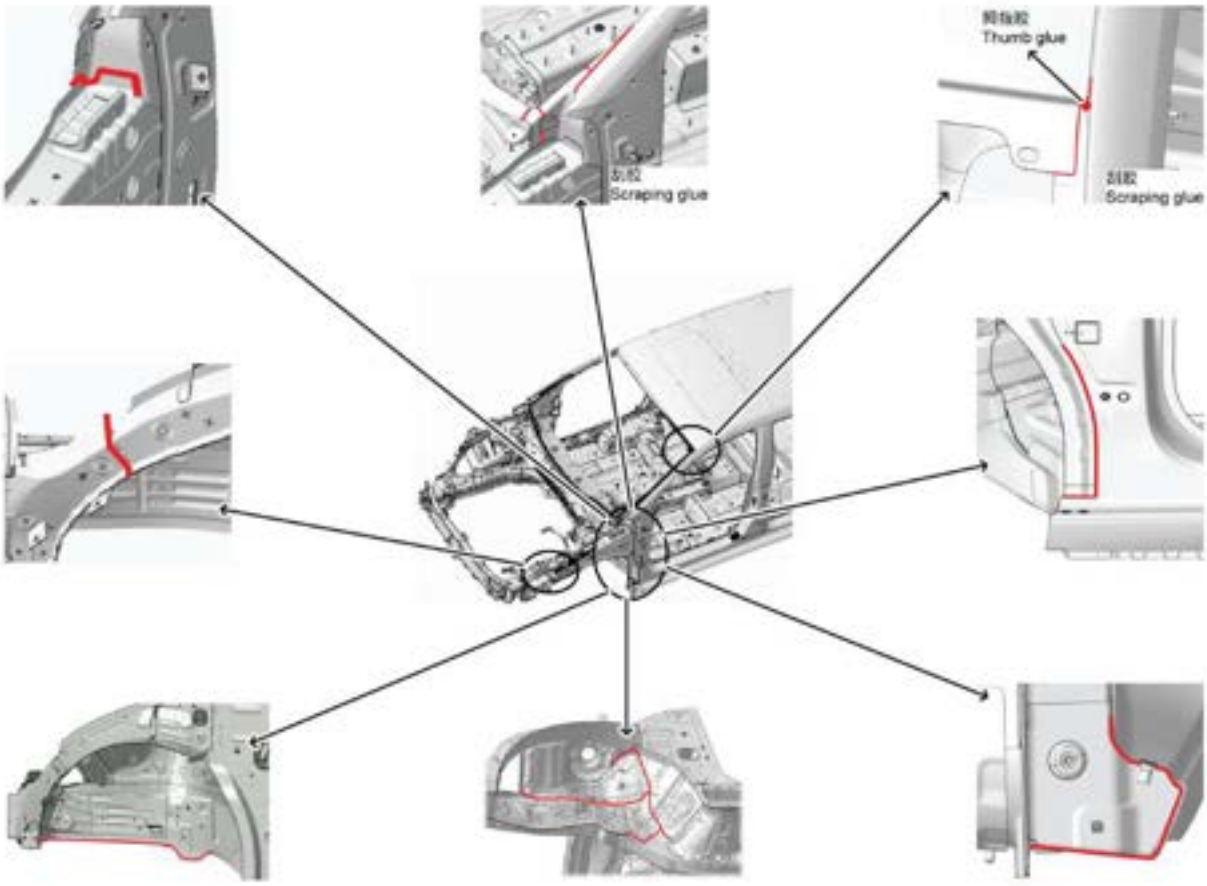
Scraping glue
Thumb glue
Scraping glue

Interior Compartment

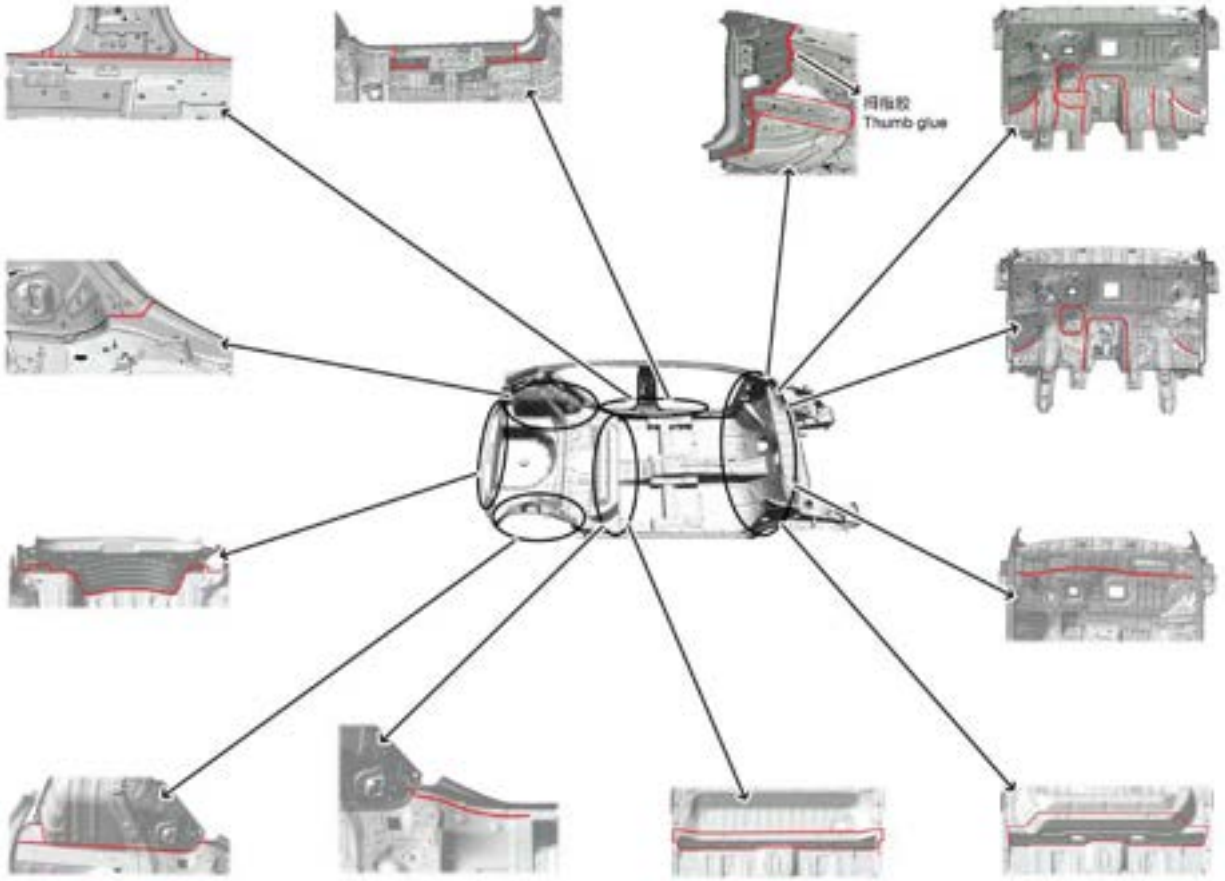

Floor Panel

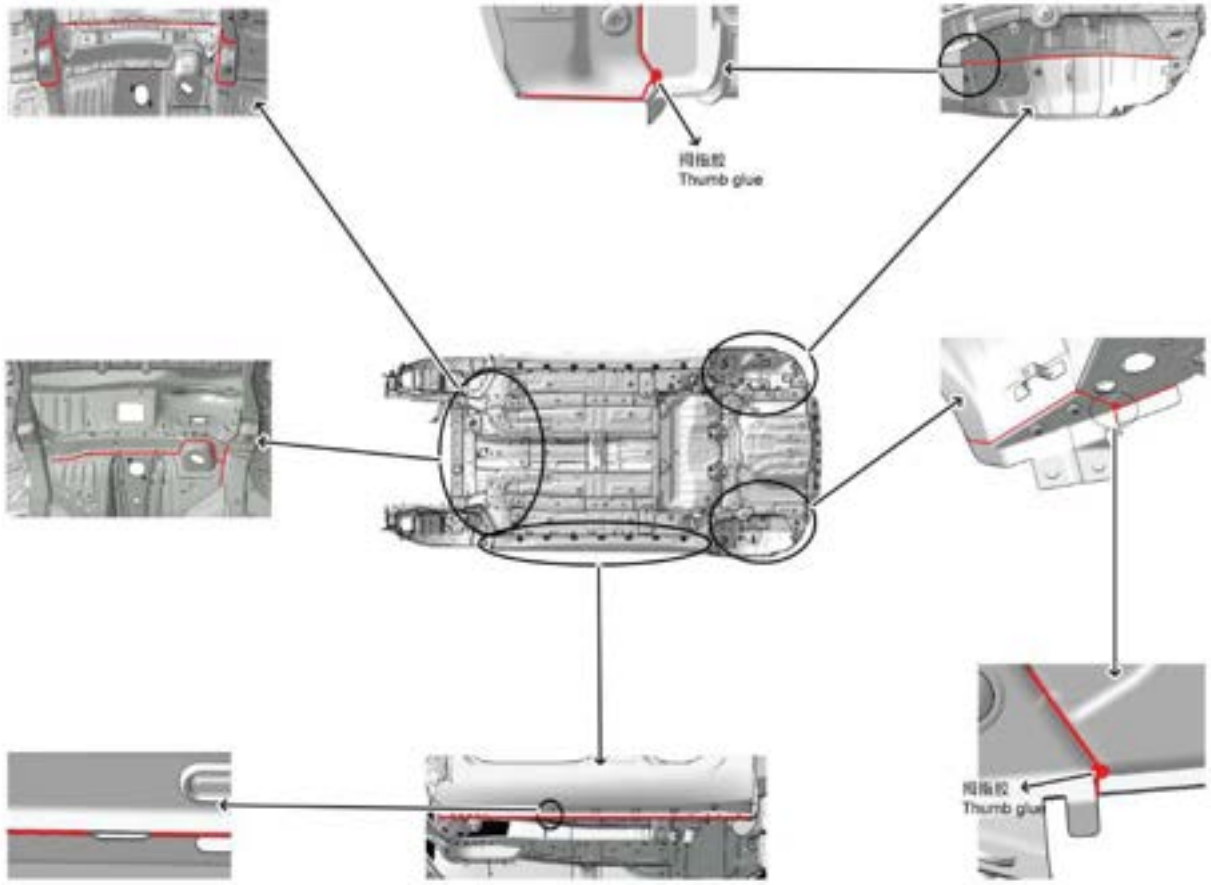

Rear End Panel

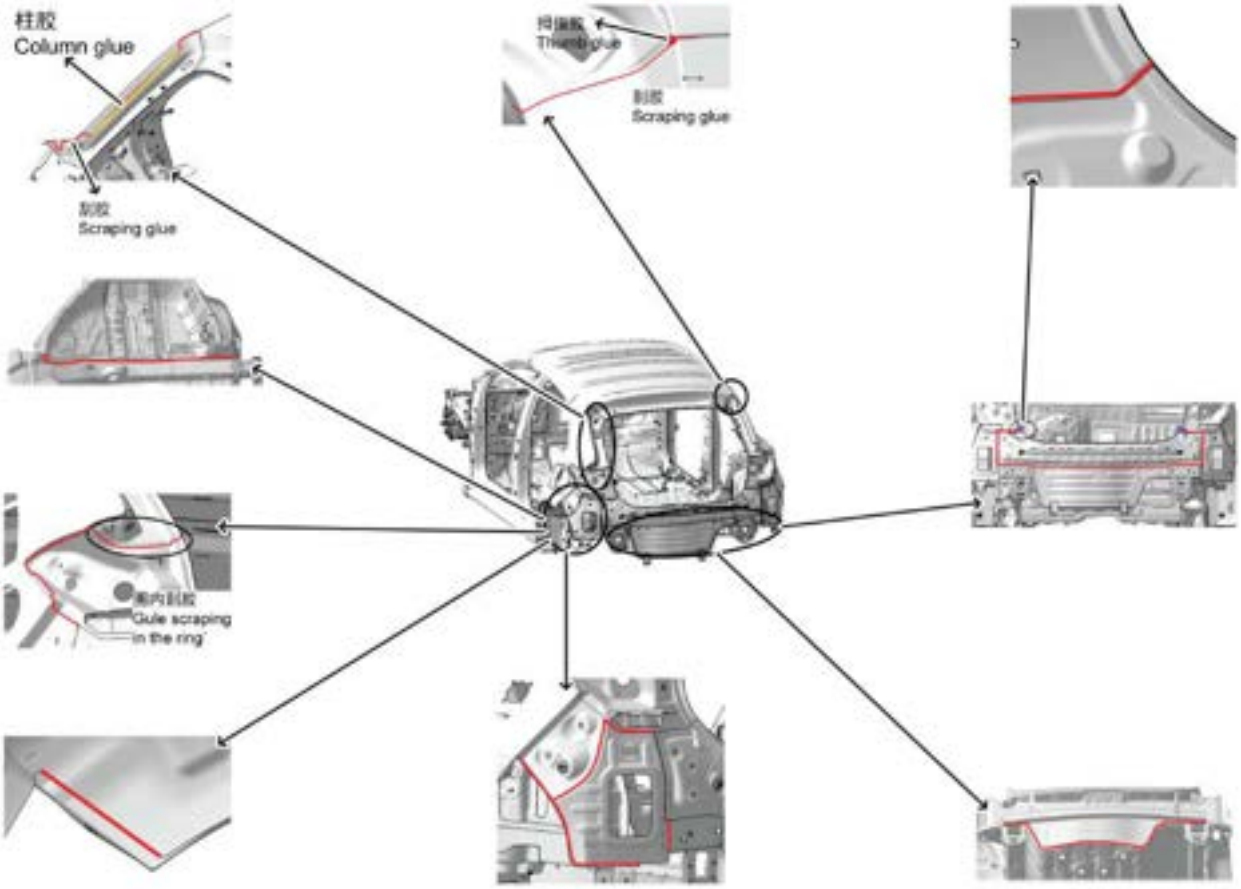

Bonnet

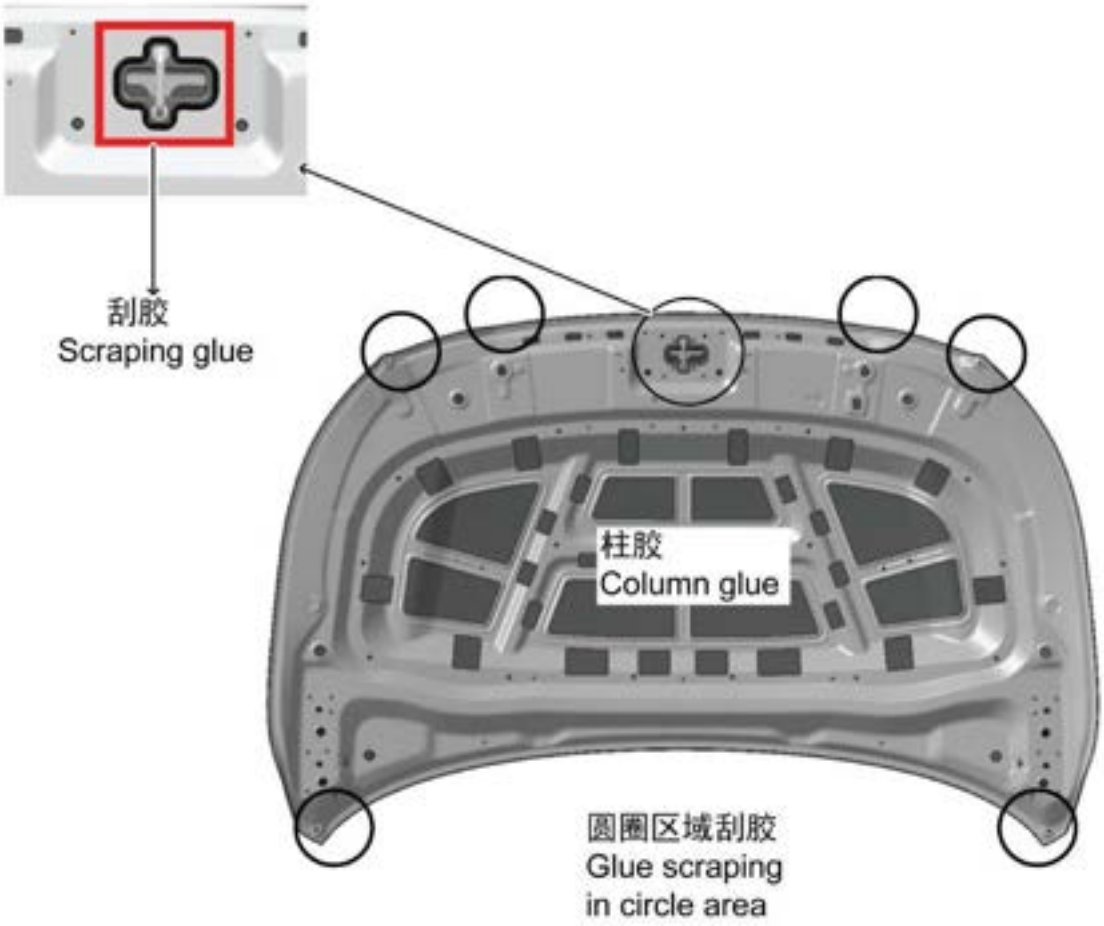
刮胶
Scraping glue
柱胶
Column glue
圆圈区域刮胶
Glue scraping
in circle area

Front Door

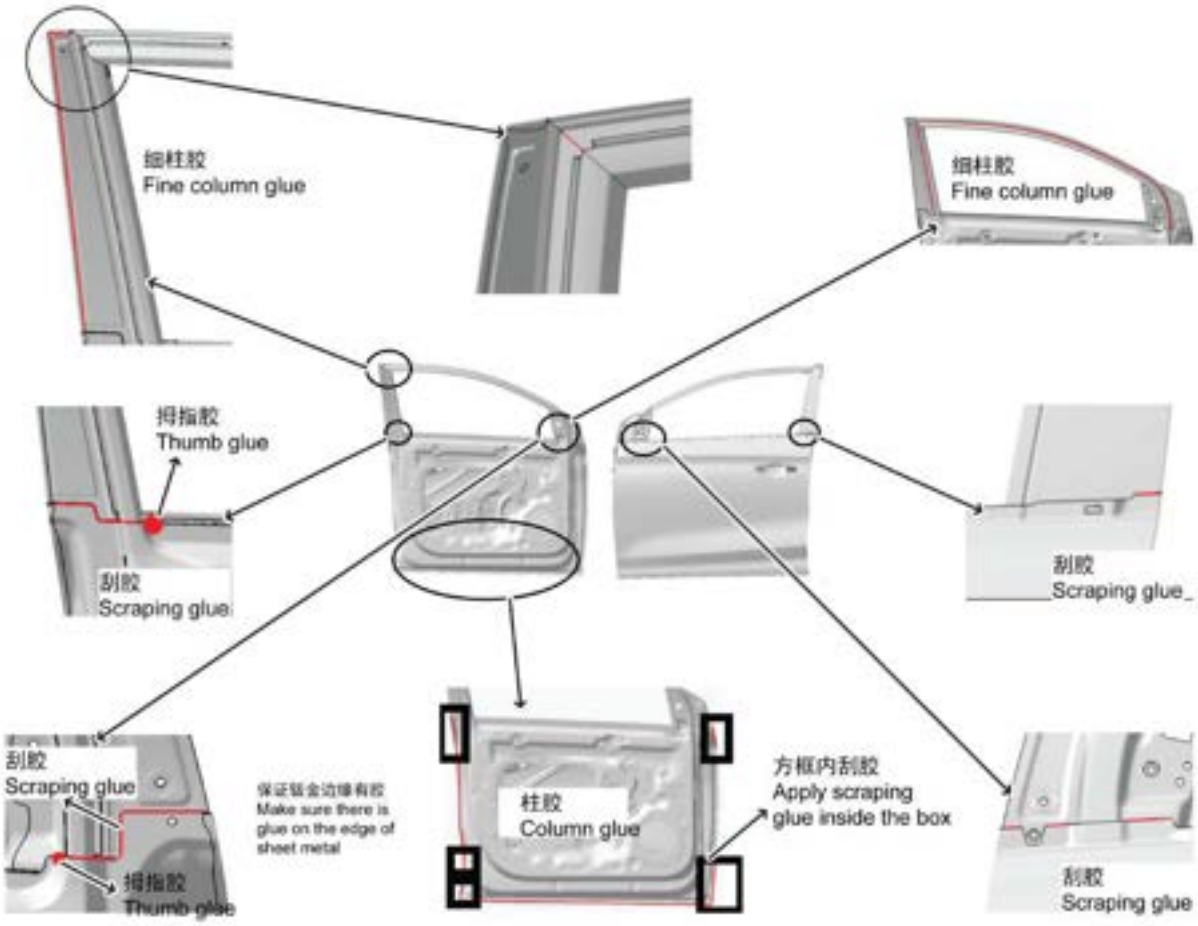
细柱胶
Fine column glue
细柱胶
Fine column glue
拇指胶
Thumb glue
刮胶
Scraping glue
刮胶
Scraping glue
刮胶
Scraping glue
拇指胶
Thumb glue
保证钣金边缘有胶
Make sure there is glue on the edge of sheet metal
柱胶
Column glue
方框内刮胶
Apply scraping glue inside the box
刮胶
Scraping glue

Rear Door

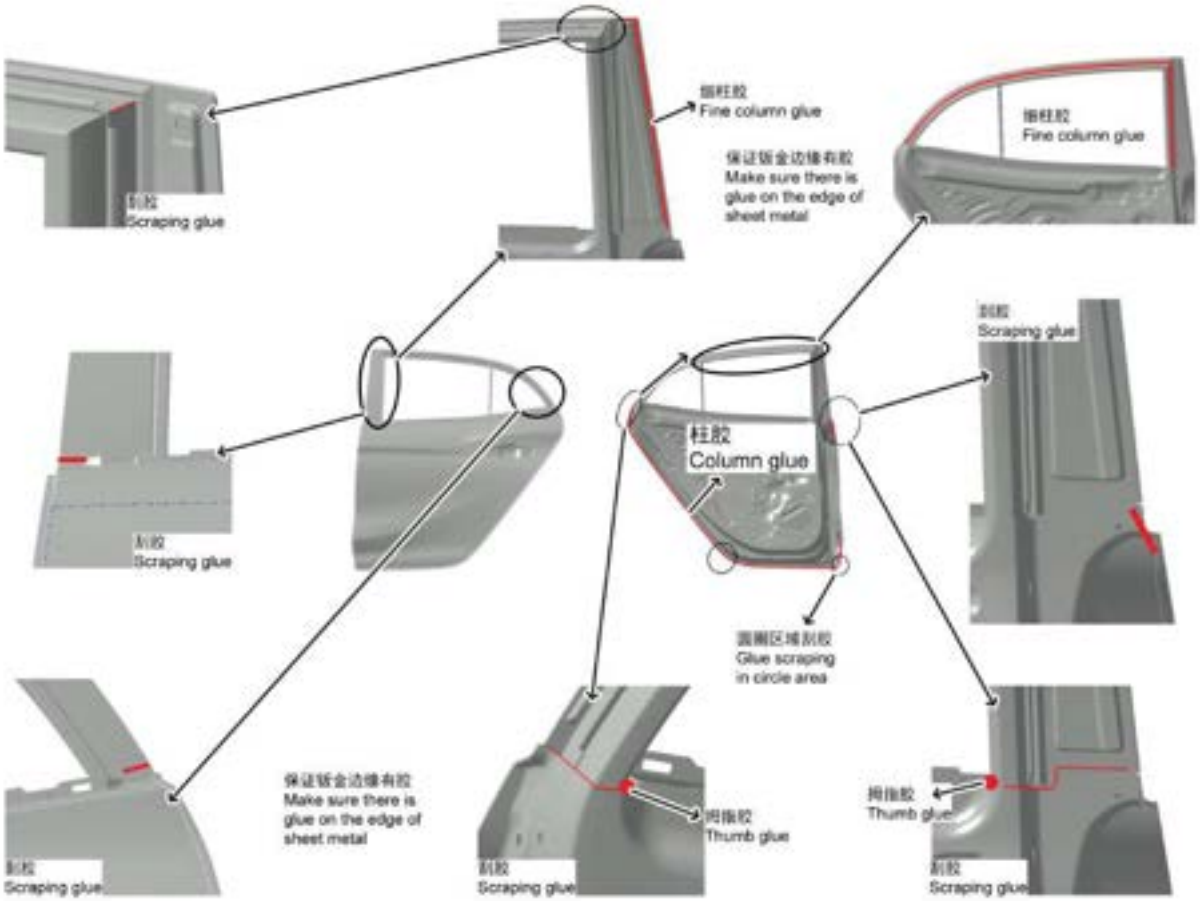
Fine column glue
Fine column glue
Make sure there is glue on the edge of sheet metal
Scraping glue
Scraping glue
Scraping glue
Column glue
Glue scraping in circle area
Make sure there is glue on the edge of sheet metal
Thumb glue
Thumb glue
Scraping glue
Scraping glue
Scraping glue

Tailgate

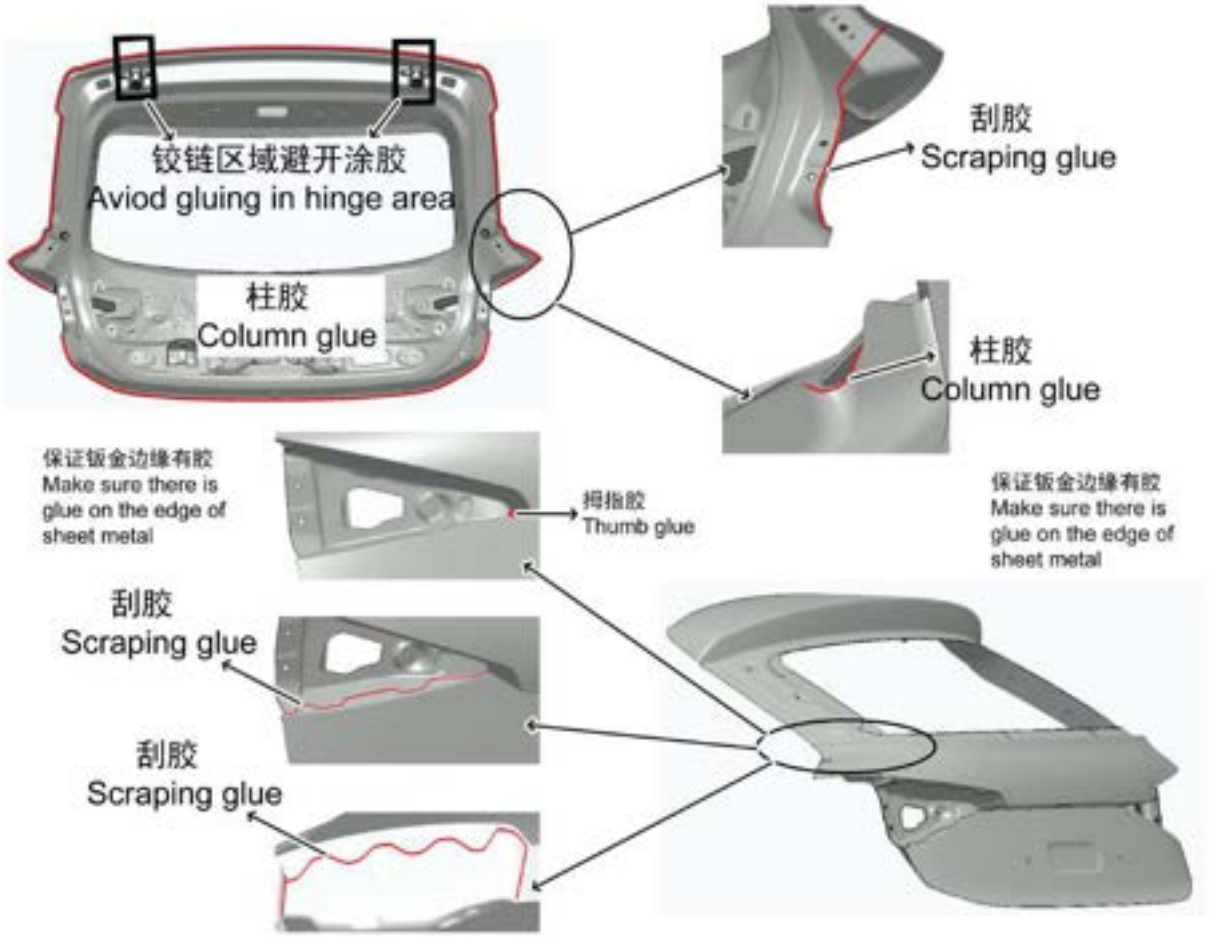
铰链区域避开涂胶
Aviod gluing in hinge area
柱胶
Column glue
刮胶
Scraping glue
柱胶
Column glue
保证钣金边缘有胶
Make sure there is glue on the edge of sheet metal
拇指胶
Thumb glue
保证钣金边缘有胶
Make sure there is glue on the edge of sheet metal
刮胶
Scraping glue
刮胶
Scraping glue

Position Information of Foam Parts

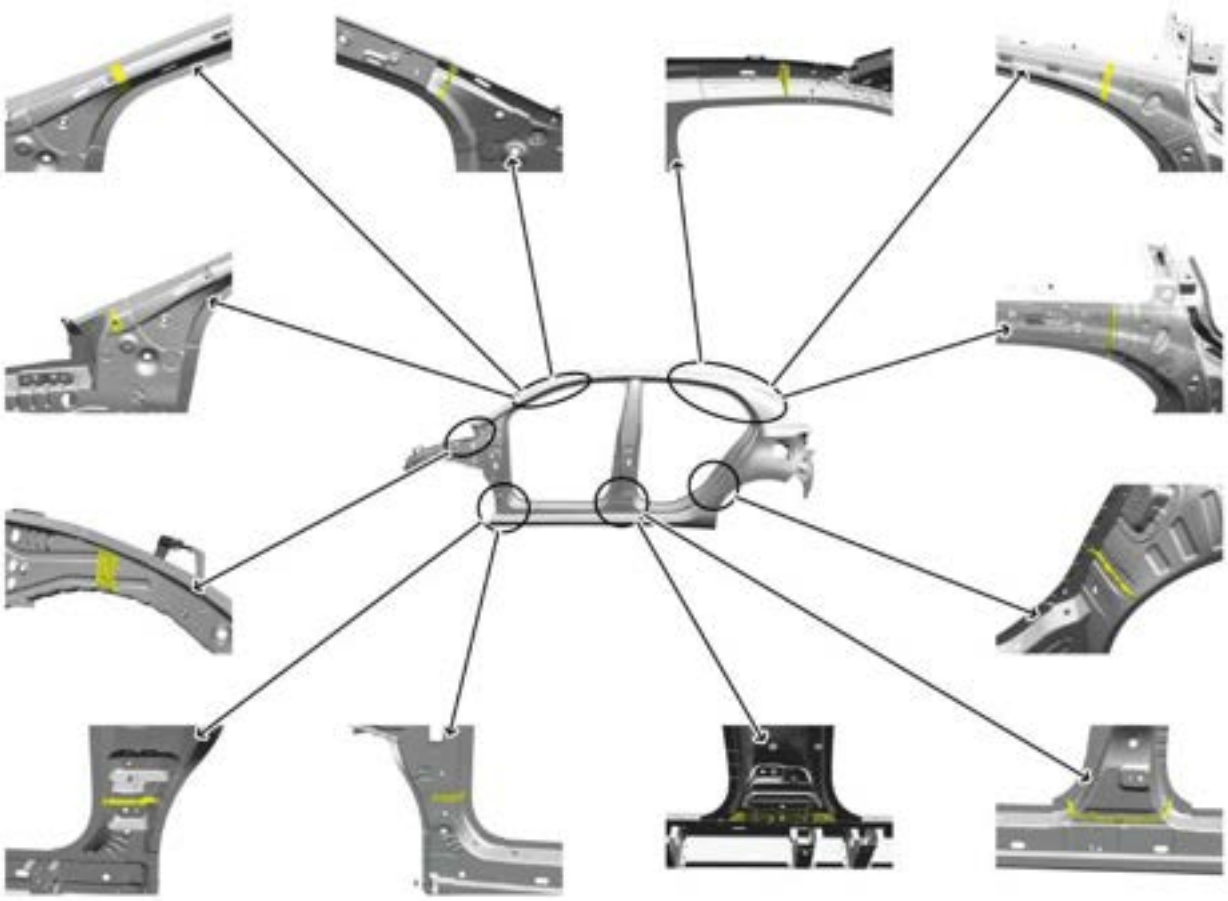

Gasket Position Information

Damping mats are used in the base plate, dash panel, rear end panel, rear wheelhouse and central passage. When making sheet metal repairs or replacements in these areas, tailor new gaskets according to the size of original ones and paste them as the following instructions:

- Clean the panel part to be pasted prior to pasting the new gasket.
- Follow the size requirements in the figure below.

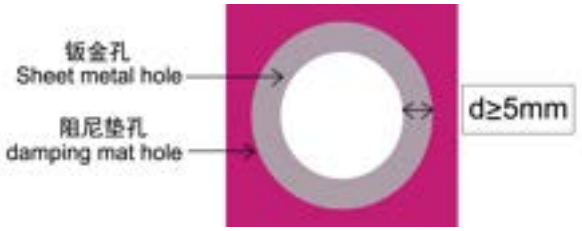

Gasket Pasting Position Information

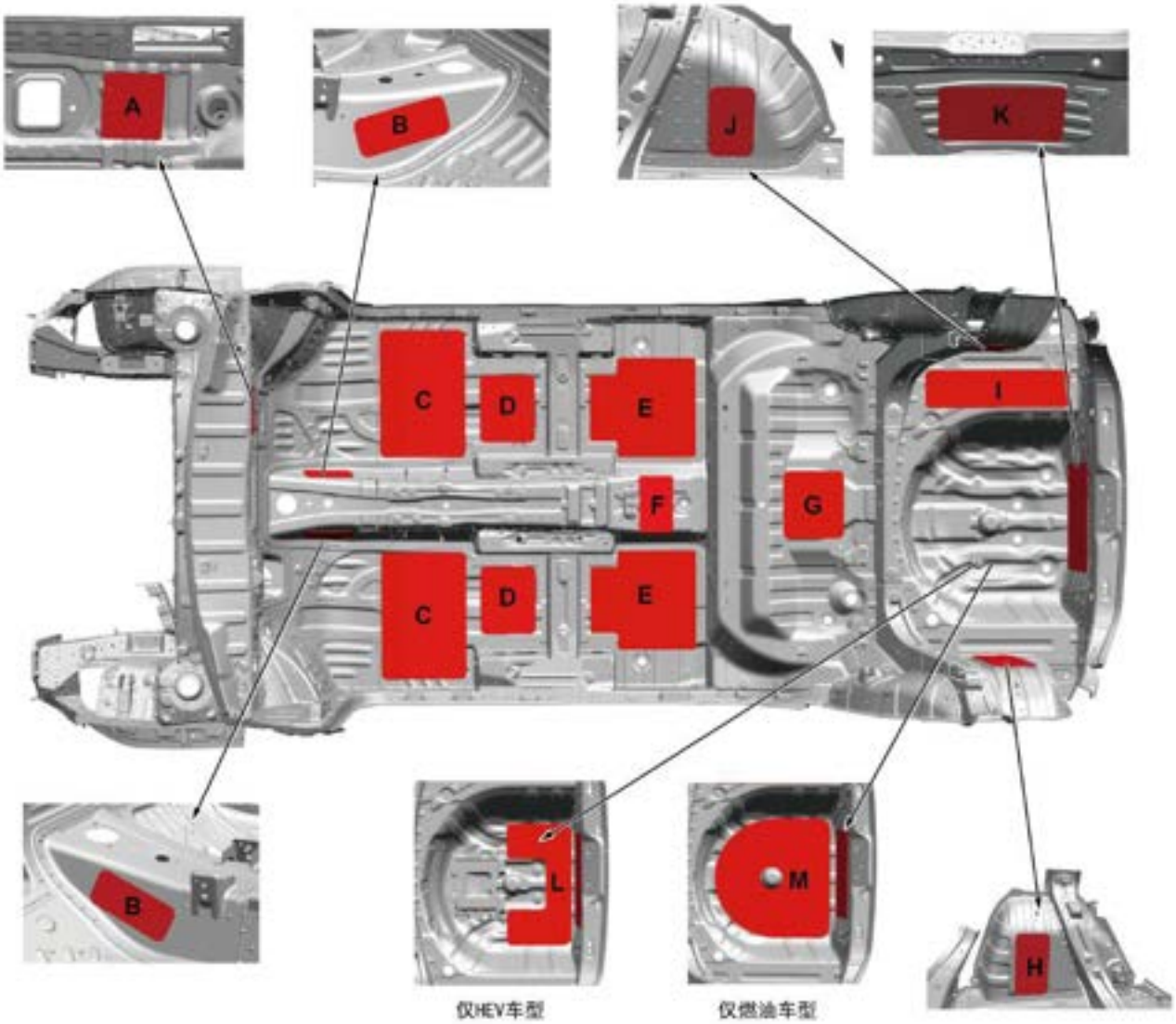

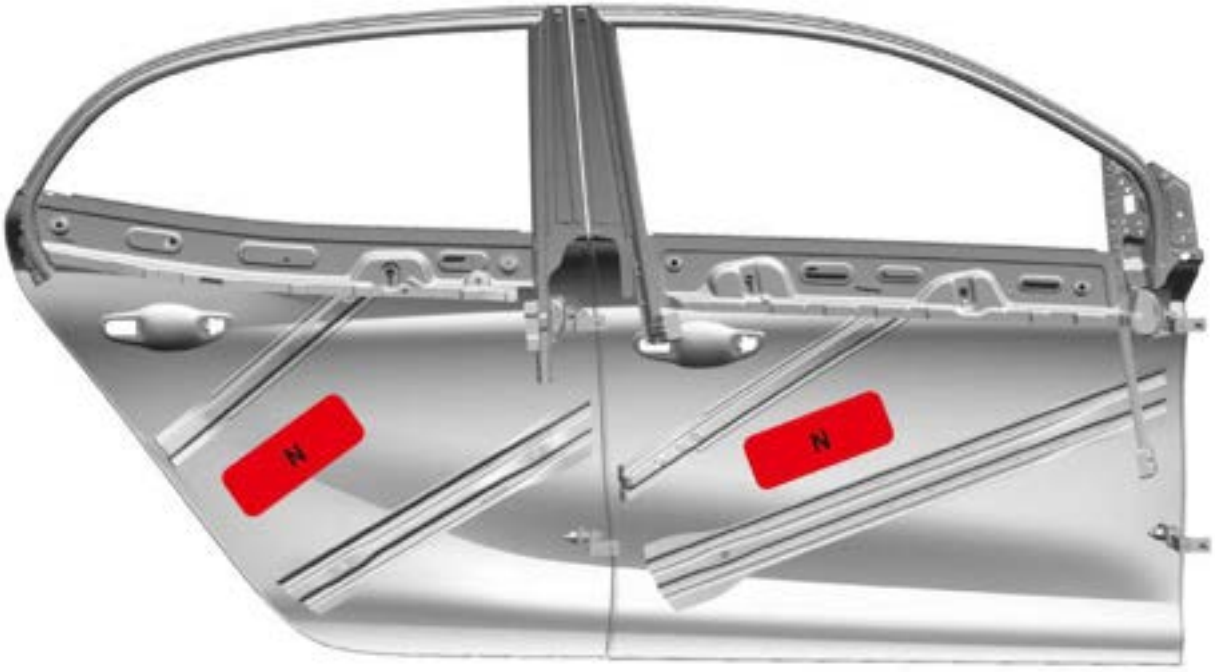
N
N

Gasket Size Information

A

B

C

D

E

F

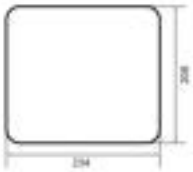

G

H

I

J

K

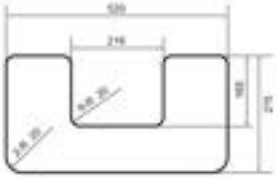

L

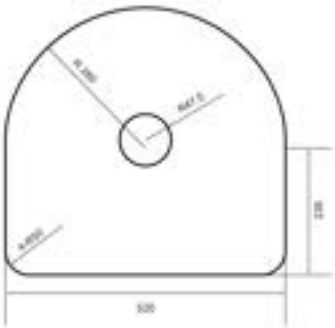

M

N

Anti Corrosion

Overview

Factory Treatments

During production, vehicle bodies are treated with the following anti-corrosion materials:

- Galvanized steel plates are used;
- Dipping and electrophoresis of phosphate antirust primer;
- Stone crash protection coating.
- A coating of underbody protection which is sprayed onto the underside of the main floor, rear floor and the rear wheel arches;
- An application of cavity wax which is sprayed into the sill panels, bodyside extensions and the lower areas of the door panels;
- A coat of protective wax which is applied to areas of the wheel arch not covered by the wheelhouse.

Whenever body repairs are carried out, ensure the anti-corrosion materials in the affected area are repaired or renewed as necessary. Ensure the materials used for repairing are also the approved anti-corrosion materials.

Precautions During Body Repairs and Handling

Take care when handling the vehicle in the workshop. Underbody sealers, seam sealers, underbody wax and body panels may be damaged if the vehicle is carelessly lifted.

When fitting accessories, ensure that the vehicle's corrosion protection is not affected, either by breaking the protective coating or by introducing a moisture trap.

Do not screw self-tapping screws directly into body panels. Fit suitable plastic inserts to the body panel beforehand. Always ensure that the edges of holes drilled into panels, chassis members and other body parts are protected with a suitable zinc rich or acid etch primer, and follow with a protective wax coating brushed onto the surrounding area.

Do not attach painted metal surfaces of any accessory directly to the vehicle's bodywork unless suitably protected. Where metal faces are bolted together always interpose a suitable interface material such as weldable zinc rich primer or zinc tape.

Due to the high temperatures generated by steam cleaning equipment, there is a risk that certain trim components could be damaged and some adhesives and corrosion prevention materials softened or liquefied. Adjust the equipment so that the nozzle temperature does not exceed 90°C (194°F). Take care not to allow the steam nozzle to dwell on one area, and keep the nozzle at least 300 mm from panel surfaces.

Do not remove wax or lacquer from underbody or underbonnet areas during repairs. Should it be necessary to steam clean these areas, apply a new coating of wax or underbody protection as soon as possible.

Inspection during Maintenance

Carry out the following operations to check bodywork for corrosion:

- With the vehicle lifted, carry out visual check of underbody sealer for damage.
- With the vehicle lowered, inspect exterior paintwork for damage and body panels for corrosion.

Note：If the vehicle to be inspected is dirty, it will need to be washed prior to body inspection.

The checks described above are intended to be visual only. It is not intended that the operator should remove trim panels or sound-deadening materials when checking the vehicle for corrosion and paint damage.

1. With the vehicle on a lift, and using an inspection or spot lamp, visually check for the following:

- Corrosion damage and damaged paintwork, condition of underbody sealer on front and rear lower panels, sills and wheel arches;
- Damage to underbody sealer. Corrosion in areas adjacent to suspension mountings and fuel tank fixings.

Caution：

Pay special attention to signs of damage caused to panels or corrosion protection material by incorrect jack positioning.

Warning：It is essential to follow the correct jacking and lifting procedures.

2. With the vehicle lowered, visually check for evidence of damage and corrosion on all visible painted areas, in particular the following:

- Front edge of bonnet.
- Visible flanges in engine compartment.
- Lower body and door panels.

Rectify any bodywork damage or evidence of corrosion found during inspection as soon as is practicable. These include minimising the extent of the damage and ensuring the long term effectiveness of the factory-applied corrosion prevention treatment. If the corroded area becomes clear, and diffused or expanded from the bottom of replaceable parts (such as: various trim panels, window glass, seats, etc.), you need to replace the parts, so as to achieve the most effective repair.

Underbody Protection Repairs

Whenever body repairs are carried out, ensure that full sealing and corrosion protection treatments are reinstated. This

applies both to the damaged areas and also to areas where protection has been indirectly impaired, as a result either of accident damage or repair operations.

Remove corrosion protection from the damaged area before straightening or repairing the panels. This applies in particular to panels coated with wax,PVC underbody sealer, sound deadening pads, etc.

Warning : DO NOT use oxy-acetylene gas equipment to remove anti-corrosion materials. Because these materials will release a lot of smoke and gas when burning.

Note : The device used for removing strong anti-corrosion sealant can provide several rates and efficiencies. The scraper (not pneumatic chisel) driven by compressed air provides a relatively quiet mechanical method by using a very rapid reciprocating motion. Move the operating edge of the tool along the workpiece surface to remove the sealing material.

The most common method of removal is by means of a hot air blower with integral scraper. One of the most efficient methods is the rapid cutting 'hot knife'. This tool uses a wide blade and is able to be used easily in profiled sections where access is otherwise difficult.

Use the following procedures when repairing underbody coatings:

1. Remove existing underbody coatings.
2. After panel repair, clean the affected area with a solvent wipe, and treat bare metal with an etch phosphate material.
3. Re-prime the affected area.

Caution : DO NOT apply underbody sealer directly to bare metal surfaces under any circumstances.

4. Replace all heat-fusible plugs which have been disturbed. Where such plugs do not use rubber grommets of equivalent size, ensure that they are embedded in sealer.
5. Mask all mounting faces after mechanical components, hoses and pipe clips on the underbody have been removed. Underbody sealer must be applied before such components are refitted.
6. Brush sealer into all exposed seams.
7. Spray the affected area with an approved service underbody sealer.
8. Remove masking from component mounting faces.

After refitting mechanical components, including hoses and pipes and other fixtures, mask the brake discs and apply a coat of approved underbody wax. The underbody wax must be reinstated following all repairs on the affected wheel arch panels. The wax is applied over paints and underbody sealers. Remove old underbody wax completely from a zone extending at least 200 mm beyond the area where new underbody sealer is to be applied.

Note : During repairs, for the areas requiring application of underbody protective wax and coating, be sure to carry out paint operations before applying protective wax.

Cavity Wax Injection

After repairs, always treat areas with an approved cavity wax. In addition, treat with cavity wax for all interior surfaces which have been disturbed during repairs, regardless of whether they have been treated in production or not. This includes all cavities and door interiors. It is permissible to drill extra holes for wax injection where necessary, provided these are not positioned in load-bearing members. Ensure that such holes are treated with a suitable zinc rich primer, brushed with wax and then sealed with a rubber grommet.

Before wax injection, ensure that the cavity to be treated is free from any contamination or foreign matter. Where necessary, clear out any debris using compressed air.

Ensure that cavity wax is applied AFTER the final paint process and BEFORE refitting any trim components.

During application, ensure that the wax covers all flange and seam areas and that it is adequately applied to all repaired areas of both new and existing panels.

It should be noted that new panel assemblies and complete body shells are supplied without wax injection treatment. Ensure that such treatment is carried out after repairs.

Effective cavity wax protection is vital. Always observe the following points:

- Complete all paint refinish operations before wax application.
- Clean body panel areas and blow-clean cavities if necessary before treatment.
- Maintain a temperature of 18°C (64°F) during application and drying.
- Check the spray pattern of injection equipment.
- Mask all areas not to be wax coated and which could be contaminated by wax overspray.
- Remove body fixings, such as seat belt retractors, if contamination is at all likely.
- Move door glasses to fully closed position before treating door interiors.
- Treat body areas normally covered by trim before refitting items.
- Check that body and door drain holes are clear after the protective wax has dried.
- Keep all equipment clean, especially wax injection nozzles.

Anti-corrosion Products and Processes

Equipment and Supplier

Cavity Wax Injection Equipment and Technology

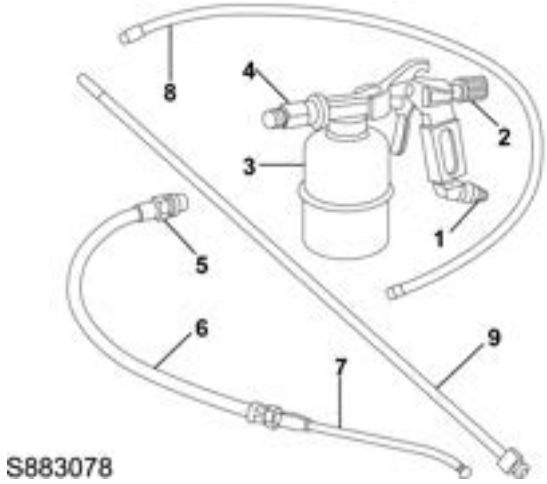

1. Air Inlet
2. Flow Control (by adjusting the spray mode)
3. Pressure Cup (with a capacity of 1 liter). Maximum Pressure 140 PSI (9.7 bar, 9.84 kg/cm3)
4. Spray Gun Connector
5. Spray Gun Tube-Nozzle Connection
6. Retractable Spray Gun Tube
7. Rigid directional hook rod (forward tapered spray mode)
8. Movable Nylon Spray Gun Tube (1,100 mm, 360° spray mode)
9. Rigid Spray Gun Tube (1,100 mm, 360° spray mode)

In the repair, if the wax-sprayed area is scratched, it need be re-processed. It is required to use the compressed air spray gun with an integral pressure cup and a replaceable spray gun tube.

It should be configured based on the additional equipment; during the use, the following points should be strictly observed:

- To process the coating area, use a rigid or movable spray gun for 360° spray to achieve maximum coverage;
- Where the opening is restricted, a hook-type nozzle should be employed to provide a more directional spray (such as the trunk with a narrow internal space or a short length);
- The wax will be directly sprayed from the smaller nozzle assembly of the spray gun onto the bottom surface to disconnect the liquid connection.

1,100mm rigid spray gun: the rigid spray gun nozzle will generate a 360° circular forward tapered spray. When the wax pattern is sprayed through a single stroke, the entire trunk surface will be affected; however, when it is sprayed from inside and outside by a spray gun, both the long straight structure and the trunk can be effectively and completely covered with wax film. By visual inspection, the rigid nozzle also provides the positioning accuracy required to process the molded parts.

Caution：Do not force the spray gun into the mouth of vessel to be sprayed when using this device.

1100 mm movable nylon nozzle: although the elastic nylon spray gun is similar to the rigid spray gun in style, it provides a stronger penetrability, which is ideal for bent parts or vessels to be sprayed that are not readily accessible for the nozzle. The main weakness of the elastic nylon spray gun lies in its inability of precise positioning to the inner space. When the spraying is carried out, outward spraying will be achieved under the action of the spray gun's stroke. Therefore, to pull out the spray gun, slow withdrawal will be required to guarantee the integrity of the spray that has been completed. It is inadvisable to pull out the spray gun too quickly. Make sure that the spray gun's nylon tube is connected into the hole while kept away from the edge to avoid wear of the nylon tube and to prolong its service life. It is required to make sure that the spray has been stopped before the nozzle is pulled out of the access port. To assist in the completion of this step, apply red paint to the last 30mm of the rear end of the nozzle.

Movable Spray Gun with Hook-type Nozzle

The spray gun with a rigid hook-type nozzle will produce a forward spray effect, whose full tapered spray mode is featured by long range and good dispersity. The combination of these two features can produce a good directivity, which thus can either be applied to the short and narrow area to be sprayed, or to the direct spraying of inner wheel arch and other scenarios.

In use, place the smooth area at the end of the spray gun to constitute a spraying angle of 180° with the position sprayed by the nozzle. In this way, when the area to be sprayed is hidden in a box section or enters into a hole, it will help to guide the spraying completed more accurately.

For general spraying, the nozzle should be moved from one end to the other in an arched manner as required to ensure that the surface will be fully sprayed.

Note：Always clean the spray gun with appropriate solvent after spraying to maintain working efficiency.

Recommended Equipment

3M body Schuetz pistol spray gun 08996: Composed of casing and light alloy, pistol spray gun in collaboration with 3M screws will be fitted on the body's Schuetz container.

3M pneumatic shell gun-like spray gun 08012: Direct feed pneumatic lance is applied to 3M cartridge products. Its excellent performance lies in the ease for spraying; meanwhile, it is equipped with a control valve for extra control.

3M pneumatic machine-gun-like spray gun - 08006/7: direct feed pneumatic lance is used for 3M bagged sealed products

(the lance numbered as 08006 is suitable for the bagged products of 200ml and 310ml to be sprayed; the lance numbered as 08007 is suitable for various models of bagged products to be sprayed, including the product of 600ml to be sprayed).

Other usable spray guns: heavy pistol gun 08013.

3M glue gun 08190: this model of spray gun is suitable for the structural gluing 08120 of 3M.

3M cavity wax pattern glue gun 08997: This device can carry a loading tank of 1 liter and is equipped with a hose with a length of 750 mm. The approval system can be obtained from all 3M surface refinishing coefficients. Cooper Pegler Falcon primary pneumatic spray gun (airtight): this pneumatic sprayer is mainly used to spray the transit wax; equipped with a container of 5 liters that is attached with a complete hand pump, it can carry out effective wax spraying with no compressed air or extra operation required. The use of nozzle, spray gun, hose, and a trigger valve with a complete filter can make the application more convenient and flexible. Other applications include general maintenance, wax spraying and paint spraying. Heavy-duty materials may be used. All parts are fully replaceable and can be configured with various nozzles.

SATA Schuetz gun model UBE: SATA Schuetz gun is used to reprocess the lower part of the vehicle coated with protective paint; the gun is placed in a one-way dedicated one-liter container. The threaded fittings (the gun with internal thread) meet the criteria for most of the Schuetz type packages

Specification of the model UBE:	
Air consumption	7 ft3/min (200 litres/ min) @ 45 lbf.in2
Weight:	23.3 oz (220 grams)

SATA HKD1 wax injection equipment: this equipment is used for reprocessing of cavity wax. SATA HKD1 unit consists of the following parts: high quality forging, a gun with a pressure feed vessel of 1 liter, a retractable nylon spray gun, a steel pipe with a length of 1,100 mm, and a hook-shaped rod tube. As a rapid changeover connector for standard fittings, it can facilitate re-connection of the tube instrument. Each spray gun has a complete processing nozzle featured by dedicated spraying to adapt to the type of trunk to be handled.

Note：Always clean the spray gun with appropriate solvent after spraying to maintain working efficiency.

Contact Information of 3M Supplier

3M (China) Limited

Address: 38F, Maxdo Center, No.8 Xingyi Road, Shanghai, China

Postal code: 200336

Tel.: 86-21-62753535

Website: www.3M.com

Zinc Spray

For any area where metal inert-gas welding (MIG)/metal active-gas welding (MAG) or spot welding is required, the section near the joint surface should be sprayed with the zinc-rich primer while that to be welded should be left alone.

The zinc spray is commonly used in the following two situations:

- The damaged cutting surface or coating of the panel requires zinc spraying;
- The welding contact surface requires zinc spraying to prevent rustiness of the spot welding.

Cavity Protection Wax

Application Process of Cavity Wax

Application Tool:

- Pressurized spray gun with tank;
- Hook-liked probe;
- Flexible/semi-rigid nylon probe;
- Rubber plug;

Application Information of Cavity Protection Wax

Door Sill

Underbody Sealer

Functions of Underbody Sealer:

- Improve the anti-chip performance of the underbody;
- Improve the anti-corrosion performance of the underbody panel;
- Improve the sealing performance of the underbody panel crack;
- Improve the sound insulation performance of the underbody.

Caution：Ensure that suspension units, wheels, tyres, power unit, exhaust system and brake system (including all mounting points) are covered prior to application of new underbody sealer.

Construction Steps of Underbody Sealer:

1. Cleaning: to ensure maximum viscosity of the product, it is required to thoroughly clean the surface of the body bottom to remove dirt, oil, grease or waxy residue.
2. Check: before starting, it is required to thoroughly check the body bottom to confirm whether there is any potential damage or rusty area. The key parts include: wheel arch, door sill, seam, and lap joint.
3. Dust remove: use a small shovel or wire brush to remove all the rust spots on the body bottom. Special attention should be paid to the hard-to-reach places, such as wheel frame, overlapped joints, or seams.
4. Check the coating type of the body bottom: check which coating type of the body bottom is used to select an appropriate product.
5. Read the instructions for use: before starting work, please read the operating instructions on the product packaging and view the technical data sheet. Read the safety instructions in the material safety data sheet carefully to minimize potential risks and hazards and to achieve the possible optimal effect.
6. Use the cross spraying technology: spray the anti-rust protection product at a distance of approximately 30cm; conduct spraying along the horizontal direction first, and then spray the floor board stiffener at a suitable angle (cross spraying technology). At least three times of spraying can bring about the optimal wet film thickness of 1.5mm.
7. Drying time: a specific drying time is required to make the coating material tightly and permanently attached to the body bottom. The drying time will vary with the type of

the solution and the thickness of the coating. The drying time for the product containing high volatile solvent will at least last for 2 hours.

8. Spray gun cleaning: clean the spray gun with a dedicated detergent immediately after the completion of the operation.

Welding Process

Overview of Welding Methods

Welding Process Characteristics:

- Not restricted by shape, it is suitable for connecting integral body structure, which, after being welded, can still maintain its intactness;
- With no adapting piece needed, it can reduce the weight;
- Outstanding sealing performance against air and water;
- High productivity;
- Strength of the welded joint will be affected by the operator's technical level;
- In case of overheating, the surrounding panels will be deformed.

Generally, GMAW, resistance spot welding and brazing are adopted for the body welding of modern automobiles. When the panel should be welded for repair, based on specific conditions, it is required to adopt an optimal welding method that will not reduce original strength and durability of the body; it is advisable to use spot welding or inert-gas welding where possible.

Gas Metal Arc Welding (GMAW)

GMAW is mainly used to weld high-strength and low-alloy steel bodies and cast aluminum parts. The advantages include:

- The operation method is easy to be mastered;
- It can 100% melt a variety of base metals; when being applied to a thin metal, it can use weak current to reduce the damage to the strength of adjacent parts;
- The arc is stable and easy to be controlled;
- It is suitable for welding of parts with gaps and mismatches;
- Able to control the welding temperature and duration, it can shorten heating time of the welded zone, thus reducing fatigue and deformation of the base metal.

Typical welding positions and welding methods:

- Butt welding. Mount two adjacent metal edges together, and then conduct welding along the edge of the two metal plates mated or butted with each other;
- Overlap welding. Weld two metal plates overlapped with each other;
- Plug welding. Punch a hole in one or several workpieces outside to make the arc access the workpiece inside through the hole that then will be filled with molten metal;
- Spot welding. When the timing pulse for wire feeding is triggered, the current will be introduced into the two metal plates to be welded.

Resistance Spot Welding

As the most commonly used method for welding of the integral body, resistance spot welding is suitable for thin steel plates of the body requiring high welding strength with no deformation caused. Roof, door window, door sill plate, external components, etc. The welding quality of the resistance spot welding will be affected by the voltage, current, pressurized time, thickness of the welded metal plate, and other related factors, which are expounded as follows:

- Material and degree of cleanliness of the weldment: both the contact points between two weldments and between the weldment and the electrode should be carefully polished clean;
- Electrode pressing force: if the pressure is insufficient, welding spatter will be caused at the contact point; if the pressure is excessive, although the current flowing through is large, owing to the enlarged heat distribution area, the welding spot diameter and weld penetration will become smaller instead;
- Welding current: both welding spot diameter and welding strength will be increased with the increase of welding current; however, when the current is excessive but the pressure is insufficient, the welding spatter will also be caused between the plates, whereas it may be minimized;
- Power-on duration: the effects exerted by long power-on duration on the welding spot include abundant heat generated, large welding spot, and deep weld penetration. However, if the power-on duration is excessively prolonged, electrode indentation and thermal deformation will be caused instead of increased welding spot;
- Arrangement of welding spot: both spacing and margin (the distance from the welding spot to the plate edge) of the welding spot will also impose a decisive effect on the strength of the welding spot. Although shortening spacing of the welding spot can improve the connection strength of the weldment, in fact, there is a limit, because when the spacing exceeds a certain limit, the welding current will be diverted and leaked through the last welding spot; at this point, the increased welding spot will lose its effect to enhance the connection strength of the weldment, but will lead to just the opposite; therefore, spacing of the welding spot should step outside leakage area of the current.

The use of resistance spot welding method requires a correct welding sequence; generally, the spot welding should not be conducted continuously along a single direction; when the electrode head goes hot and changes its color, the welding should be stopped immediately for cooling. Do not weld any edge at the corner, so as to prevent cracking caused by stress concentration.

Aluminum Welding

With the use of new materials, many vehicle panels are made of aluminum which is more difficult to be repaired as compared to steel. Aluminum is softer than steel and is more difficult to be processed and formed after being subject to work hardening, and is easily deformed after heating. The thickness of aluminum body and vehicle structure is usually as 1.5-2.0 times as that of the steel parts, so during processing of aluminum panels, pay attention to the following points:

Align the aluminum panel.

Aluminum material is highly extensible and can hardly be restored to its original shape or size after being collided. During repair, use wooden hammer or rubber hammer to perform roller hammer misplaced strike, so as to reduce extension of aluminum material. If it is necessary to perform roller hammer positive-position strike, strike gently for many times; otherwise, it will worsen the damage degree of aluminum materials. Prior to aluminum plate repair, distinguish the category of deformation: flexibly strike the protruding parts with wooden hammer or rubber hammer to release the stress generated by collision, so as to reduce the likelihood of bending at the hard brake part; for repair of depressed part, avoid stretching the aluminum plate instead of raising too much each time of repair. For aluminum panel repair, you can also use aluminum shaper to level the damaged part. After completion of repair, use spacial tool to cut down the entire Meson welding screw and polish evenly. For steel body, when the panel and inner structure are deformed at the same time, separately repair the inner and the outer layer, and then articulate the folding edge. But for aluminum panel, this method does not apply. If using this method to repair the aluminum panel, the folding part will crack or fracture due to low aluminum toughness.

If using heat shrinkage method to calibrate the aluminum plate, keep in mind the major differences between steel plate calibration and aluminum plate calibration: for steel plate, avoid heating as much as possible so as to prevent the steel strength being reduced; for aluminum plate, restore the lowered plasticity during work hardening by heating. Without heating, the aluminum plate will crack when the calibration force is applied to the aluminum plate. Prior to calibration, heat the damaged aluminum plate with welding torch. As aluminum does not change color at high temperature, it is likely to be overheated. In this case, the thermal coating or thermal pen that changes color at the temperature of 120°C can be used to control the temperature.

When the aluminum plate extends, it can be treated with the method of heat shrinkage. During operation, slowly cool the contracted part instead of cooling it down rapidly, so as to avoid plate deformation due to excess shrinkage. In addition, during repair of aluminum plate, do not use the shrinking hammer or shrinking shim plate that are used to repair steel body, so as to avoid crack of the damaged part.

Aluminum Plate Welding

In normal cases, alloy aluminum can be welded with the method of inert-gas welding. But, because of the annealing effect in welding process, there is a great loss of strength at the welding part. After repair, the welding part will crack due to vehicle vibration and bumpy driving. So, welding is rarely applied to aluminum body repair, and bonding and riveting are normally used instead. Nevertheless, welding is not an unnecessary process during aluminum body repair. During replacement of structural parts, welding is generally used between structural parts so as to strengthen the completeness and conductivity of the vehicle.

For aluminum plate welding instead of steel plate welding, pay attention to the following points:

- During aluminum plate welding, the wire feed speed is higher and more stable, and by using aluminum welding wire and 100% argon, the amount of airflow increases about 50% as compared to steel body welding.
- During aluminum plate welding, the welding torch should be more closer to the vertical position, and the welding direction can only be tilted from the vertical direction by 5-15°;
- Use the positive-direction welding method without pull, only push is allowed. For vertical welding, weld from the bottom up;
- During aluminum plate welding, the amount of protective air increases about 50%, and there are more splashes, so apply anti-splash agent to the nozzle and the conductive steel nozzle;
- The distance between the conductive copper nozzle and the workpiece is generally within the range of 7-14mm.

Repair through Tin Welding

For curved shape partially unrepairable or difficult to repair, use tin welding to fill the part to be repaired into curved shape. Prior to tin welding, apply tin welding paste to the repair welding surface, toast the panel surface with the welding torch flame, melt the welded tin, and weld it to the surface to be repaired at a thickness determined by the curved surface, so as to make the surface restore to its original shape after welding. After tin welding repair, the surface tend not to be perfect enough. In this case, use grinding wheel and sand paper to polish it until it bend smoothly.

Welding Protection Measures

Electronic Control Unit

The Electronic Control Unit (ECU) fitted to the vehicle makes it advisable to follow suitable precautions prior to carrying out welding repair operations. Harsh conditions of heat and vibration may be generated during these operations which could cause damage to the units.

In particular, it is essential to follow the appropriate precautions when disconnecting or removing the sensing and diagnostic module (SDM).

Supplementary Restraint System Precautions

Any work undertaken which involves the removal or replacement of any item of theSRS , requires extreme caution and adherence to the appropriate precautions.

Equipment

Prior to commencing any test procedure on the vehicle, ensure that the relevant test equipment is working correctly and any harness or connectors are in good condition. This particularly applies to electronic control units.

Seat Belt Anchorages

Seat belt anchorages are safety critical. When making repairs in these areas, it is essential to follow design specifications. IMPORTANT: High Strength Low Alloy (HSLA) steel may be used for seat belt anchorages.

Where possible, the original production assembly should be used, complete with its seat belt anchorages, or the cut line should be so arranged that the original seat belt anchorage is not disturbed.

All welds within 250 mm of seat belt anchorages must be carefully checked for weld quality, including spacing of spot welds.

Welding Parts Remove

1. Expose resistance spot welds. For those spot welds which are not obviously visible, use a rotary drum sander or wire brush fitted to an air drill, or alternatively a hand held wire brush.

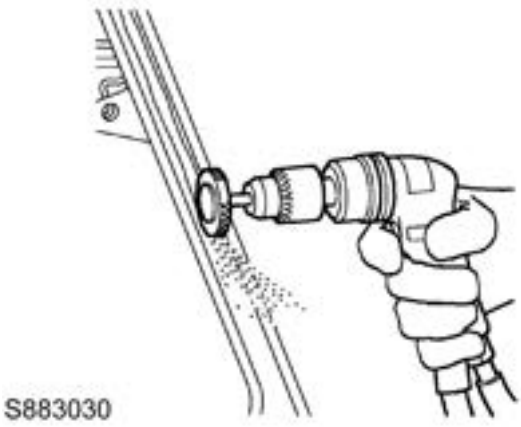

Caution : In wheel arch areas, it may be necessary to soften underbody coating, using a hot air gun, prior to exposing spot welds.

2. Cut out welding spots using a cobalt drill or a clamp-type spot weld remover.

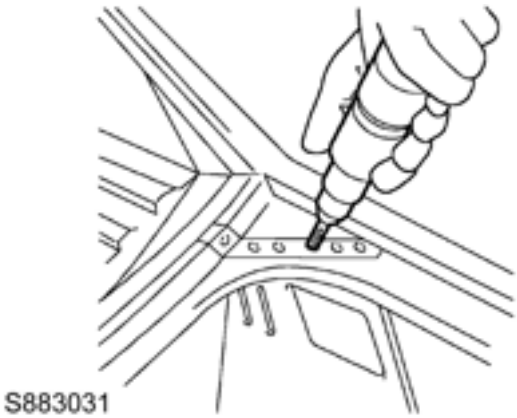

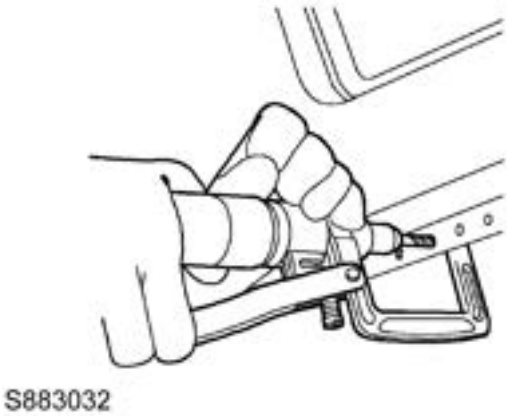

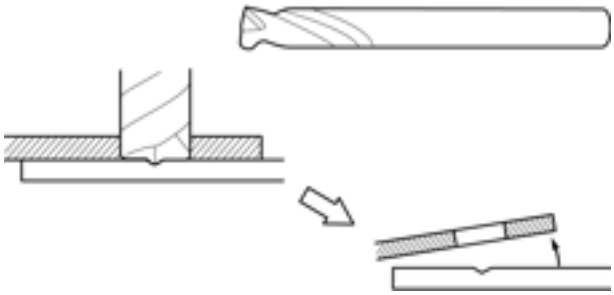

3. Laser weld parts: grind with grinder and grinding disc.

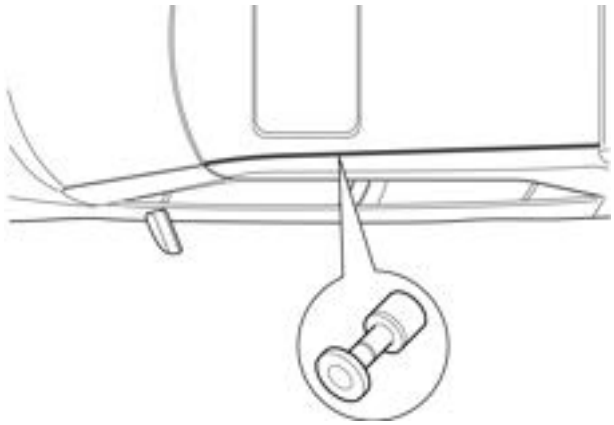

4. CO2-MAG Arc Weld Parts

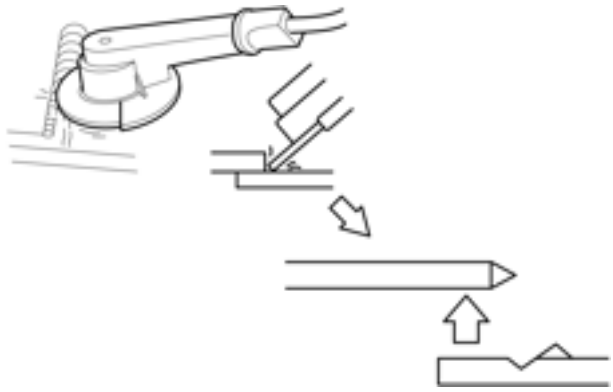

5. Rivet Joint Parts

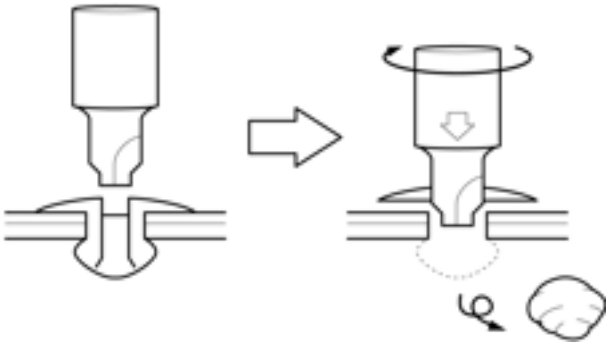

6. Large Panel Cut
   a. Cut Using Steel Plate Edge

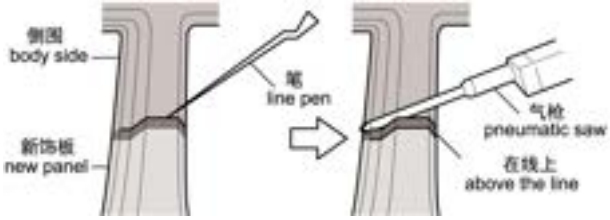

b. Plastic Sample Plate Cutting Method

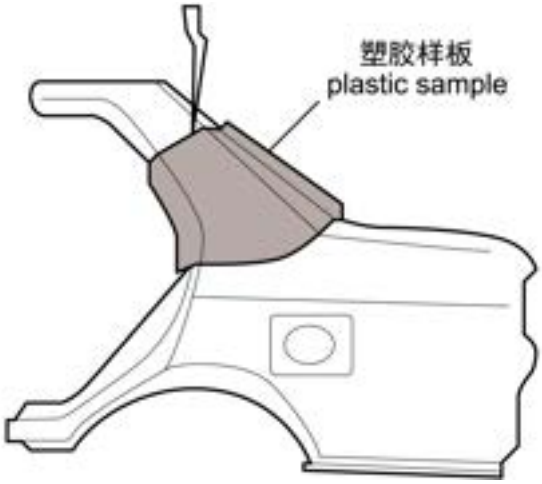

c. Dimension Measurement Method

d. Overlap Cutting Method

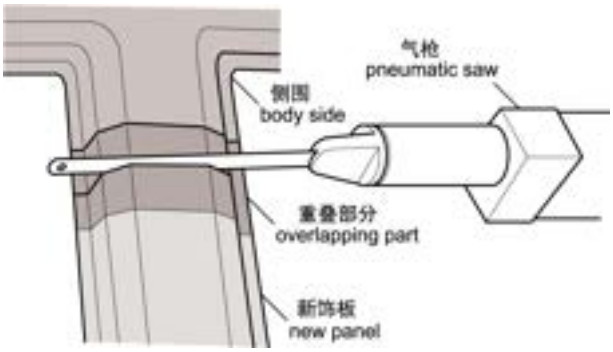

Caution : Before cutting out the large panel, a sander shall be used to remove MIG welds and braze at certain panel joints.

7. Separate spot welded joints and remove panel remnants using hammer, bolster chisel and pincers.

Laser Welded Roof Repair

Roof Remove

1. Remove the accessories around the roof.

   Before removing the roof, remove necessary peripheral accessories, including front and rear windscreens, interior trim panels, sunroof, ceilings, curtain airbags, etc. Before removing, disconnect the negative battery cable for two minutes.

2. Knock out the welding spots between the roof and the beam.

   Use an electric hand drill to drill out the original welding points of the roof on the upper part of the front and rear windscreens, so as to separate the roof from the body beam.

3. Remove the bonding between the roof and the roof beam.

   Remove the bonding between the roof and the roof beam with a cutting disk.

4. Cut and remove the old roof.

   Before cutting, it needs to drill a hole on the roof to facilitate cutting. Use a pneumatic saw to cut the old car roof, and then remove the whole old roof.

Roof Refit

1. Roof position measurement.

   To fit a new roof, first measure and position it according to the actual standard of body size.

2. Grind and clean the roof bonding area.

   As bare steel plates are required for structural adhesive bonding, before applying structural adhesive, it needs to use a grinder to polish the adhesive positions of the roof and both bodysides, and remove the paint in the area coated with structural adhesive (the position A of structural adhesive is marked in the figure below) to ensure the strength of structural adhesive, and clean the adhesive areas with cleaning agents. The position B in the figure shows the application position of sheet metal sealant.

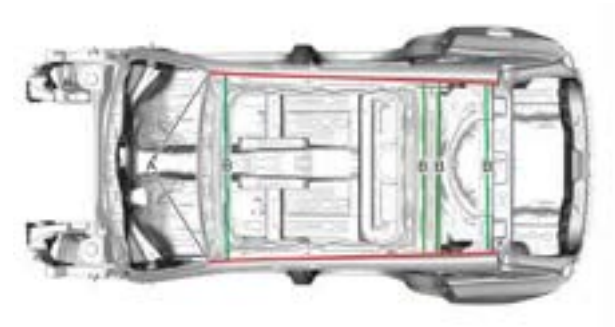

3. Apply glue on the roof.

   Apply the sheet metal sealant to the roof beam.

   Apply the two-component structural adhesive for sheet metal bonding on the edge of the roof (position A in the following figure), and squeeze out about 5g structural adhesive before use to ensure that the structural adhesive is mixed evenly.

   Before applying the structural adhesive, stick adhesive tapes on the paint surface of roof and the bodyside to prevent the adhesive from overflowing and sticking to the paint surface.

   After applying the structural adhesive, use a plastic scraper to evenly spread the adhesive overflowing from the roof joint, and repair the appearance.

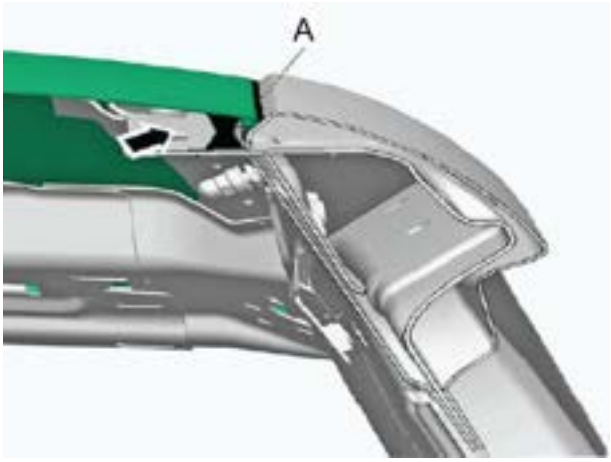

4. Fix the bonded roof.

   Fix and stick the two sides of the roof with straps, snap and fix 4 corners of the roof with lock wrenches until the structural adhesive is dry, and then remove the straps and lock wrenches.

5. Heat treatment of bonded roof.

   When the indoor temperature is lower than 20 °C, the structural adhesive must be heated by infrared oven lamp before it can be hardened; Or move the vehicle to the paint baking room for baking.

   Note that the temperature shall not be higher than 60 °C during heating

If the indoor temperature is higher than 20°C, after applying the structural adhesive, the vehicle needs to be placed statically for 36 hours without heating.

6. Weld the front/rear end of roof and beams.

   Use CO2 welding to weld the edges of front and rear windscreens of roof (figure A below) and polish them.

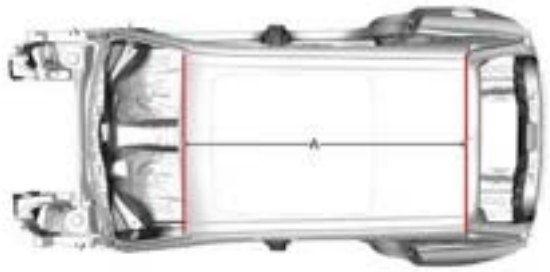

OEM Welding Information

Welding identification

●—2-layer welding

▲—3-layer welding

■—4-layer welding

▬—MAG welding

Main component welding information

Front end area

structure

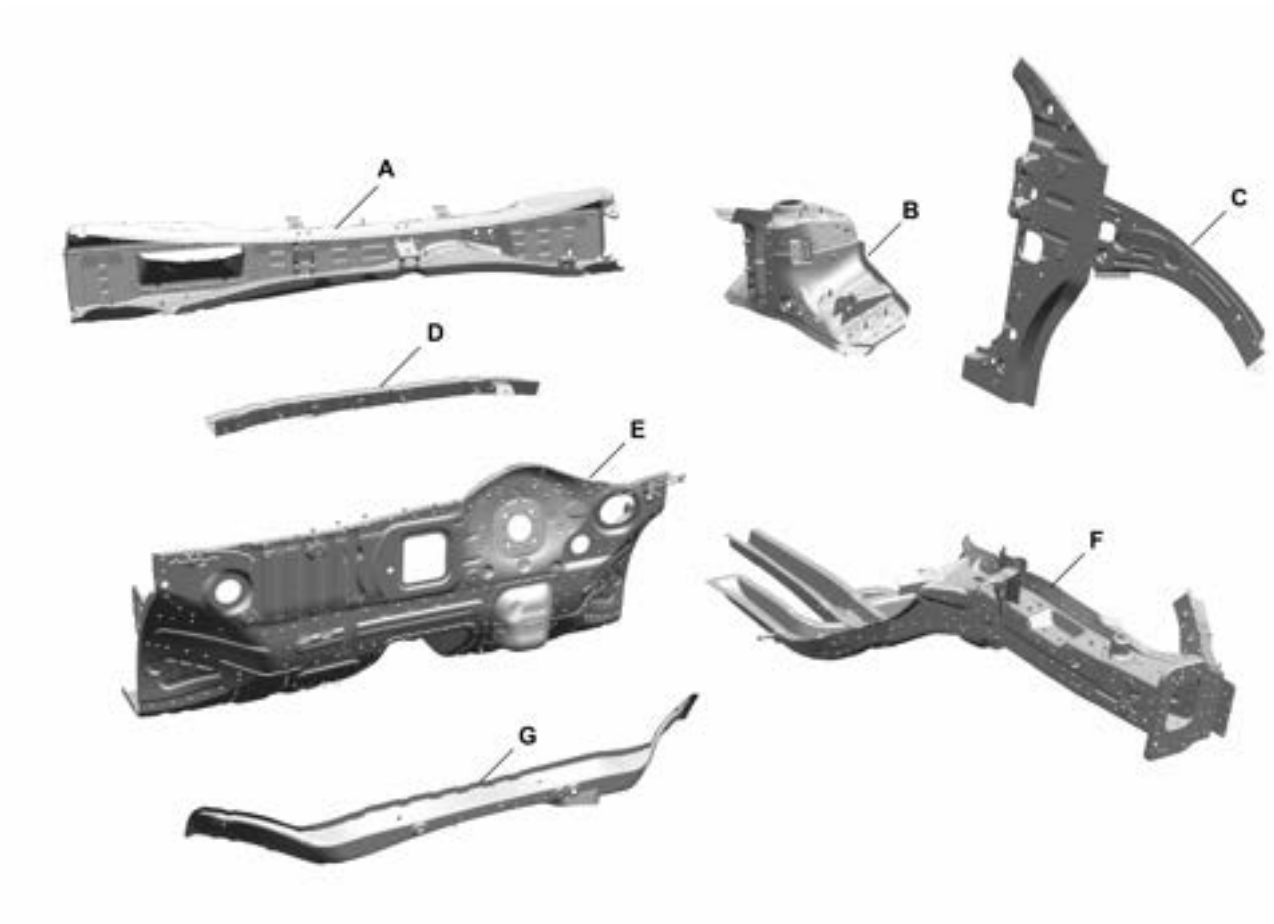

A-Ventilation panel assembly

B-Front wheel cover assembly

C-A pillar inner panel assembly

D-Front panel upper crossbeam reinforcement plate

E-Front panel assembly

F-Front longitudinal beam assembly

G-Front panel lower crossbeam assembly

1. From the A-pillar inner panel assembly to the front bumper assembly;

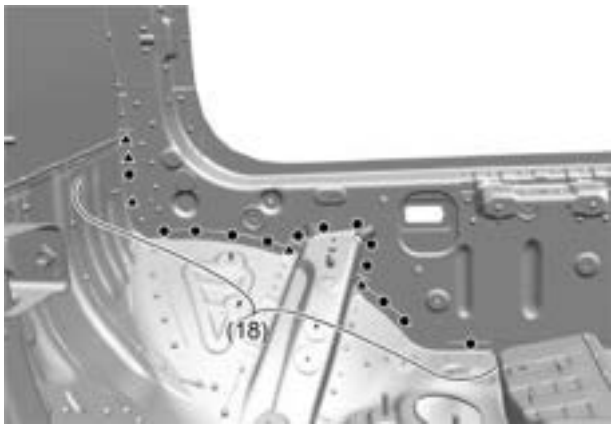

2. From the front longitudinal beam assembly to the front wheel housing assembly, and from the lower crossbeam assembly of the front bumper;

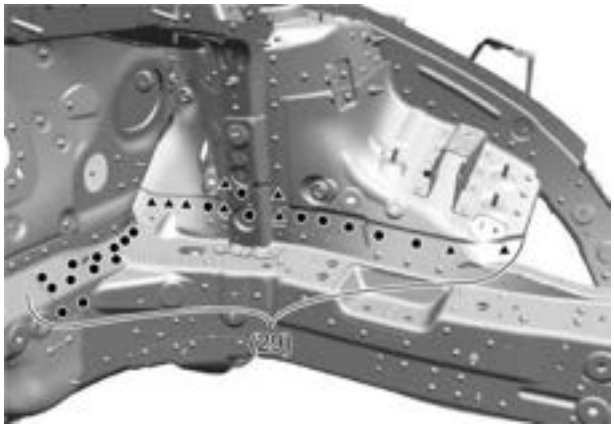

3. From the front longitudinal beam assembly to the front bumper assembly;

4. From the front longitudinal beam assembly to the front bumper assembly;

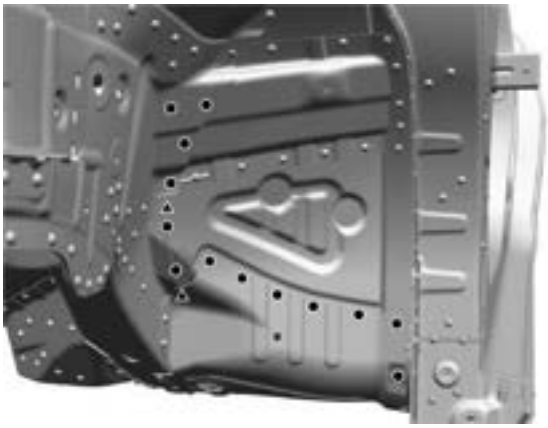

5. The reinforcement plate of the crossbeam on the front bumper to the ventilation panel assembly;

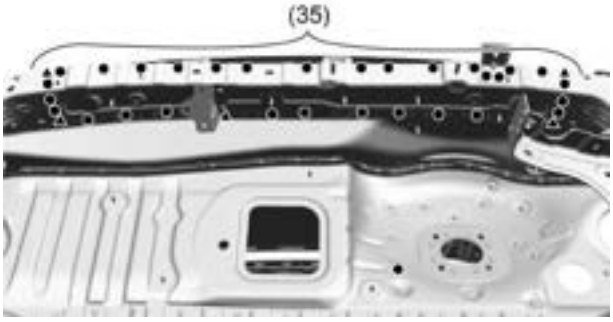

6. The front wheel housing assembly is connected to the reinforcement plate of the crossbeam on the front wall panel;

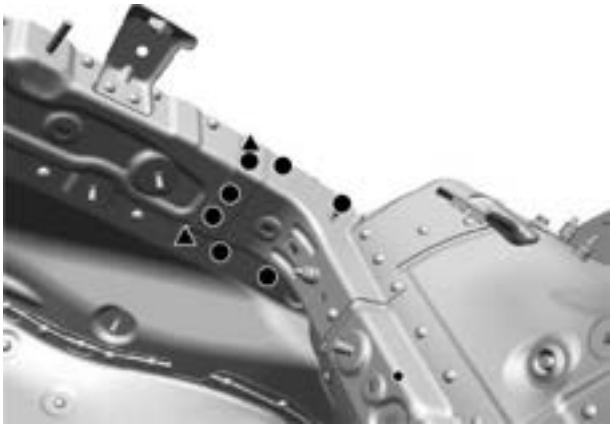

7. From the front wheel cover assembly to the ventilation panel assembly;

8. From the lower crossbeam assembly of the front panel to the front panel assembly.

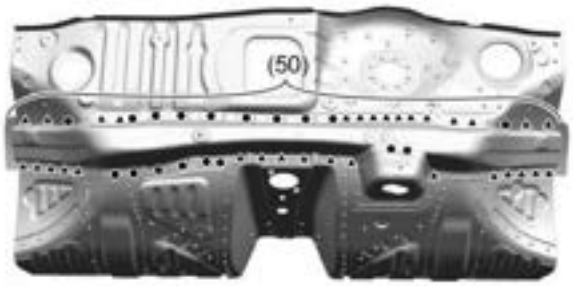

Side wall area

structure

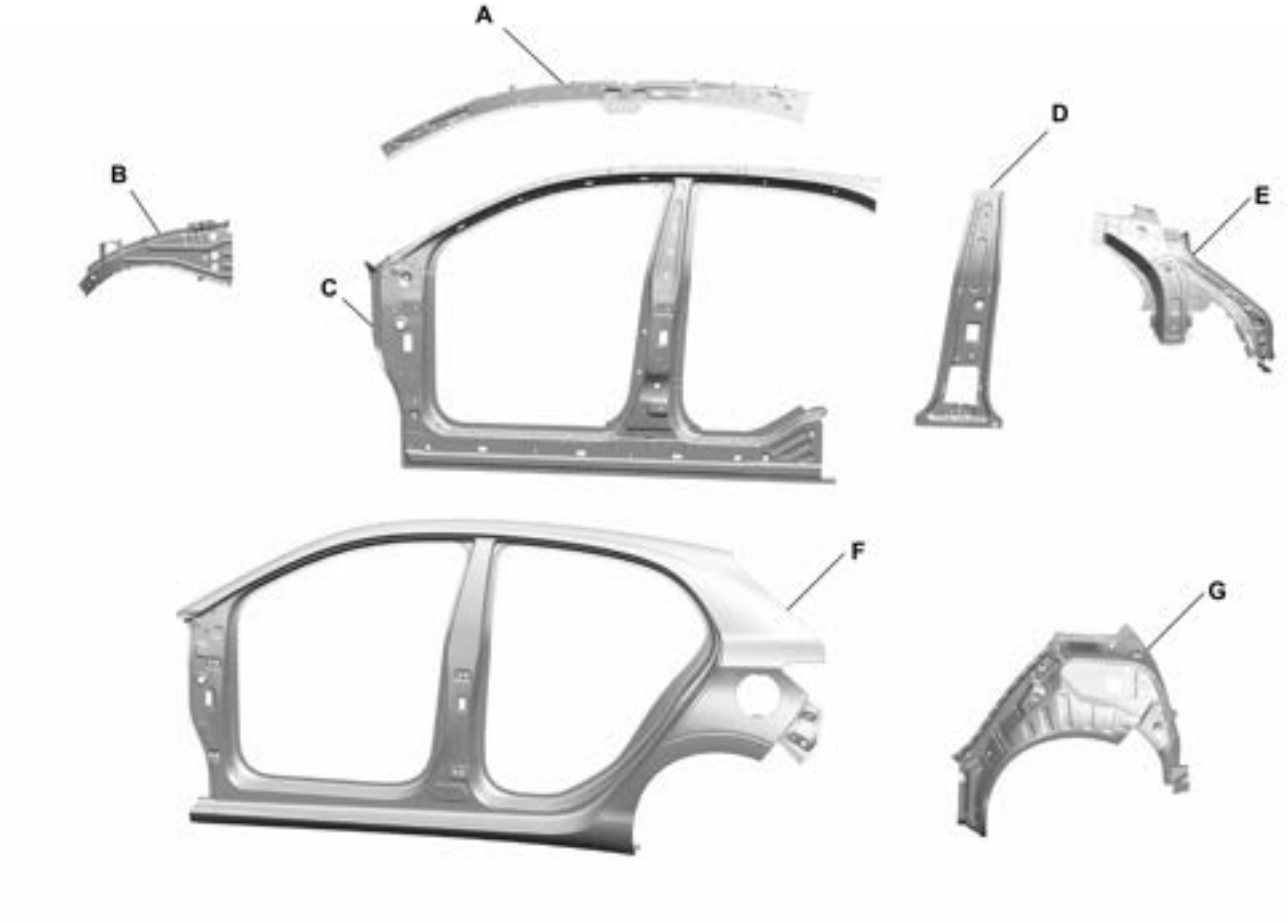

A-Upper side beam sealing plate assembly

B-Front panel upper crossbeam assembly

C-Side Outer Panel Reinforcement Plate Assembly

D-B pillar inner panel sealing plate assembly

E-Rear taillight mounting plate assembly

F-side outer panel

G-Rear wheel cover inner panel assembly

1. From the upper side beam sealing plate assembly to the side outer panel reinforcement plate assembly;

2. From the upper crossbeam assembly of the front bumper to the inner panel assembly of the A-pillar;

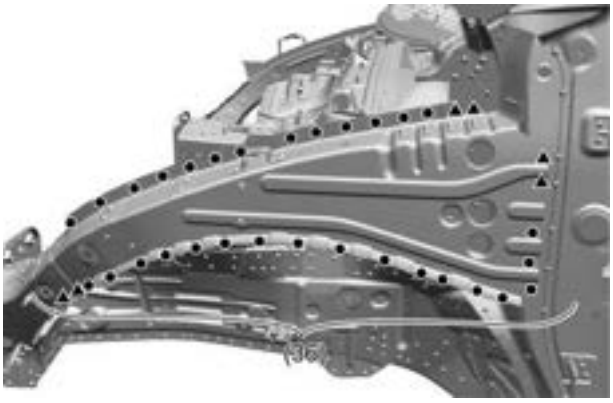

3. Install the rear tail light mounting plate assembly to the outer plate assembly of the rear wheel cover;

4. Side wall outer panel to side wall outer panel reinforcement plate assembly;

5. From the inner panel assembly of the rear wheel cover to the outer panel of the side wall;

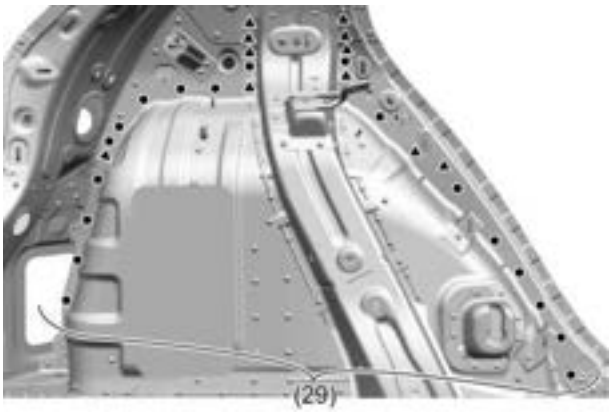

6. Install the rear tail light mounting plate to the rear inner panel assembly;

7. Side wall outer panel to side wall outer panel reinforcement plate assembly;

8. From the B-pillar inner panel closure panel assembly to the side outer panel reinforcement panel assembly;

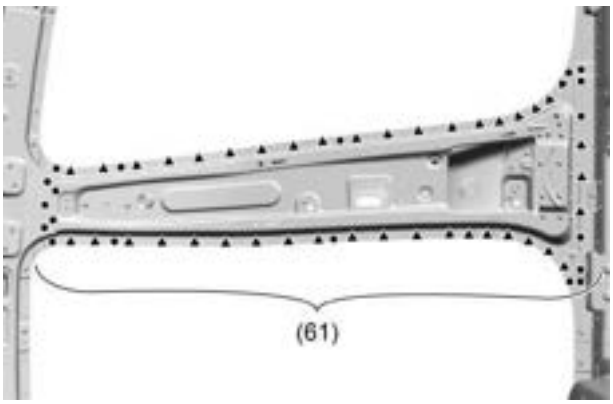

Roof area

structure

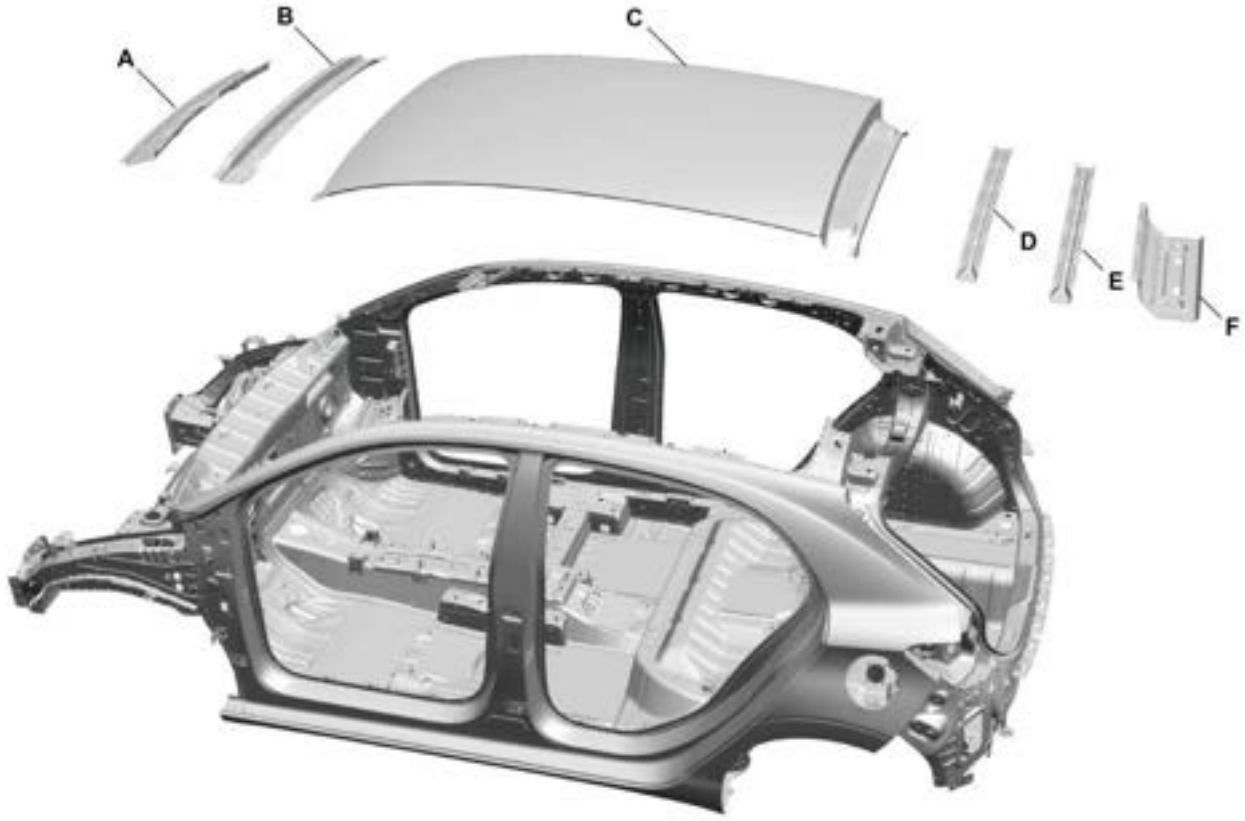

A-Roof front crossbeam assembly

B-Roof front crossbeam assembly

C-top cover plate

D-Roof First Middle Cross Beam

E-Roof Second Middle Cross Beam

F-Roof Rear Cross Member Assembly

1. Roof front crossbeam assembly to B-pillar inner panel sealing plate assembly;

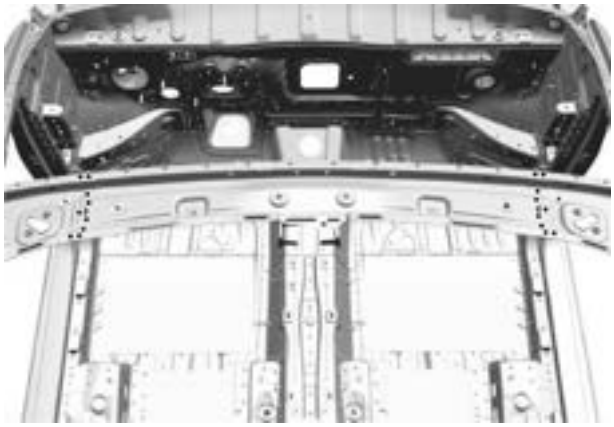

2. The first crossbeam of the roof, the second crossbeam of the roof to the B-pillar inner panel sealing plate assembly;

3. Top cover plate to roof rear crossbeam and rear inner panel assembly;

4. Top cover plate to roof front crossbeam and B-pillar inner panel sealing plate assembly;

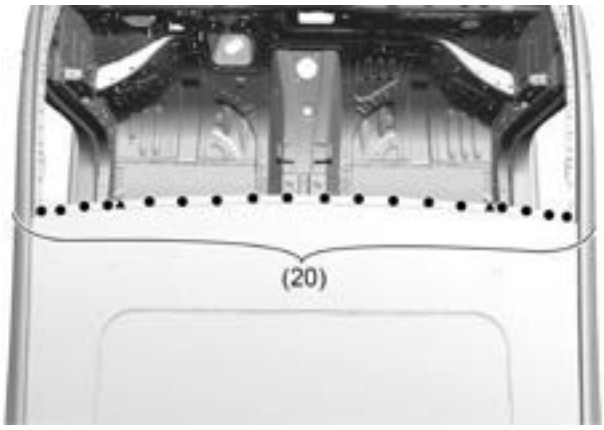

5. Roof rear crossbeam to rear inner panel assembly;

Body Size

Point-to-point Size Information

Bodyside and Roof Information

A

前门上铰链安装孔Φ14

Front door upper hinge mounting hole

B

前门下铰链安装孔Φ14

Front door lower hinge mounting hole

C

后门上铰链安装孔Φ16

Rear door upper hinge mounting hole

D

后门下铰链安装孔Φ16

Rear door lower hinge mounting hole

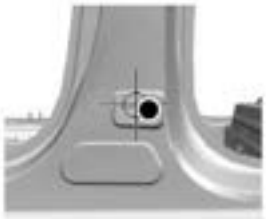

E

前门限位器安装孔Φ11

Front door retainer mounting hole

F

后门限位器安装孔Φ11

Rear door retainer mounting hole

G

后门锁扣安装孔Φ9

Rear door swith mounting hole

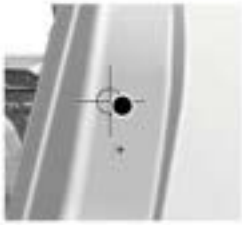

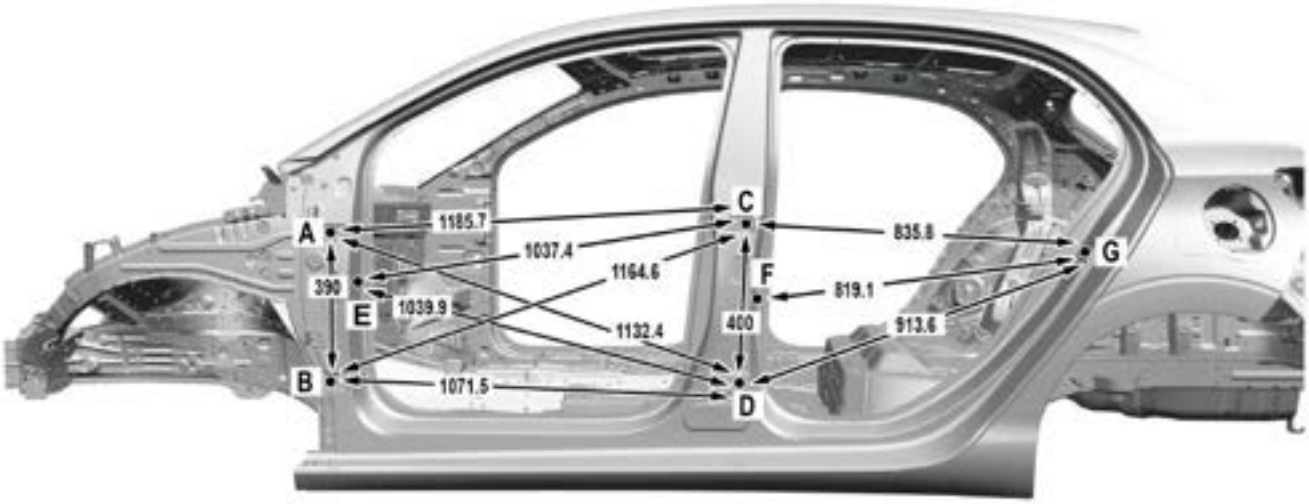

A1A2

遮阳板安装孔 Φ7

Sun visor mounting hole

B1B2

天窗安装孔 Φ7

Sunroof mounting hole

C1C2

天窗安装孔 Φ7

Sunroof mounting hole

D

顶棚安装孔 Φ8.4

Ceiling mounting hole

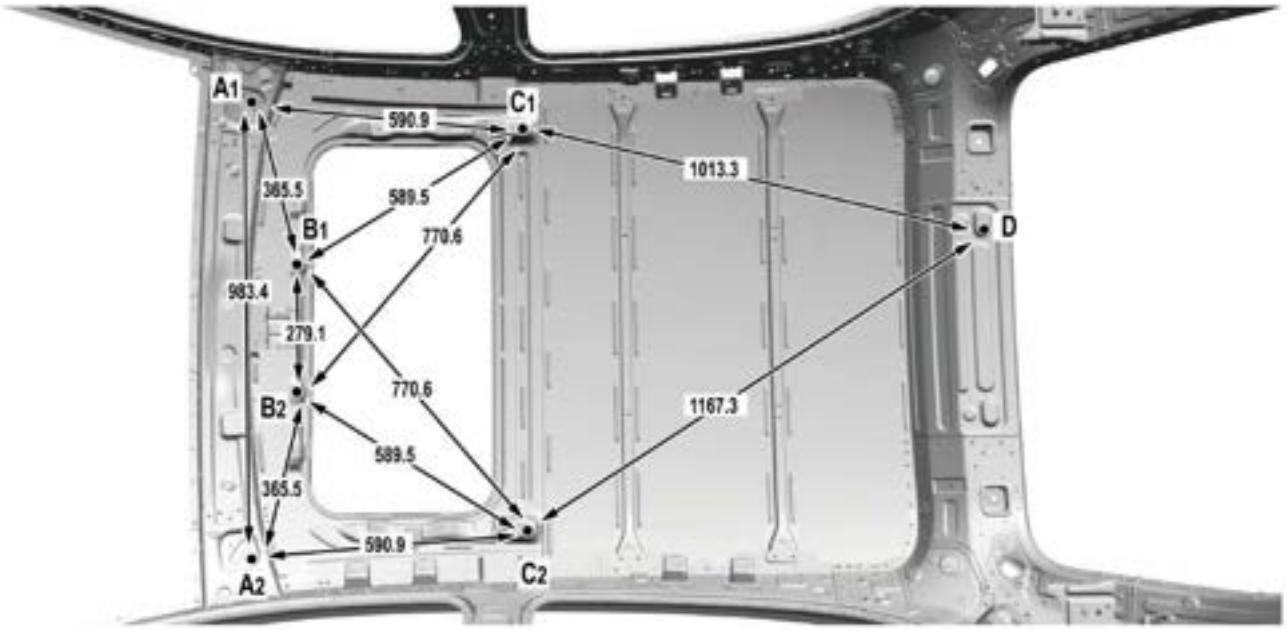

Note：All dimensions are for hole/slot centres.

Underbody Information

A1A2
前副车架安装孔Φ14
Front subframe mounting hole

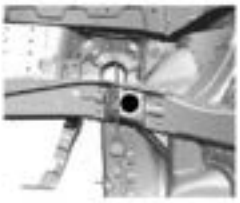

B1B2
前副车架安装孔Φ16
Front subframe mounting hole

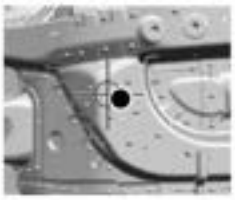

C1C2
拖曳臂安装孔Φ20
Trailing arm mounting hole

D1D2
油箱安装孔Φ12
Tank mounting hole

E1E2
后减震弹簧安装孔Φ14
Rear shock absorber spring mounting hole

b
主基准孔Φ20
Main reference hole

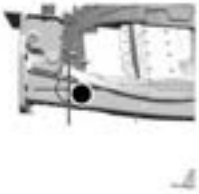

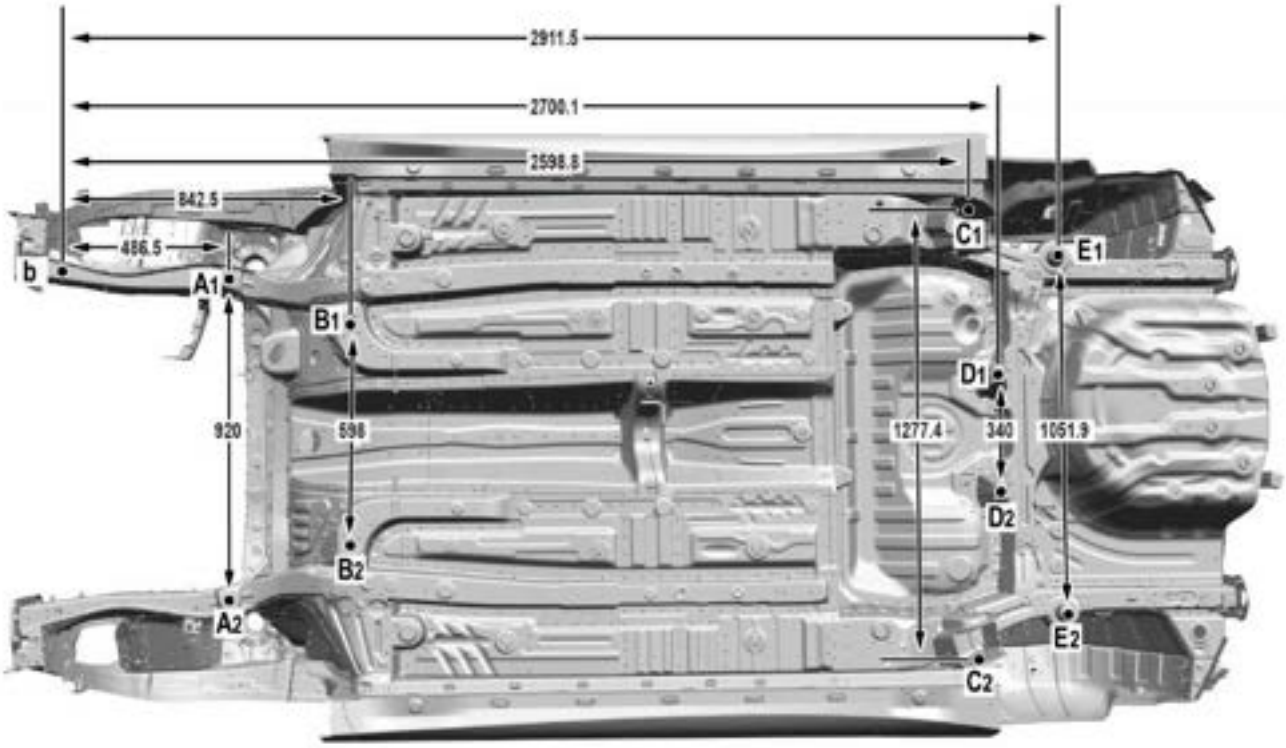

Note：All dimensions are for hole/slot centres.

Rear End Information

A1A2

尾门拉链安装孔Φ12

Tail door link mounting hole

B1B2

尾门气弹簧安装孔Φ13

Tailgate gas spring mounting hole

C1C2

尾灯安装孔Φ7

Tail lamp mounting hole

D1D2

后缓冲梁安装孔Φ12

Rear bumper beam mounting hole

E1E2

后缓冲梁安装孔Φ9

Rear bumper beam mounting hole

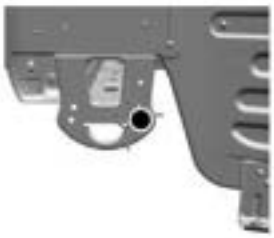

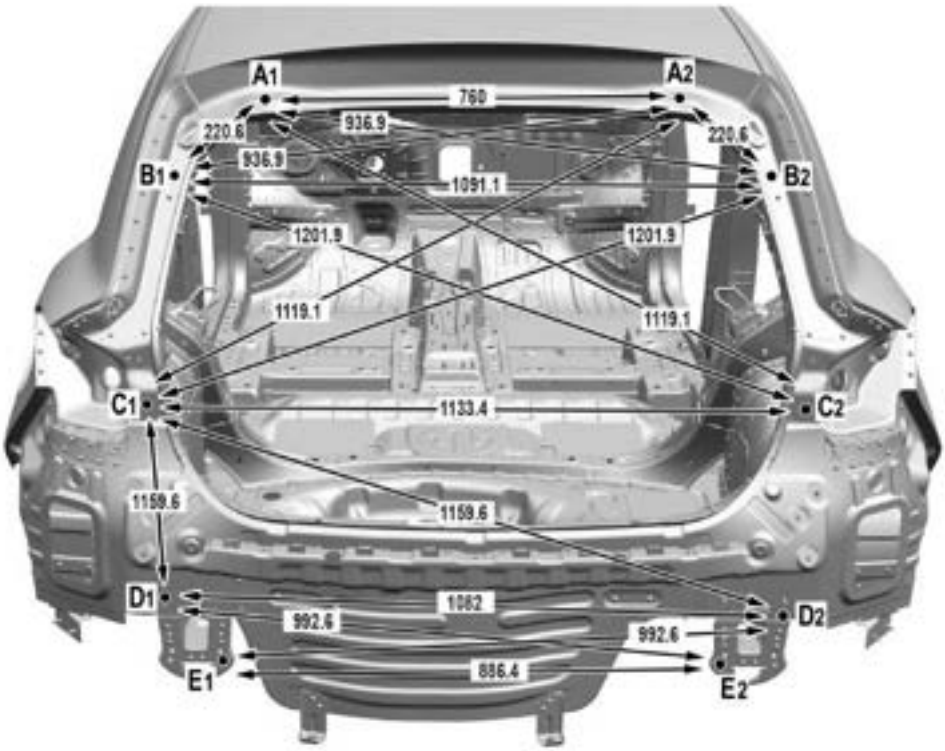

Note：All dimensions are for hole/slot centres.

Interior Information

A1A2

换挡机构安装孔Φ 8.2

Shift mechanism mounting hole

B1B2

前排座椅安装孔 Φ 11

Front seat mounting hole

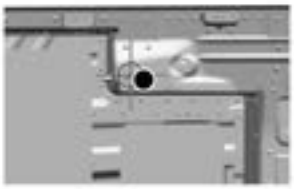

C1C2

前排座椅安装孔Φ 11

Front seat mounting hole

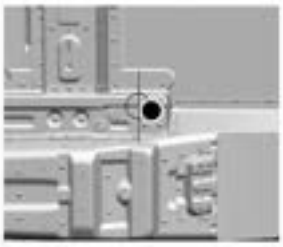

D

后排座椅安全带支架安装孔 Φ 13

Rear seat belt bracket mounting hole

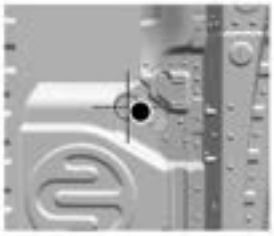

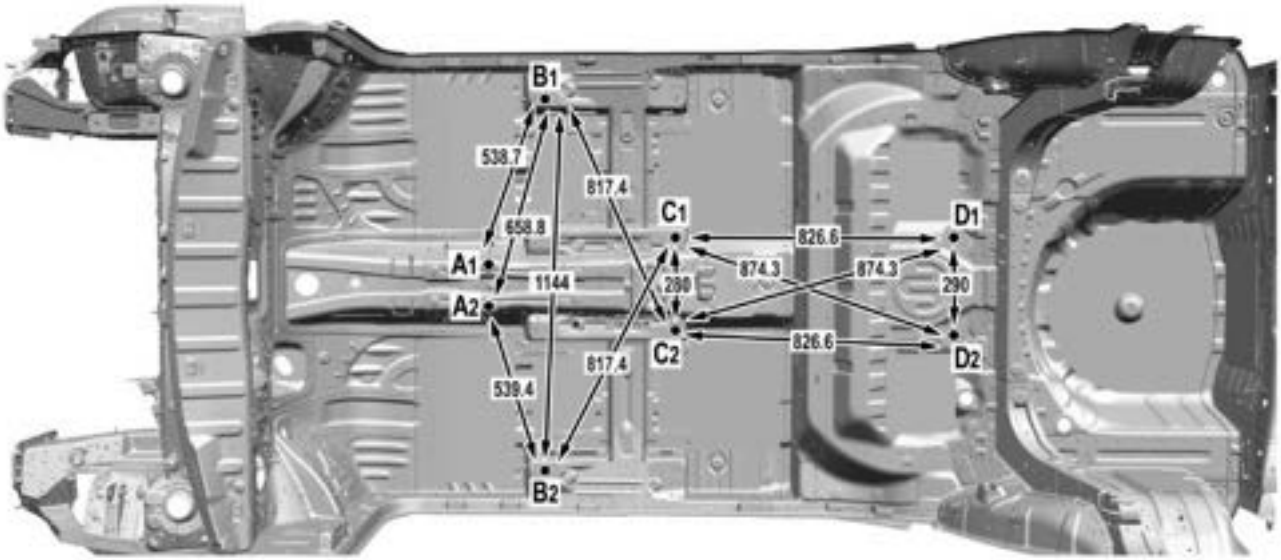

Note：All dimensions are for hole/slot centres.

Front End Information

A1A2

发动机罩铰链安装孔 Φ 9

Hood hinge mounting hole

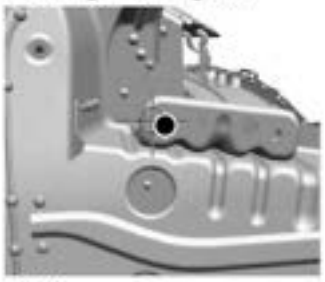

B

变速箱悬置安装孔 Φ 12

Transmission mount mounting hole

C

变速箱悬置安装孔 Φ 16

Transmission mount mounting hole

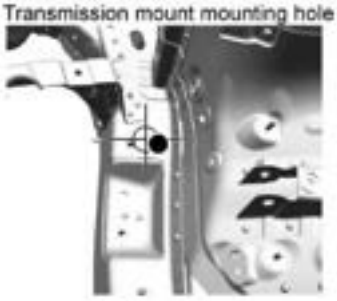

D1D2

前缓冲梁安装孔 Φ 14

Front buffer beam mounting hole

E1E2

前缓冲梁安装孔 Φ 14

Front buffer beam mounting hole

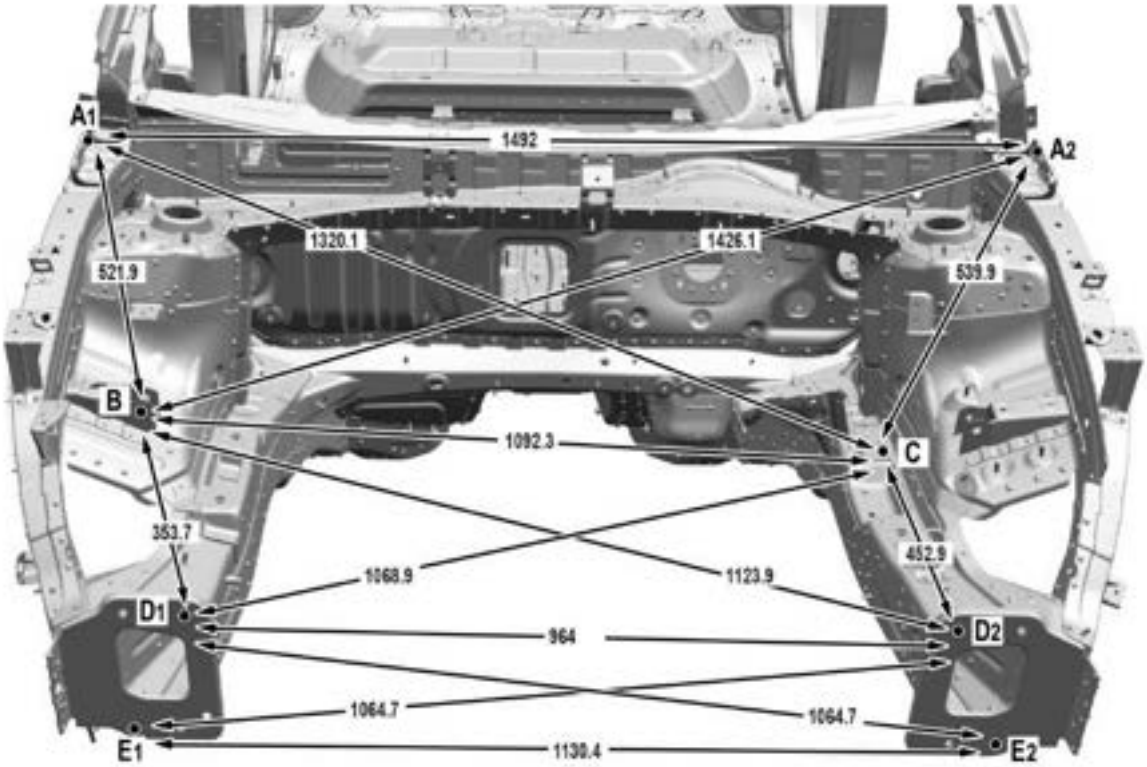

Note：All dimensions are for hole/slot centres.

Gap Information

Body Side Information

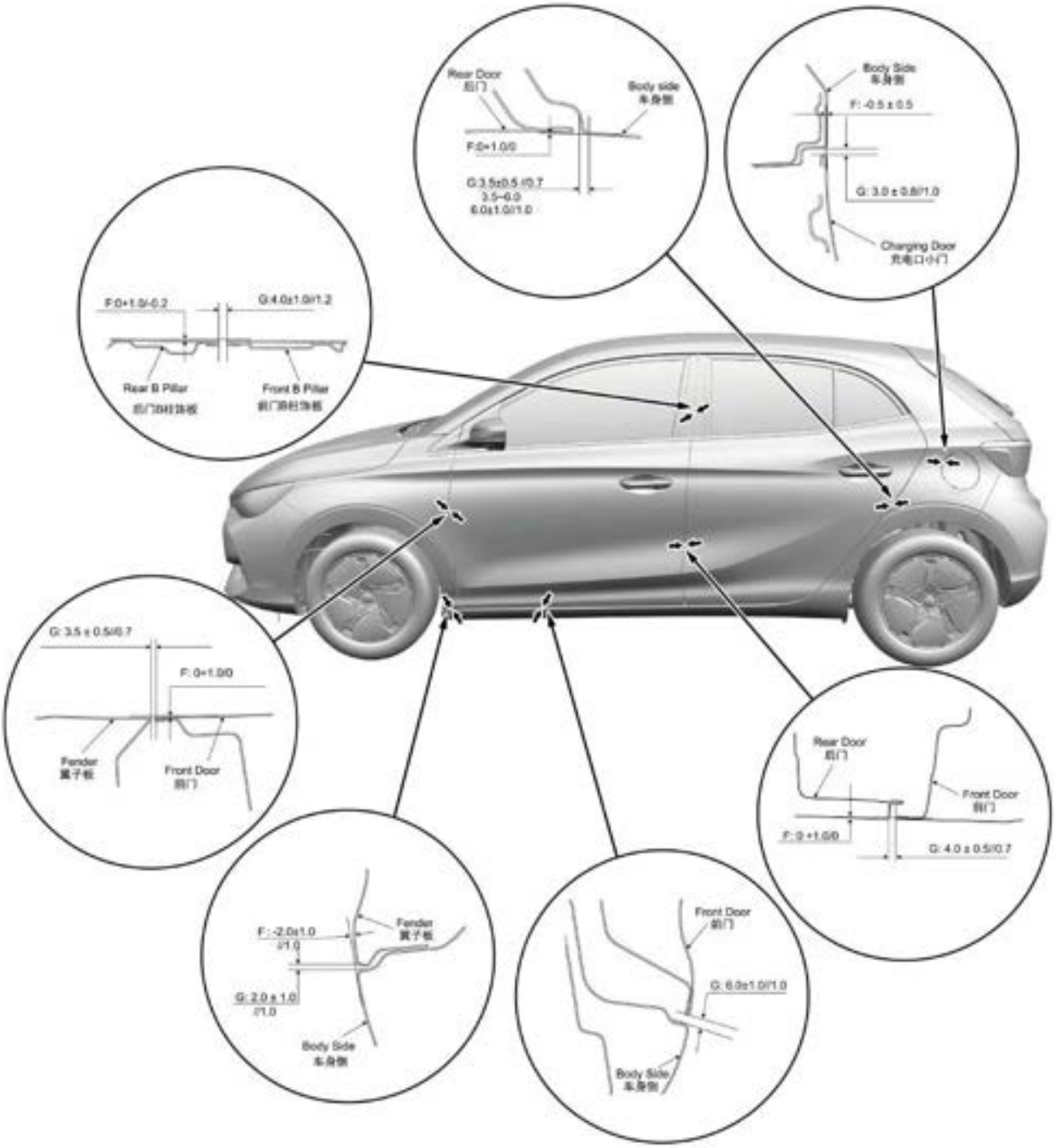

Note : "//" represents uniformity requirement, which means the difference between the maximum clearance and the minimum clearance should be within the specified range.

Front End Information

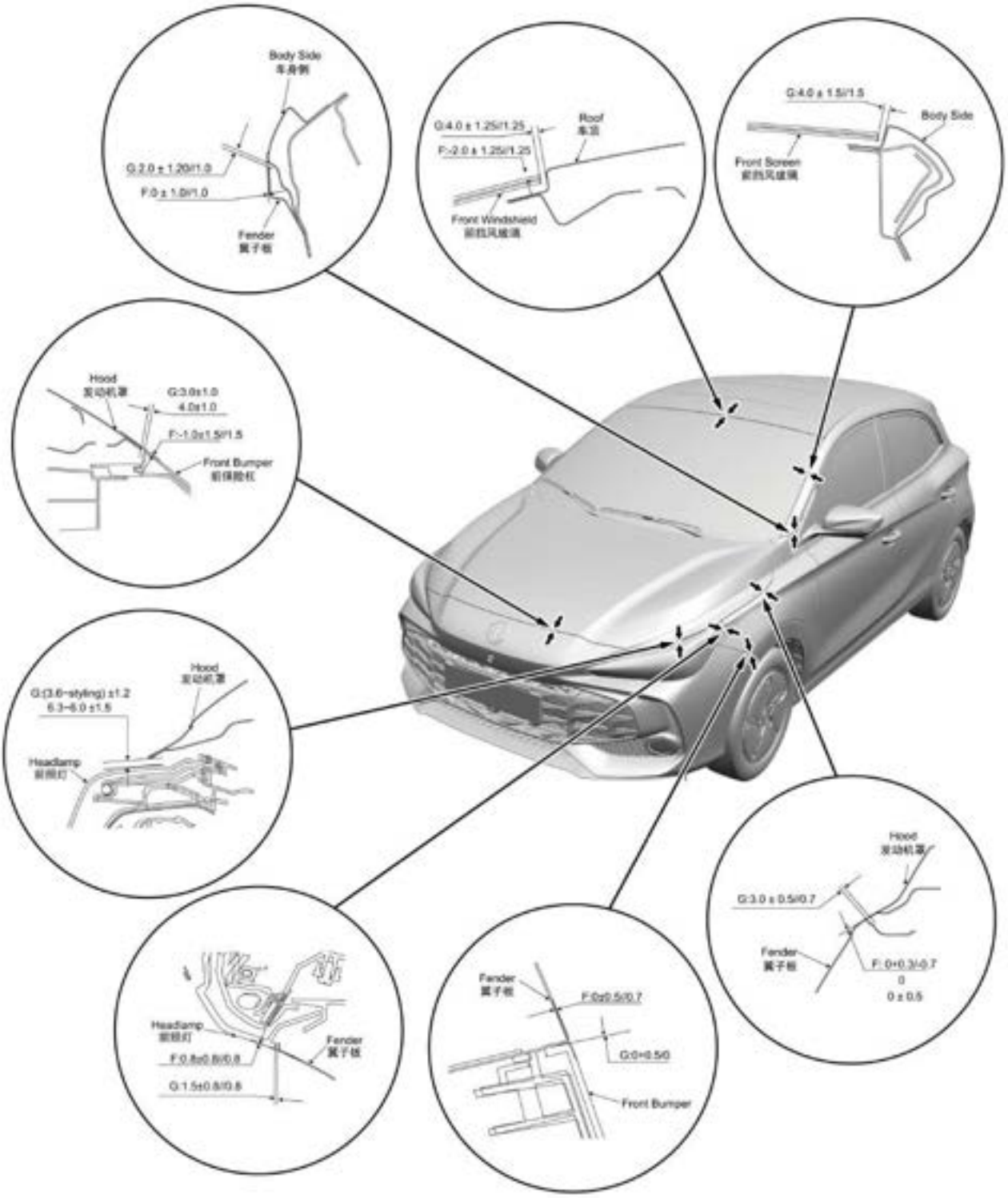

Note : "//" represents uniformity requirement, which means the difference between the maximum clearance and the minimum clearance should be within the specified range.

Rear End Information

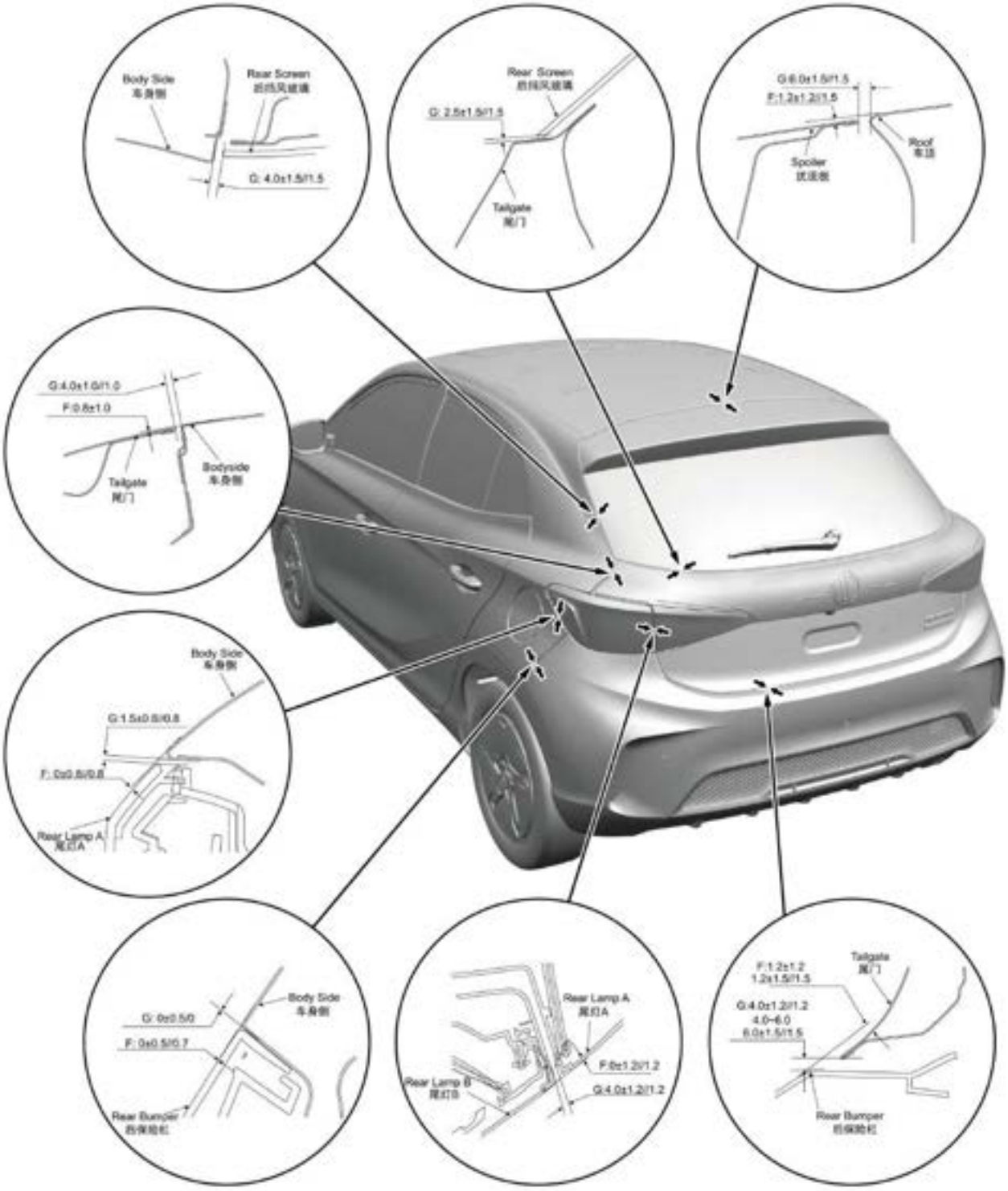

Note : "//" represents uniformity requirement, which means the difference between the maximum clearance and the minimum clearance should be within the specified range.

Sunroof Information

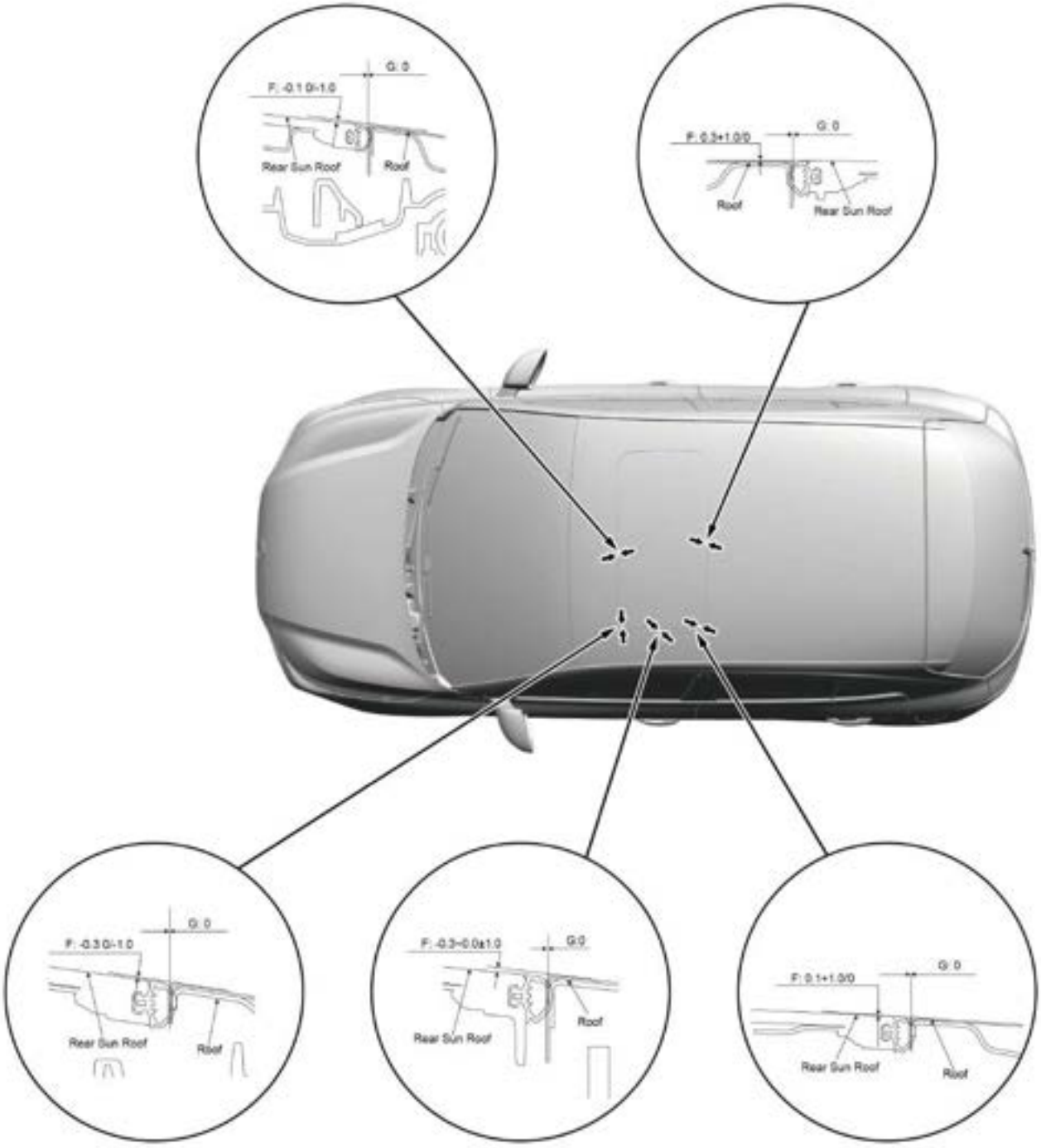

Note : "//" represents requirements for uniformity, which means the difference between maximum and minimum values of measured gap shall be within the specified range.

Vehicle Access System

Description and Operation

System Layout

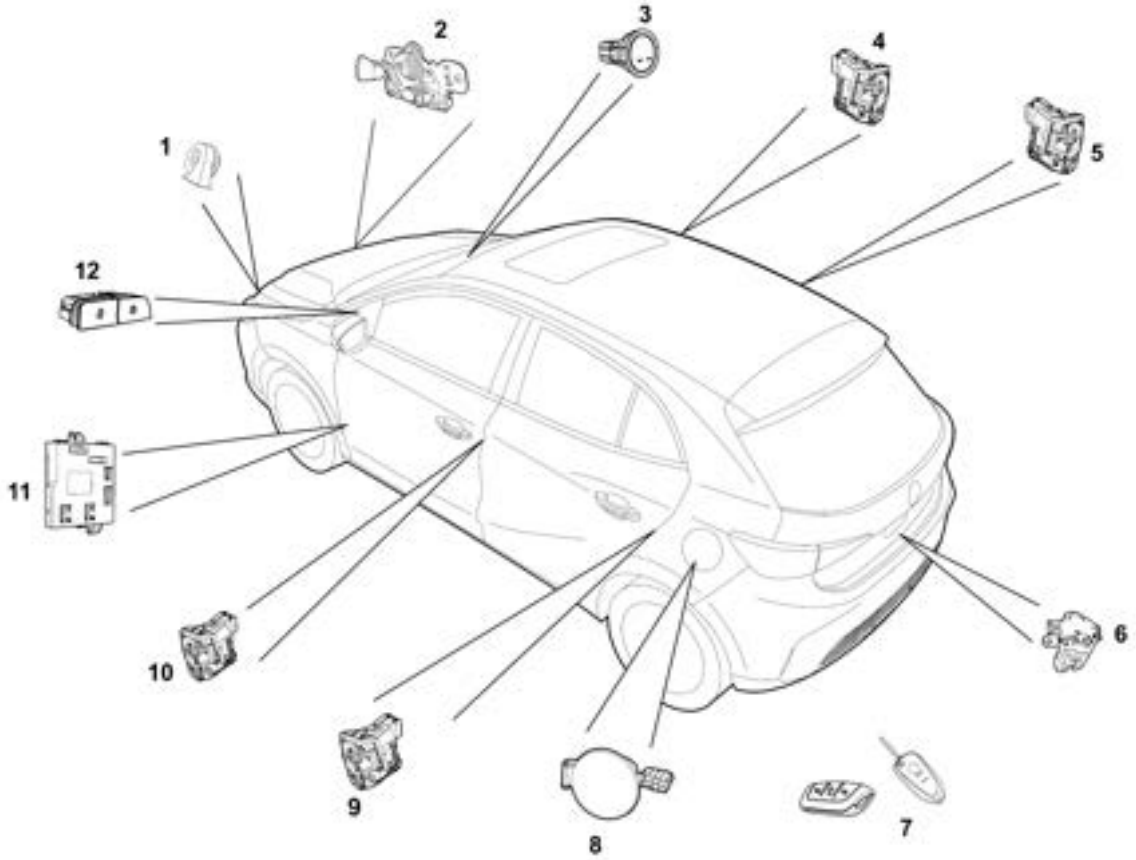

1. Horn
2. Front Compartment Lock Assembly
3. Start Switch
4. Right Front Door Lock Assembly
5. Right Rear Door Lock Assembly
6. Tailgate Lock Assembly
7. Keys
8. Fuel Filler Flap
9. Left Rear Door Lock Assembly
10. Driver Door Lock Assembly
11. Body Control Module
12. Door Lock Switch

System Control Diagram

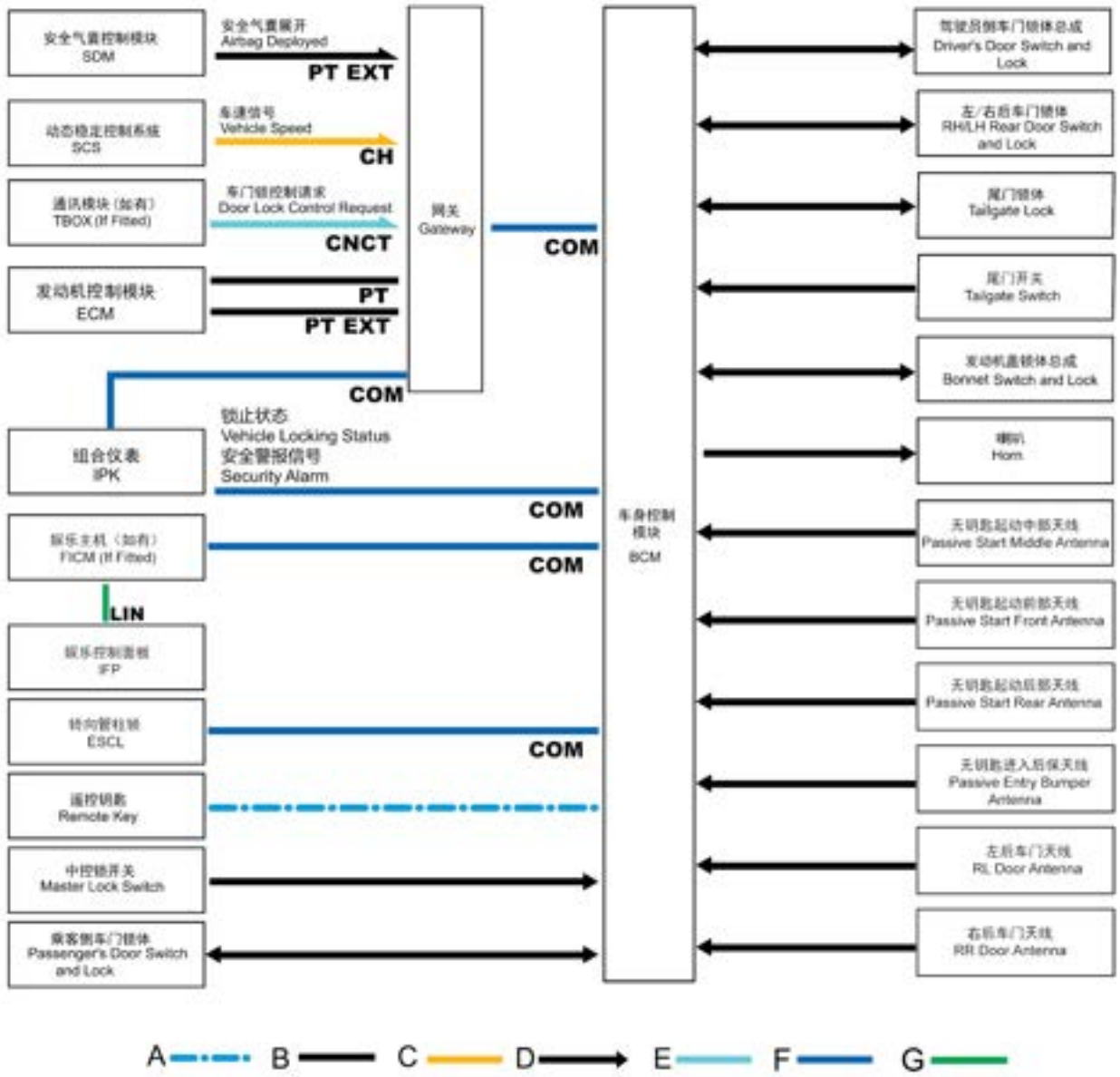

S8210023

A = RF Signal; B = Power HS/Power Extension CAN Bus; C = Chassis HS CAN Bus; D = Hard Wire; E = Connection CAN Bus; F = Comfort CAN Bus; G = LIN Bus

Operation

Overview

The vehicle security system includes the following three parts:

1. Peripheral system:
   - Bonnet, Door and Tailgate Switch
   - Start Switch
   - Door Lock Switch (Unlock/Lock)
2. Acoustic Alarm: Horn
3. Visible alarm: hazard warning lamp

Complete Anti-theft Status

When the three zones of the security system are closed, if a LOCK request from the remote key, mechanical key, PEPS, etc. is received, the security system formally enters the complete anti-theft status. Once in the complete anti-theft status, all activated safety zones will be monitored at all times. When the switch of zone 2 or 3 is enabled (except for the driver door), if you attempt to lock the system from outside, the vehicle will enter the partial lock status and give an error lock alarm.

BCM will monitor the following outside LOCK request signals:

- Valid LOCK request received from the remote key
- Valid LOCK request received from the BCM
- Valid LOCK request received from the driver door lock switch
- Valid LOCK request received from the TBOX (if equipped)

When the security system enters the complete anti-theft status, theBCM will allow the direction indicator lamp to give three flashes.

Complete Anti-theft Status to Partial Anti-theft Status

In the complete anti-theft system, if a valid UNLOCK request of the tailgate is received, theBCM opens the tailgate and the security system enters the partial anti-theft status.

Partial Anti-theft Status

If the error lock is caused by zone 1 only (for example, the bonnet is open), zone 2 and 3 will enter the complete anti-theft status.

If the error lock is caused by zone 2 only (for example, 1 door or more non-driver doors are open), zone 1 and 3 will enter the complete anti-theft status.

If the error lock is caused by zone 3 only (for example, the tailgate is open), zones 1 and 2 will enter the complete anti-theft status.

Error Lock Alarm

With the door (bonnet, tailgate) open, and the Start switch in ACC or ON/RUNNING position, when using the mechanical key or remote key to lock the vehicle from outside and when using the passive lock request, the BCM (Body Control Module) will activate the horn to send an acoustic alarm to indicate the error lock.

Disable Security System

Any of the following operations will cause theBCM to disable the security system:

- Valid UNLOCK request received from the remote key
- Valid UNLOCK request received from the BCM
- Valid UNLOCK request received from the driver door switch
- Valid UNLOCK request received from the TBOX (if equipped)

When the security system is disabled, theBCM will allow the direction indicator lamp to flash once.

Unlock Triggered by Impact

When the airbag control module senses an impact, it will send an UNLOCK request, and the door will unlock automatically except in the case of external locking.

Auto Relock

After being unlocked with the remote key, the vehicle will automatically return to the previous locked status if there is no operation within 30 seconds.

Auto Lock

If the driver door is closed and the vehicle is unlocked, when the vehicle reaches a certain speed, the door will lock automatically.

Auto Unlock

With the vehicle in an internally locked state, turn the Start switch to the OFF position, the vehicle will unlock automatically.

Door Lock Controlled by Touch Switch

With the driver door closed and the impact signals disabled, press the LOCK button of the left touch switch of light stalk switch to lock all doors.

With the vehicle internally locked, press the UNLOCK button of the left touch switch of light stalk switch to unlock all doors.

Service Guide

Start/Stop Ignition Switch

Remove

1. Disconnect the negative battery cable.
2. Remove the instrument panel front passenger side trim panel assembly.

☞ **Instrument Panel Front Passenger Side Trim Panel Assembly Remove**

3. Remove the driver side lower trim panel assembly.

☞ **Driver Side Lower Trim Panel Assembly Remove**

4. Remove 2 screws fixing the Start/Stop button trim panel to the instrument panel, and remove the Start/Stop button.
5. Loosen the clips and remove the Start/Stop button.

Refit

1. Locate the Start/Stop button to the trim panel, press the clips, and ensure that the clips are fully engaged.
2. Fix the Start/Stop button trim panel to the instrument panel, and fit and tighten 2 screws.
3. Fit the driver side lower trim panel assembly.

☞ **Driver Side Lower Trim Panel Assembly Refit**

4. Fit the instrument panel front passenger side trim panel assembly.

☞ **Instrument Panel Front Passenger Side Trim Panel Assembly Refit**

5. Connect the negative battery cable.

Gateway

Specification

Torque

Description	Value
Bolt-GW module to Instrument Panel beam	6-8NM

Description and Operation

System Layout

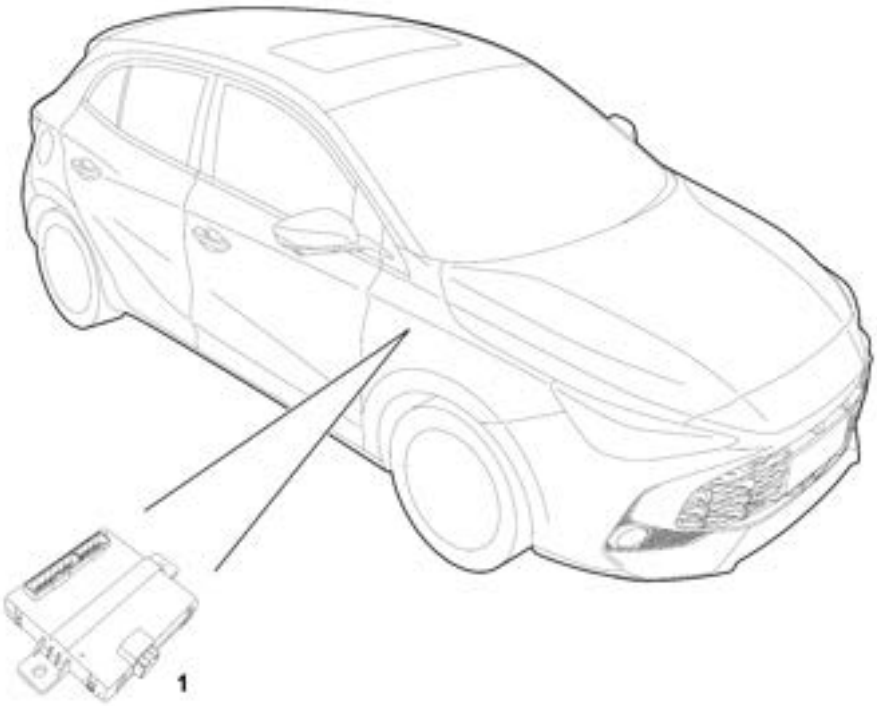

S8220054

1. Gateway

Description

Overview

The GW transmits most of the function signals of the vehicle, which can wake up other controllers through hard wire, or communicate with other components through the network bus. The GW can be used to diagnose the vehicle controllers.

Operation

Definition

The GW mainly connects severalCAN /LIN networks and realizes signal/frame routing of the networks. It also provides input/output interface for the hard wire and realizes some controls. The GW provides the following functions:

1. Network Signal Routing
2. Network Management Master Node
3. Vehicle Power Mode Management Master Node
4. Switch Detection
5. Vehicle Configuration Information

Network Signal Routing

The function of the GW is to establish connection between differentCAN network andLIN network, transmit signals from the sourceCAN /LIN network to the targetCAN /LIN network according to the requirements for network design and realize information exchange and sharing among multiple networks. In addition, the GW supports vehicle remote diagnosis performed by the TBOX (if equipped).

Network Management Master Node

As a network management master node, the GW meets the following requirements for network management:

- When the Start switch is in ACC or ON/RUNNING position, all networks shall communicate.
- When the Start switch is turned to OFF position from ACC or ON/RUNNING position, the network shall delay at least for a certain period, and this time can be configured by the diagnosis.
- As a network management master node, the GW performs the network management strategy viaCAN bus, and the slave nodes on the network can communicate with each other by waking up the GW.

Vehicle Power Mode Management Master Node

- The GW determines the status of the vehicle power mode according to the status of the Start switch status and the Start switch status hard wire input provided to the GW from theBCM . The GW sends the status of the vehicle power mode to theCAN orLIN network. EachCAN orLIN module shall receive the status signal of the power mode from the GW, so as to enable/disable the corresponding function.
- Vehicle Voltage Detection: the GW collects battery voltage, determines the status of the battery voltage and transmits the voltage signal to the network.

Load Management

TheGW can manage the load of some electric appliances by configuration and ensure low battery power consumption during storage and transportation or idle time.

Production Mode

The mode in which theGW is configured while the vehicle is being assembled.

Transportation Mode

After vehicle assembly, programme theGW so that the transportation mode can be used during transportation. And low battery problem can be avoided when the factory delivers the vehicle to a local Authorised Repairer.

With the aftermarket diagnostic tool, a local Authorised Repairer can shift the vehicle load management configuration from transportation mode to normal mode.

Normal Mode

This mode applies the default setting, after completion of the PDI, the vehicle can enter into normal operation.

Switch Detection

- Gear shift switch: the gear shift switch of this vehicle is on the centre console. The GW collects the state information of the gear shift switch and sends the signal to theECM .
- Cruise switch: the GW collects the reliable status signal of the cruise switch and sends the signal to theECM .

Vehicle Configuration Information

When the vehicle rolls off the assembly line, the GW configures the vehicle configuration information on-line and saves the information to the EEPROM memory of the GW. The GW sends the vehicle configuration information to the network as per the information in the EEPROM.

Detailed Information List of Component Pins

End View and Pin Information of GW Harness Connector FA274

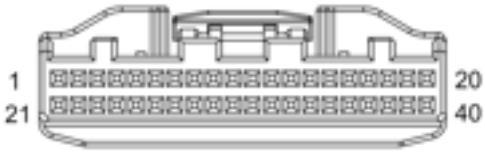

Pin No.	Description
1-4	-
5	Power Supply
6-10	-
11	Diagnosis CAN High
12	Diagnosis CAN Low
13	LIN1
14	LIN2
15	Power CAN Low
16	Power CAN High
17	Chassis CAN Low
18	Chassis CAN High
19	Comfort CAN Low
20	Comfort CAN High
21-22	-
23	Ground 2
24	Intelligent Driving CAN Low
25	Intelligent Driving CAN High
26-39	-
40	KL15 Relay

End View and Pin Information of GW Harness Connector FA279

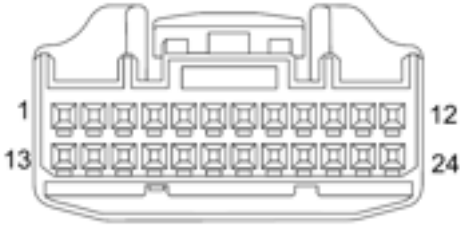

Pin No.	Description
1	Chassis CAN Low
2	Chassis CAN High
3	Connection CAN Low
4	Connection CAN High
5-7	-
8	Start Switch State Indicator
9	-
10	GW Power Supply 1
11-14	-
15	Local Tap+/-Switch
16-18	-
19	Ground 1
20	-
21	Power Extension CAN Low
22	Power Extension CAN High
23-24	-

Service Guide

Gateway Module

Remove

1. Disconnect the negative battery cable.
2. Remove the glove box assembly.

☞ Glove Box Assembly Remove

3. Disconnect the harness connector of the gateway.
4. Remove 2 bolts fixing the gateway to the instrument panel beam bracket, disconnect the harness connector, and remove the gateway.

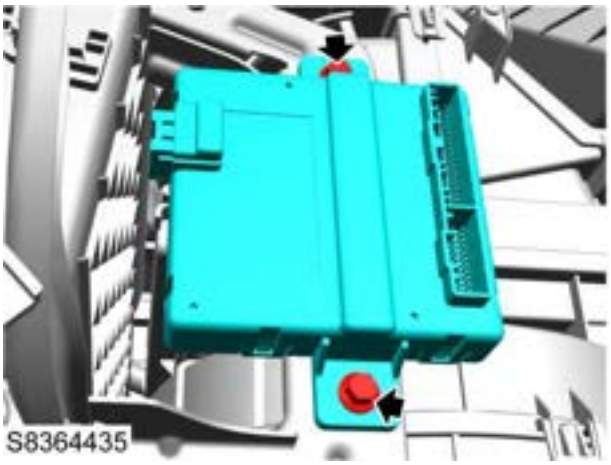

Refit

1. Connect the harness connector of the gateway.
2. Connect the negative battery cable.
3. Programme and encode the gateway.

☞ Gateway Control Module (GW)

4. Fix the GW to the instrument panel beam bracket, fit 2 bolts, tighten them to **6-8NM** , and check the torque.
5. Fit the glove box assembly.

☞ Glove Box Assembly Refit

Seat Belt

Specification

Torque

Description	Value
Bolt-Front seat belt retractor to body	35-45Nm
Bolt-Front seat belt to body	35-45Nm
Bolt-Front seat belt buckle to seat	35-45Nm
Bolt-Rear seat belt retractor to body	35-45Nm
Bolt-Rear seat belt to body	35-45Nm
Bolt-Rear seat belt buckle to body	35-45Nm
Nut-Rear middle seat belt retractor to squab	35-45Nm
Bolt-Rear middle seat belt to body	35-45Nm

Description and Operation

System Layout

Seat Belt Layout

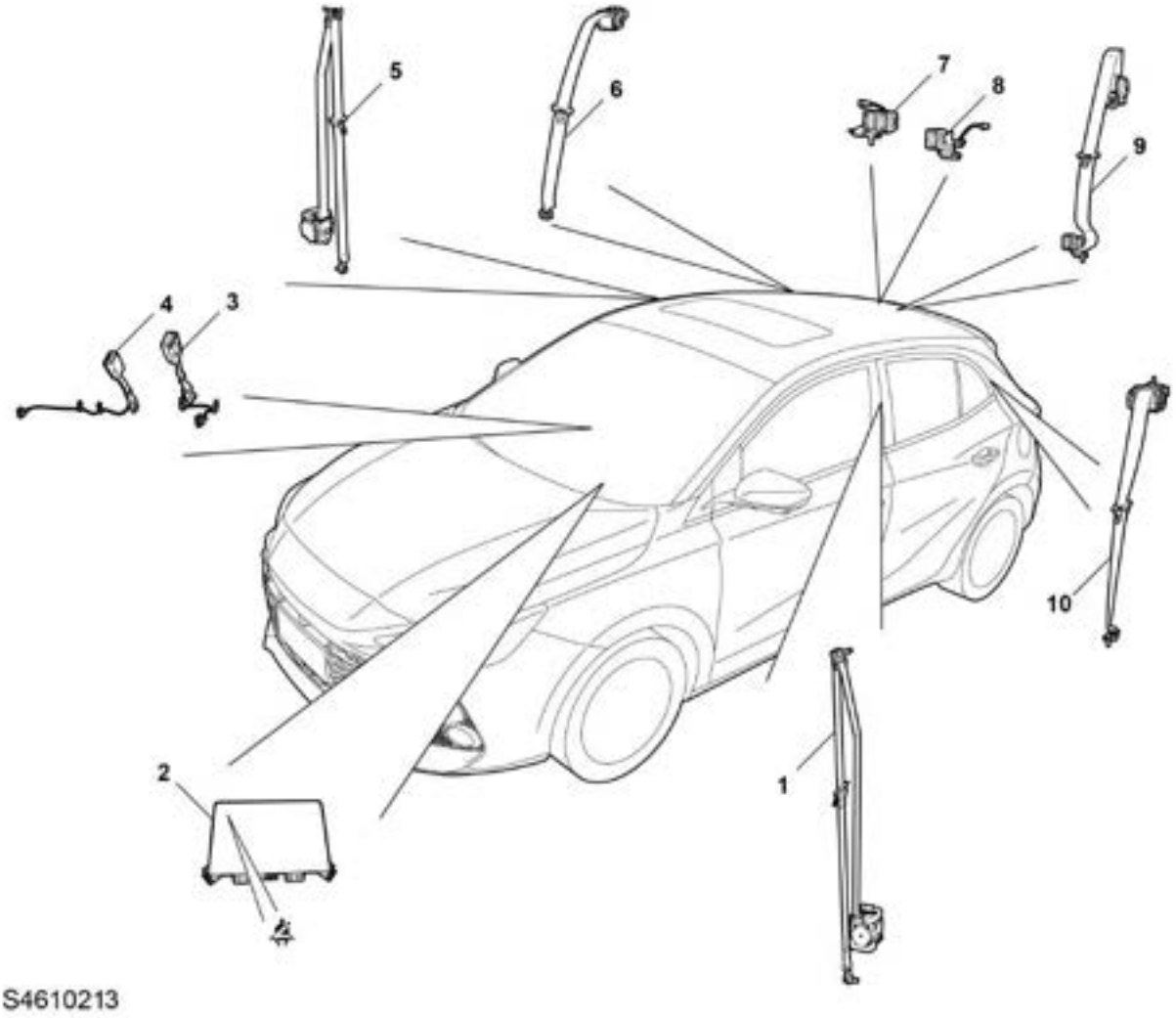

1. Driver's seat belt
2. seat-belt warning light
3. Front left seat belt buckle
4. Front right seat belt buckle
5. Passenger's seat belt
6. Rear seat right safety belt assembly
7. Rear seat right and middle seat belt buckle
8. Rear seat left safety belt buckle
9. Rear seat middle safety belt assembly
10. Rear seat left safety belt assembly

System Control Diagram

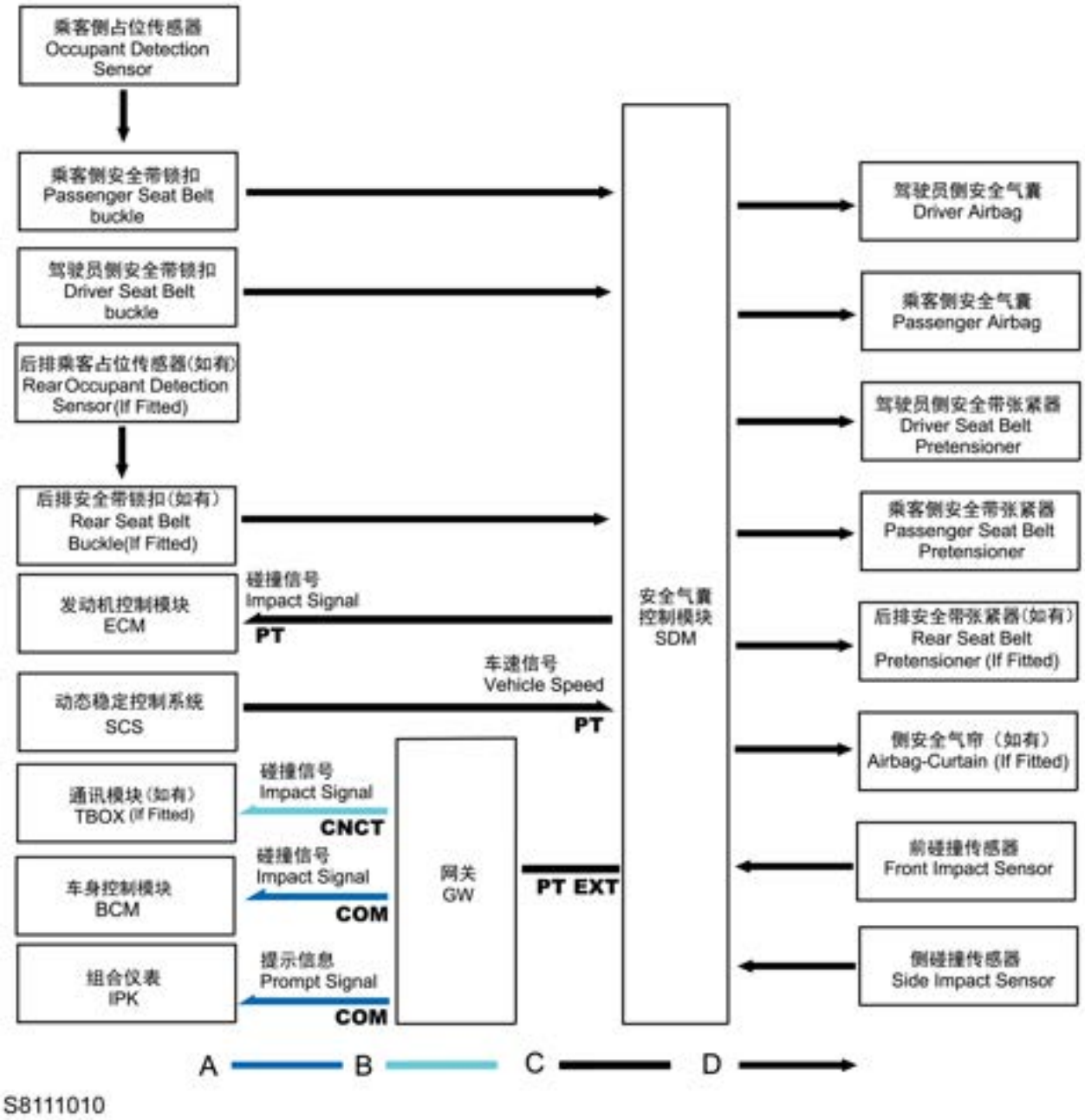

S8111010

A = Comfort HS CAN Bus; B = Connection HS CAN Bus; C = Power HS CAN Bus; D = Hard Wire

Description

Front Seat Belt Pretensioner

S4615193

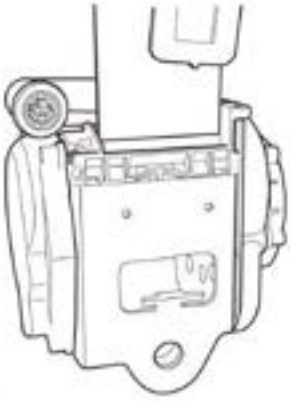

S4615194

In case of collision, the front seat belt pretensioner is tightened, which ensures the occupants are securely kept in their seats. The seat belt pretensioner unit is fixed by bolts to the seat belt inertial retractor assembly in the B pillar. The seat belt pretensioner connector is a 2-pin connector connected with the body harness.

In case of a collision, the seat belt pretensioner will be controlled by signals transmitted from theSRS /ECU . The two pretensioner inertial reels share the same positioning method and working principle. Each pretensioner unit is equipped with a trigger and a propulsion generator, which act on the rotor of the seat belt inertia reel.

Warning : Once the pre-tensioner has been operated, it cannot be reset. Therefore the pre-tensioner must be replaced.

Front Seat Belt

The inertial retractor of the front seat belt is fitted on the body, in the cavity at the bottom of the B pillar lower trim panel. Pull the belt webbing from the inertial retractor, and fix it to the mounting point under the B pillar by with the D-ring device on the upper part of the B pillar.

Rear Seat Belt Assembly

S4615196

The inertial retractors of the rear seat belts on both sides are fixed in the cavities inside the D pillar by bolts. The seat belt webbing on both sides can be pulled out from the inertial retractor axle through the luggage compartment sunshade support plate, and the other end of the webbing is secured at the mounting point of the body floor under the rear seat cushion.

The inertial retractor of the rear middle seat belt is fixed on the frame in the rear seat foam. The central webbing can be pulled out from the seat retractor axle, and the other end of the webbing is fixed on the body floor under the rear seat cushion.

Seat Belt Warning

The instrument pack of the vehicle is equipped with the seat belt warning lamp.

Some seat belt buckles are integrated with a seat belt unfastened alarm switch, which is connected to the instrument pack throughSRS /ECU . The seat belt warning will be triggered if the seat belt is not fastened firmly during driving. For the front passenger side, to prevent unnecessary warning when there is no passenger on the seat, a pressure sensor is fitted inside the foam of the passenger seat. If there is any passenger on the seat, but the pressure sensor is not activated, then the seat belt warning will not be triggered even if the occupant does not fasten the seat belt.

Operation

Operation of Pretensioning Seat Belt Triggered by SRS ECU:

For seat belts with pretensioner, the initiator and propulsion generator in the seat latch assembly actuates the rotor of seat belt inertial retractor to tighten the seat belt and increase tension, so that the passengers can be restricted on the seat in the event of a collision.

Service Guide

Front Seat Belt Assembly

Remove

1. Disconnect the negative battery cables, and wait for 10 minutes until the SRS backup circuit is discharged.
2. Remove the B pillar upper trim panel.

B Pillar Upper Trim Panel Remove

3. Remove 1 bolt fixing the front seat belt assembly to the body.

4. Remove the door sill trim panel.

Door Sill Trim Panel Remove

5. Remove 1 bolt fixing the front seat belt retractor to the body.

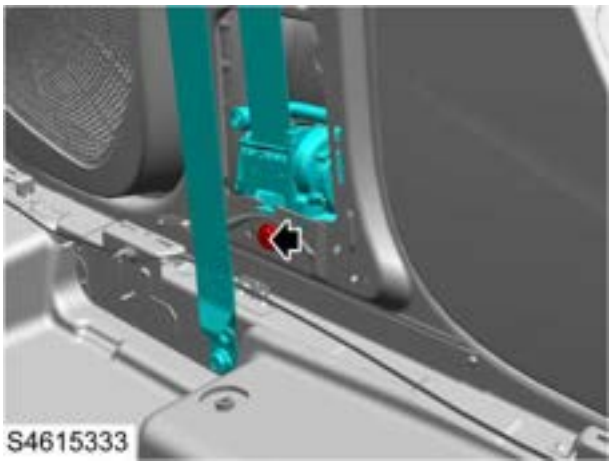

6. Remove the front seat belt assembly.

Refit

1. Locate the front seat belt assembly to the body.
2. Fix the front seat belt retractor to the body, fit 1 bolt, tighten it to **35-45Nm** , and check the torque.
3. Fit the door sill trim panel.

Door Sill Trim Panel Refit

4. Fix the front seat belt assembly to the body, fit 1 bolt, tighten it to **35-45Nm** , and check the torque.
5. Fit the B pillar upper trim panel.

B Pillar Upper Trim Panel Refit

6. Connect the negative battery cable. Perform a system check, press the Start switch, and check if the SRS warning lamp illuminates for several seconds and then goes out.

Front Seat Belt Buckle

Remove

1. Remove the front seat assembly.

☞Front Seat Assembly Remove

2. Remove 1 bolt fixing the front seat belt buckle to the seat frame.

S4615331

3. Loosen the harness connector, and remove the front seat belt buckle.

Refit

1. Locate the seat belt buckle to the seat, and fit the harness clip.
2. Fix the front seat belt buckle to the seat frame, fit 1 bolt, tighten it to **35-45Nm** , and check the torque.
3. Fit the front seat assembly.

☞Front Seat Assembly Refit

Rear Seat Belt Assembly

Remove

1. Remove the rear seat cushion.

☞Rear Seat Cushion Remove

2. Remove 2 bolts fixing the rear seat belt to the body.

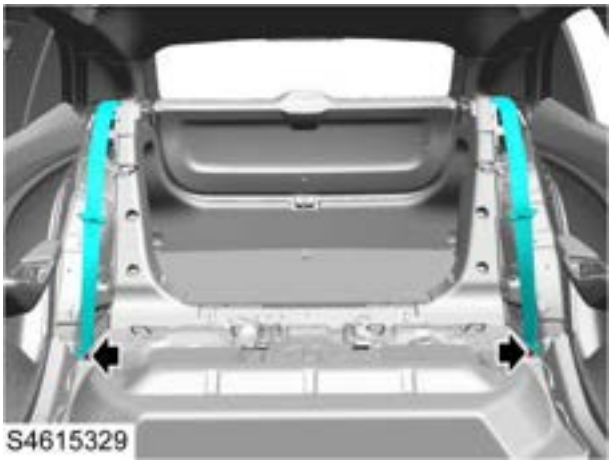

3. Fold down the rear seat back.
4. Remove the C pillar upper trim panel.

☞C Pillar Upper Trim Panel Remove

5. Remove 1 bolt fixing the left/right rear seat belt retractor to the body, and remove the rear seat belt assembly.

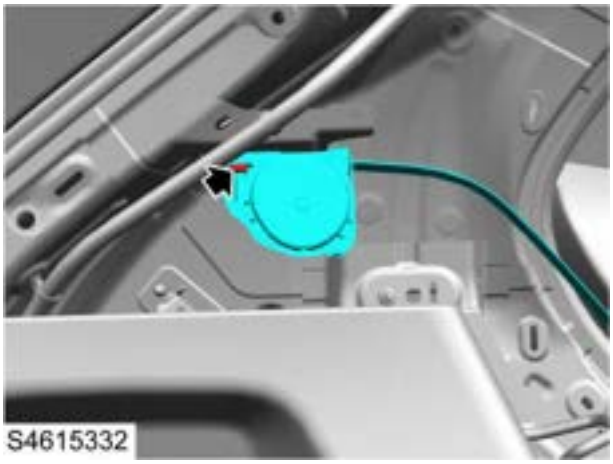

Refit

1. Fix the left (right) rear seat belt retractor to the body, fit 1 bolt, tighten it to **35-45Nm** , and check the torque.
2. Fit the C pillar upper trim panel.

☞C Pillar Upper Trim Panel Refit

3. Restore the seat back.
4. Fix the rear seat belt to the body, fit 2 bolts, tighten them to **35-45Nm** , and check the torque.
5. Fit the rear seat cushion.

☞Rear Seat Cushion Refit

Rear Seat Belt Buckle

Remove

1. Remove the rear seat cushion assembly.

☞Rear Seat Cushion Assembly Remove

2. Remove 2 bolts fixing the rear seat belt buckle to the body, and remove the rear seat belt buckle.

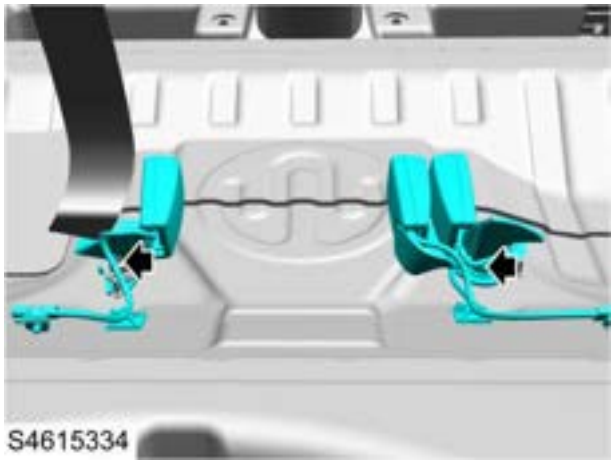

Refit

1. Fix the rear seat belt buckle to the body, fit 2 bolts, tighten them to **35-45Nm** , and check the torque.
2. Fit the rear seat cushion assembly.

☞Rear Seat Cushion Assembly Refit

Rear Seat Central Belt

Remove

1. Remove the rear seat cushion assembly.

Rear Seat Cushion Assembly Remove

2. Remove 1 bolt fixing the rear centre seat belt to the body.

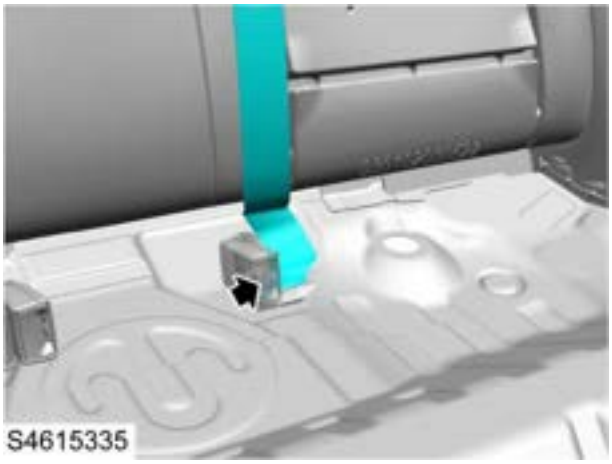

3. Remove the rear seat back cover.

Rear Seat Back Cover Remove

4. Pull open the back foam, and remove 1 nut fixing the rear centre seat belt retractor to the rear seat back frame.

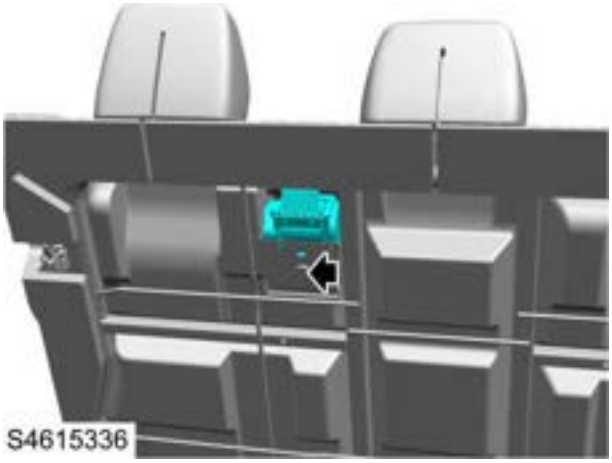

5. Pass the middle seat belt webbing through the decorative frame hole of the seat belt on the rear seat back, and remove the rear middle seat belt assembly.

Refit

1. Pass the rear centre seat belt webbing through the decorative frame hole of the seat belt on the rear seat back.
2. Fix the rear centre seat belt retractor to the rear seat back frame, fit 1 nut, tighten it to **35-45Nm** , and check the torque.
3. Fit the rear seat back cover.

Rear Seat Back Cover Refit

4. Fix the rear centre seat belt to the body, fit 1 bolt, tighten it to **35-45Nm** , and check the torque.
5. Fit the rear seat cushion assembly.

Rear Seat Cushion Assembly Refit

Airbag

Specification

Torque

Description	Value
Bolt-Front impact sensor to front end module	7-10Nm
Bolt-Side impact sensor to body	7-10Nm
Bolt-SDM to body	7-10Nm

Description and Operation

System Layout

Airbag Layout

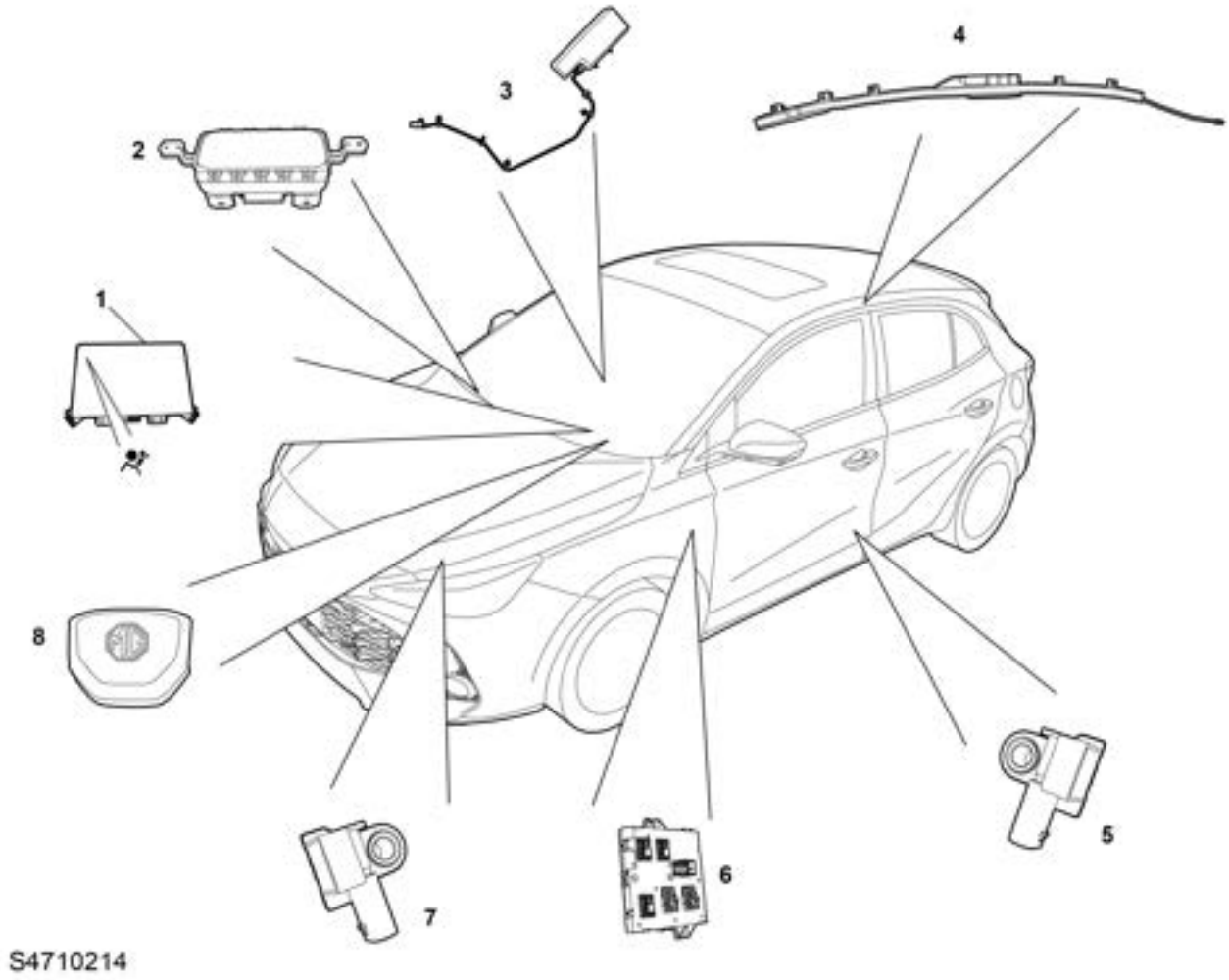

1. Airbag warning light
2. Front passenger side airbags
3. Seat side airbags
4. Side safety curtain (if any)
5. Side collision sensor
6. Body Control Module (BCM)
7. Front collision sensor
8. Steering wheel airbag

System Control Diagram

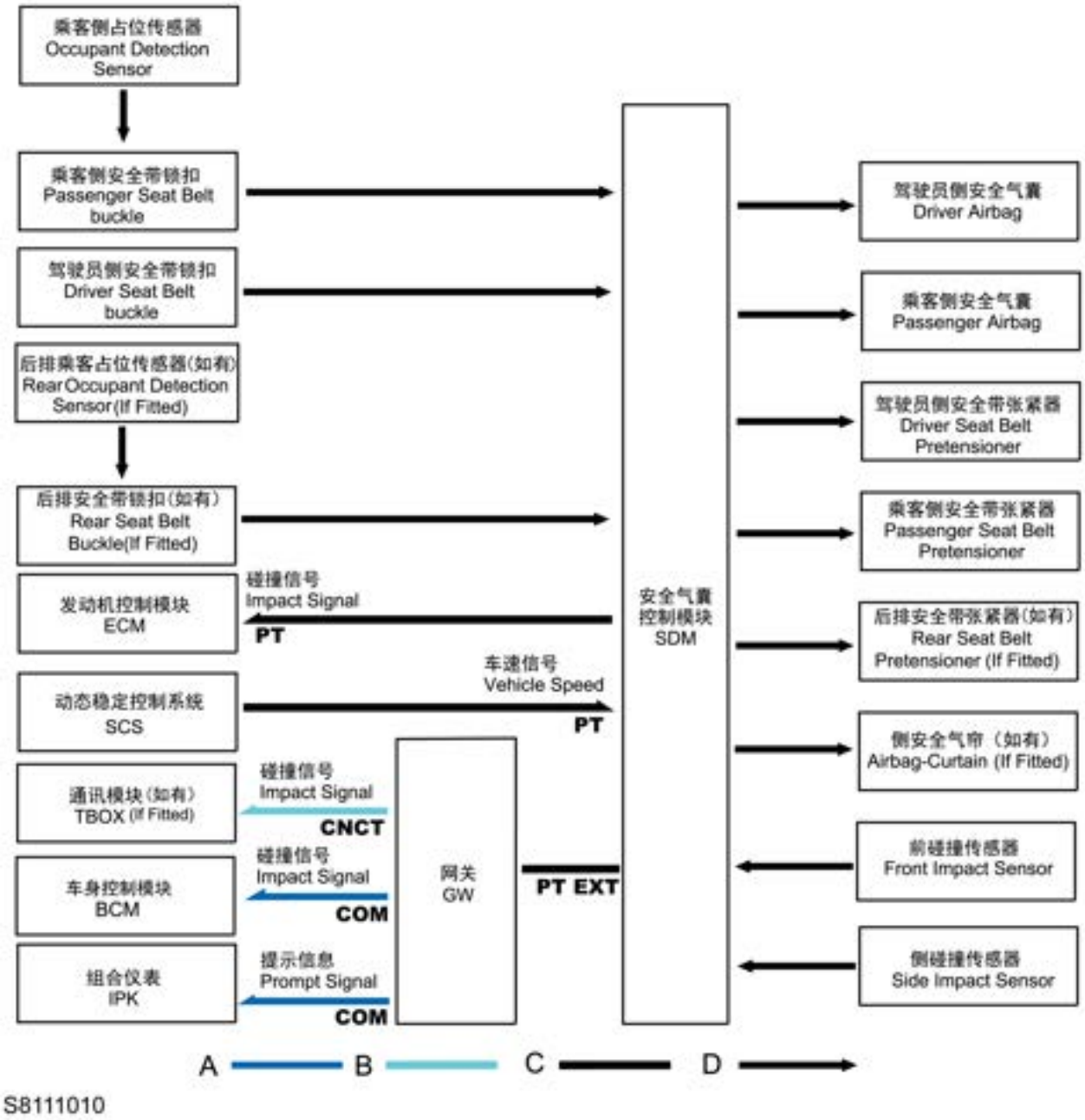

S8111010

A=Comfort CAN line; B=Connect the CAN line; C=Power High Speed/Power Expansion CAN Line; D=Hard wire

Description

Overview

The SRS can enhance passive protection for the passengers when severe impact occurs. This system is usually based on application of the standard protection system (seat belts).

The SRS consists of the following components:

- Supplementary restraint system control unit (SRS ECU)
- Steering Wheel Airbag
- Front Passenger Side Airbag
- Front Seat Side Airbag
- Curtain Airbag
- Seat Belt Pretensioner
- Front Impact Sensor
- Side Impact Sensor
- SRS Warning Lamp (on the IPK)
- Seat Belt Unfastened Warning Lamp (on the IPK)

The SRS ECU is connected to the diagnostic socket via the HS CAN bus.

Side Impact Sensor

The side impact sensor is located below the B pillar lower trim panel and fixed to the body with screws. The sensor is designed with a mounting position for correct refit. Each sensor includes an electronic circuit and a sensing unit. The side impact sensor sends an acceleration signal to the ECU , and the ECU determines whether to trigger it through calculation.

Caution : The side impact sensors must be fitted in the correct orientation, so as to ensure the airbags can work normally at any time.

Front Impact Sensor

The front impact sensor is in the front of engine compartment and is fixed to the radiator bracket by screws. The sensor is designed with a mounting position for correct refit. Each sensor includes an electronic circuit and a sensing unit. The front impact sensor sends an acceleration signal to the ECU , and the ECU determines whether to trigger it through calculation.

Operation

Overview

When the Start switch is in "ON" position, the SRS will be activated.

Frontal Impact

If the frontal impact is severe and exceeds the threshold set in the SRS ECU, the front airbag module and pre-tensioned seat belt will work.

When the accelerometer and frontal impact sensor in the SRS ECU detect any impact, the ECU will produce current to trigger the front airbag module: The driver side front airbag module is activated to expand the airbag. The passenger side front airbag module is activated to expand the airbag.

When the front airbag is fully expanded, it will release the gas immediately from the passage port and provide the passenger moving forward with gradual deceleration, which reduces the risk level of injury to the passengers.

The SRS ECU can determine the type and severity level of the impact. If the front impact detected by the sensor is severe, the SRS ECU will send an ignition signal to the front airbag module and seat belt pretensioner.

Side Impact

Normal operation of the seat side airbag and head curtain airbag depends on whether the severity level of the side impact detected by the side impact sensor and acceleration sensor in the SRS ECU exceeds the threshold for triggering the side impact sensor. When the SRS ECU detects a severe side impact, it will activate the seat side airbag, curtain airbag module and seat belt pretensioner. The triggered gas generator can produce a large quantity of gas to expand the airbag. The expanded airbag will eject from the seat upholstery, similarly, if the head curtain airbag module is triggered, the airbag will eject from the interior trim panel above the door to protect the passenger from head injury. The fully expanded airbag will release excess gas to reduce the level of passenger injury.

Frontal Impact with Angle

When a frontal impact with angle happens, whether the airbag and seat belt pretensioner work depends on the speed and angle of the impact. There are several conditions: The impact is below the threshold of the impact sensor in the SRS ECU, and no airbag or seat belt pretensioner is activated. The speed and angle of impact exceed the triggering threshold of the front impact sensor, and the front driver and passenger airbags and seat belt pretensioners are activated (side airbag may also be triggered).

System Continuity Fault

With the Start switch ON, if any of the following faults occurs in the system, the SRS warning lamp will illuminate: SRS ECU fault Harness fault Ground connection fault Open circuit fault Airbag module fault Seat belt pretensioner fault

If the system detects any failure during driving, the warning lamp will also illuminate to indicate the failure of the SRS system. When the warning lamp illuminates, the SRS may not work when any impact occurs.

With the Start switch ON, the diagnosis function of the SRS ECU will monitor the SRS. If any failure is detected, the SRS ECU will store a related DTC in a nonvolatile memory and output a signal to illuminate the SRS warning lamp. The failure information in the memory may be read out with the scan tool.

Low Voltage Failure

When the voltage supply is not within the specified range, the malfunction indicator lamp will illuminate. The DTC is stored in the memory.

Intermittent Failure

When an intermittent failure occurs, the warning lamp illuminates, and it will be disabled after the failure is eliminated. The warning lamp will not illuminate in the next ignition unless the failure occurs again, but the DTC is still stored in the SRS ECU memory.

Permanent Failure

For a permanent failure, the SRS lamp will illuminate when the test is started, and it will remain on in every subsequent ignition cycle until the cause of the failure is solved. In addition, the diagnosis system will also record the information of the failure occurred. Additional information available by the scan tool through the DLC includes: SRS ECU DTC Version level of hardware and software VIN data

The SRS ECU records fault information in the memory, and the information can be read by connecting the scan tool to the diagnostic socket below the lower trim panel of the driver side instrument panel.

Detailed Information List of Component Pins

End View and Pin Information of SRS ECU

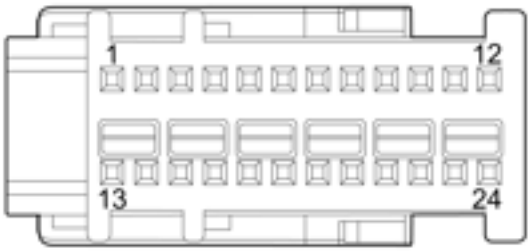

Pin No.	Description
1	KL30
2	-
3	Grounding
4	Driver Seat Belt Buckle Switch Signal
5	Front Passenger Seat Belt Buckle Switch Signal
6	-
7	-
8	Rear Middle Seat Belt Buckle Switch Signal
9	-
10	-
11	IGN Relay
12	-
13	Left Side Curtain Airbag Low
14	Left Side Curtain Airbag High
15	Front Right Airbag High
16	Front Right Airbag Low
17	Right Side Curtain Airbag Low
18	Right Side Curtain Airbag High
19	Front Left Airbag High
20	Front Left Airbag Low
21	Front Passenger Airbag Low
22	Front Passenger Airbag High
23	Driver Airbag High
24	Driver Airbag Low

End View and Pin Information of SRS ECU

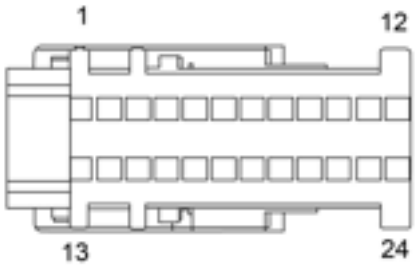

Pin No.	Description
1	Right Front Impact Sensor Low
2	Left Impact Sensor Low
3	CAN H
4	CAN L
5	Rear Left Seat Belt Buckle Switch Signal
6	Rear Right Seat Belt Buckle Switch Signal
7	Right Front Impact Sensor High
8	Left Impact Sensor Cover High
9	Right Impact Sensor Low
10	Right Impact Sensor High
11	Left Front Impact Sensor High
12	Left Front Impact Sensor Low
13	Rear Left Pretensioner Low
14	Rear Left Pretensioner High
15	Front Passenger Tab Pretensioner High
16	Front Passenger Tab Pretensioner Low
17	Rear Right Pretensioner Low

18	Rear Right Pretensioner High
19	Driver Tab Pretensioner High
20	Driver Tab Pretensioner Low
21	Front Passenger Pretensioner Low
22	Front Passenger Pretensioner High
23	Driver Seat Belt Pretensioner High
24	Driver Seat Belt Pretensioner Low

Service Guide

Remove

1. Disconnect the negative battery cable.
2. Open the bonnet and support it firmly.
3. Remove 1 bolt (1) fixing the left/right front impact sensor to the front-end module, disconnect the harness connector (2) and remove the front impact sensor.

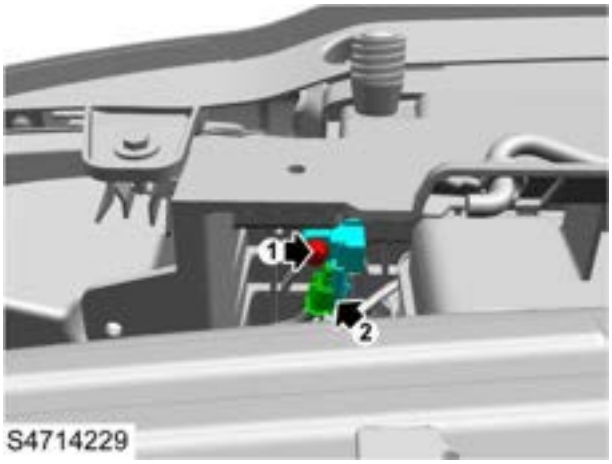

Refit

1. Connect the harness connector of the front impact sensor.
2. Fix the left (right) front impact sensor to the front-end module, fit 1 bolt, tighten it to **7-10Nm** , and check the torque.
3. Restore the bonnet.
4. Connect the negative battery cable.

SRS Side Impact Sensor

Remove

1. Disconnect the negative battery cable.
2. Remove the door sill trim panel.

Door Sill Trim Panel Remove

3. Disconnect the harness connector (1) of the side impact sensor.
4. Remove 1 bolt (2) fixing the side impact sensor to the body, and remove the side impact sensor.

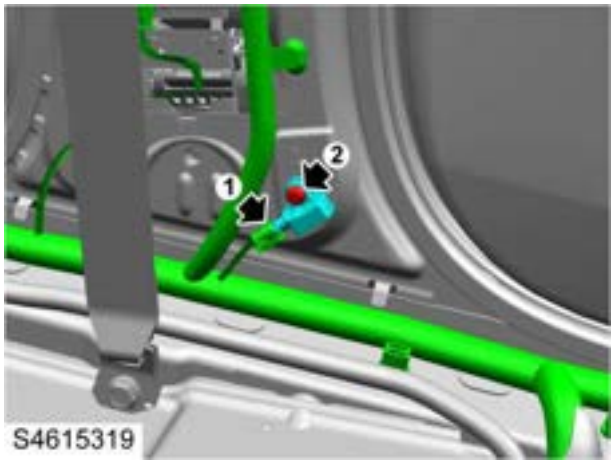

Refit

1. Connect the harness connector of the side impact sensor.
2. Fix the side impact sensor to the body, fit 1 bolt, tighten it to **7-10Nm** , and check the torque.
3. Fit the door sill trim panel.

Door Sill Trim Panel Refit

4. Connect the negative battery cable.

Remove

Warning : It is imperative that the appropriate information is read thoroughly before any work is undertaken on the SRS system.

1. Disconnect the negative battery cable. Wait 10 minutes (that is, after the SRS backup circuit is discharged), then you can start to work.
2. Remove the roof interior.

☞ **Roof Interior Remove**

3. Remove 1 bolt (1) fixing the curtain airbag front tether to the body.
4. Remove 6 bolts (2) fixing the curtain airbag to the body.
5. Separate the connector (3) of the curtain airbag with the hook released, and remove the side curtain airbag.
6. Remove 2 bolts (4) fixing the side curtain airbag gas generator bracket to the body, and remove the side curtain airbag gas generator bracket.

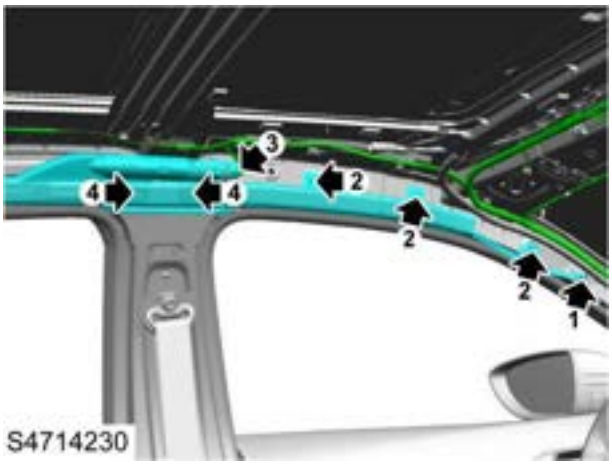

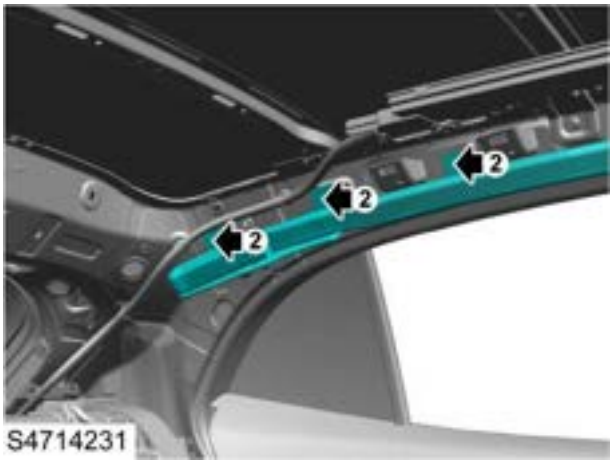

7. Repeat the above steps to remove the curtain airbag on the other side.

Refit

1.

Steering Wheel Airbag

Remove

Warning : It is imperative that the appropriate information is read thoroughly before any work is undertaken on the SRS system.

1. Adjust the steering wheel to the lowest position, adjust the depth of the steering wheel and pull it outwards to the end.
2. Disconnect the negative battery cable. Wait for 10 minutes until the SRS backup circuit is discharged.
3. Follow the arrow directions shown in the figure, insert a flat-bladed screwdriver into the hole to push against 2 lock rings in the left direction of seven o'clock and the right direction of five o'clock, so as to release 2 PINs fixing the airbag to the steering wheel.

S4714224

4. Disconnect the airbag connector, and remove the steering wheel airbag.

Refit

1. Connect the harness connector of the steering wheel airbag.
2. Place the driver airbag in the steering wheel mounting position, with the 2 protruding PINs of the airbag aligned with the 2 concave holes in the steering wheel.
3. Push the steering wheel airbag into the steering wheel until a click can be heard.
4. Connect the negative battery cable. Perform a system check, unlock the vehicle, put the vehicle into the READY state, check if the SRS warning lamp illuminates for several seconds, and then goes out.
5. Restore the steering wheel.

Instrument Panel Airbag

Remove

1. Disconnect the negative battery cable. Wait 10 minutes (that is, after the SRS backup circuit is discharged), then you can start to work.
2. Remove the instrument panel body.

☞ **Instrument Panel Body Remove**

3. Remove 2 screws fixing the instrument panel airbag to the instrument panel, pry open the claws and remove the instrument panel airbag.

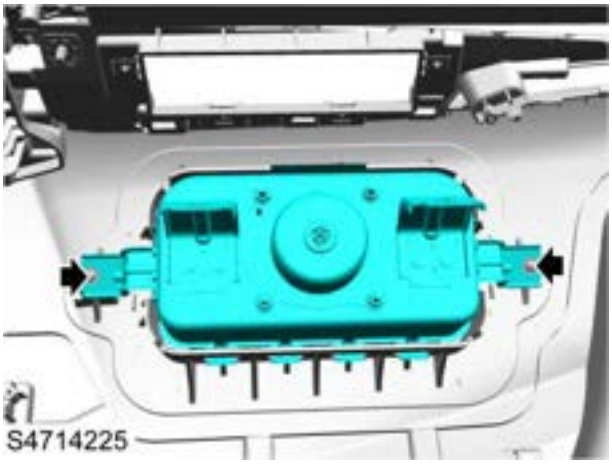

Refit

1. Locate the instrument panel airbag to the upper instrument panel, fix the clamping jaws in place, and ensure that they are secure.
2. Fit and tighten 2 screws fixing the instrument panel airbag to the instrument panel body.
3. Fit the instrument panel body.

☞ **Instrument Panel Body Refit**

4. Connect the negative battery cable. Perform a system check, press the Start switch, and check if the SRS warning lamp illuminates for several seconds and then goes out.

Supplemental Restraint System Sensing and Diagnostic Module

Remove

1. Disconnect the negative battery cable, and wait for 10 minutes until the SDM internal circuit is discharged.
2. Remove the centre console assembly.

Centre Console Assembly Remove

3. Disconnect the harness connector.
4. Remove 3 nuts (1) fixing the SDM to the body, disconnect the harness connector (2), and remove the SDM.

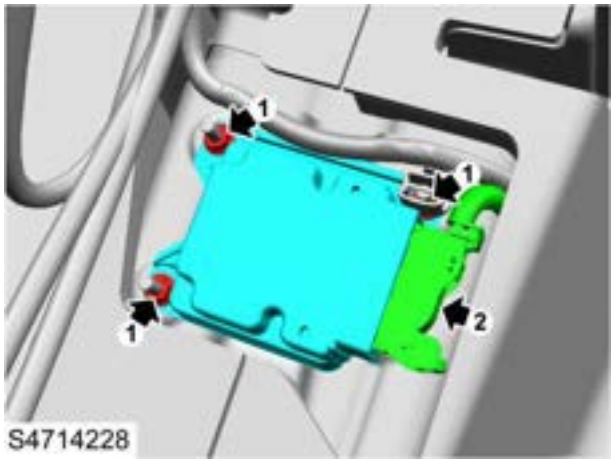

Refit

1. Connect the harness connector of the supplemental restraint system sensing and diagnostic module.
2. Connect the negative battery cable.
3. Programme and encode the supplemental restraint system sensing and diagnostic module (SDM).

Supplemental Restraint System Sensing and Diagnostic Module (SDM)

4. Fix the SDM to the body, fit 3 nuts, tighten them to **7-10Nm** , and check the torque.
5. Fit the centre console assembly.

Centre Console Assembly Refit

Pedestrian Alert Control System

Specification

Torque

Description	Value
Bolt-Pedestrian Warning Speaker to Body	4-6Nm

Description and Operation

System Layout

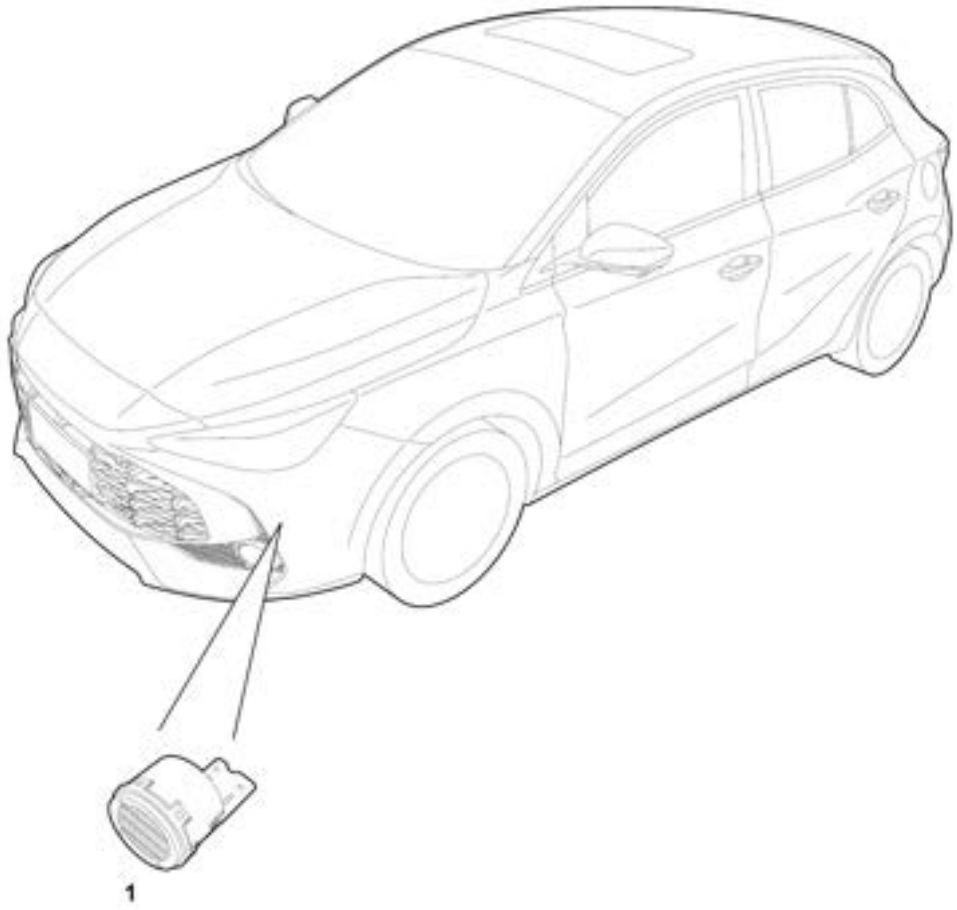

S8180043

1. Pedestrian Alert Speaker

System Control Diagram

S8180044

A = Comfort CAN Bus; B = Hard Wire; C = LIN Bus

Description

Description

When the vehicle is driven with pure electricity at low speed, the pedestrian alert control system can give appropriate prompt sounds to pedestrians, to serve as a warning to them.

The pedestrian alert control system mainly consists of 2 parts: pedestrian alert speakers and entertainment mainframe module.

Operation

Operation

When the vehicle is operating under low speed and pure electric mode, it uses the entertainment mainframe to control the vehicle speakers to send audible alerts to surrounding pedestrians and vehicles, thus improving the driving safety.

Please refer to Owner's Manual for more sounding strategies of the pedestrian alert system.

Detailed Information List of Component Pins

End View and Pin Information of Pedestrian Alert Speaker Connector FC238

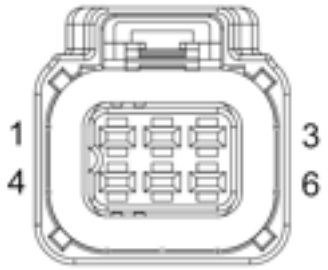

Pin No.	Description
1	Power Supply
2	LIN Bus
3	Ground
4-6	-

Service Guide

Pedestrian Alert Control Speaker

Remove

1. Disconnect the negative battery cable.
2. Remove the left front wheelhouse liner.

☞ **Front Wheelhouse Liner Remove**

3. Remove 2 bolts fixing the pedestrian alert speaker to the body, disconnect the harness connector, and remove the pedestrian alert speaker.

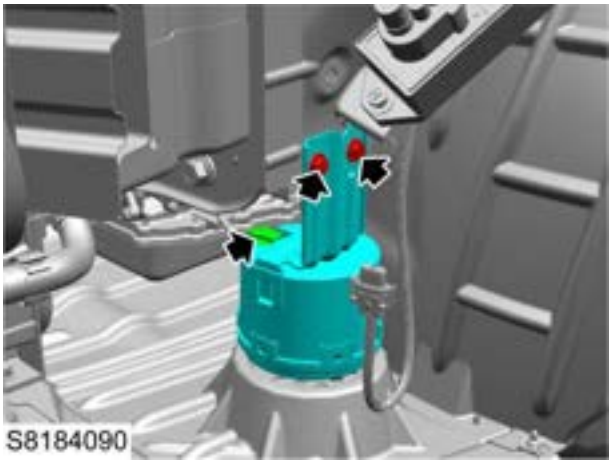

Refit

1. Fix the pedestrian alert speaker to the body, fit 2 bolts, tighten them to **4-6Nm** , and check the torque.
2. Connect the harness connector of the pedestrian alert speaker.
3. Fit the front left wheelhouse liner.

☞ **Front Wheelhouse Liner Refit**

4. Connect the negative battery cable.

Parking Assist System

Description and Operation

System Layout

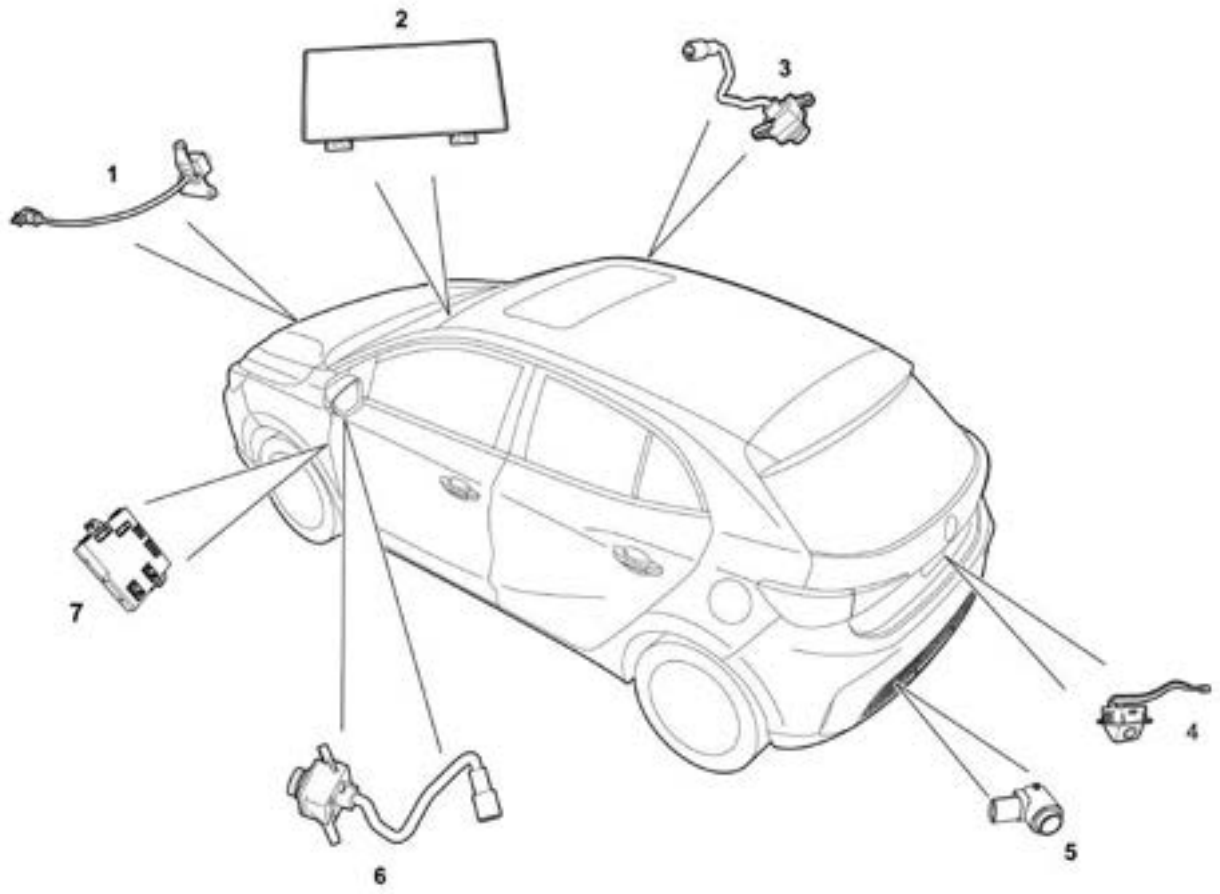

S8110243

1. 360° Panoramic Front View Camera
2. Entertainment Display
3. 360° Panoramic Right View Camera
4. Rear View Camera (including AVM)
5. Rear Ultrasonic Sensor
6. 360° Panoramic Left View Camera
7. Body Control Module

System Control Diagram

Parking Distance Control System Control Diagram

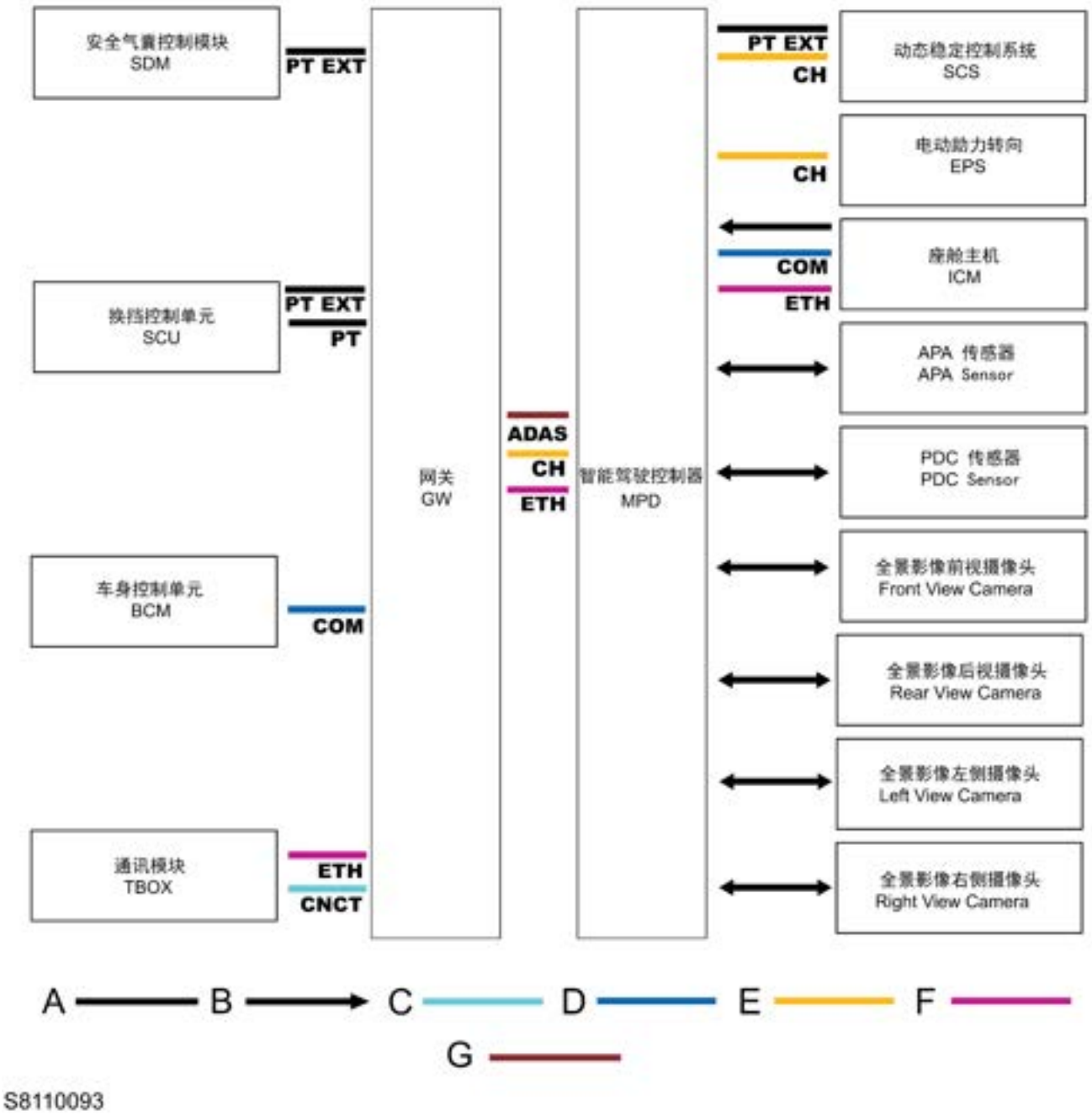

S8110093

A = Power/Power Extension HS CAN Bus; B = Hard Wire; C = Connection HS CAN Bus; D = Comfort HS CAN Bus; E = Chassis HS CAN Bus; F = Ethernet; G = ADAS HS CAN Bus

Description

Overview

Rear Obstacles Detection

When parking the vehicle, if there are obstacles on the way that vehicle has to go through, the Parking Distance Control System (PDC) will give a warning to the driver. The system consists of following parts: ultrasonic sensors, BCM, entertainment mainframe and the speakers controlled by the entertainment mainframe. The ultrasonic sensor monitors the area around the bumper; if an object is detected within the monitoring area, the speaker controlled by the entertainment mainframe will send an acoustic alarm. The system is able to detect relatively hard solid objects and objects like wire fence.

If the vehicle is fitted with rear cameras, the image of the area behind the vehicle will be displayed on the entertainment mainframe.

If the 360° panoramic imaging system is fitted, the image of the area around the vehicle will be displayed on the entertainment mainframe.

Ultrasonic Sensor

The ultrasonic sensors are fixed on the bumper. All the sensors share the same structure, with the colors matching the vehicle.

360° Panoramic Imaging Switch (if equipped)

The 360° panoramic imaging switch is a soft switch inside the entertainment display, pushing the switch can enter the 360° panoramic imaging system display interface to view the image of the area around the vehicle at different viewing angles, so as to provide a safer driving for the driver.

360° Panoramic Imaging System (if equipped)

The 360° panoramic imaging system has four cameras; when the vehicle receives reverse gear signal, or clicking "360" icon, or pulling the steering lever, the entertainment mainframe will enter the panoramic imaging interface, and the user can click the screen to select the field of view to be checked, and allow the driver to learn the blind area around the vehicle body, so as to park the vehicle more intuitively and safely.

1. Front camera: under the vehicle logo.
2. Side camera: under the left/right exterior rearview mirrors.
3. Rear camera: between the two rear license plate lamps.

Operation

Overview

When the reverse gear is selected, the system is activated.

After the ultrasonic sensor receives the reverse gear signal, it outputs signals to the acoustic warning device to make it generate a single audible alarm ("beep"), which shows that the system is activated. Then, it receives the distance information from the ultrasonic sensor and determines whether there is any object in the detection range. If no object is detected within the detection range, it will not issue any audible alarm; if there are objects detected, it outputs signals to the acoustic warning device to produce a repetitive audible alarm.

From the edge of the detection zone, about 1,500mm from the rear vehicle, 600mm from the corner vehicle, the alarm frequency increases with the shortened distance between the object and the vehicle; when the object is 300mm away from the vehicle, the alarm becomes consecutive alarm.

Detection Zone

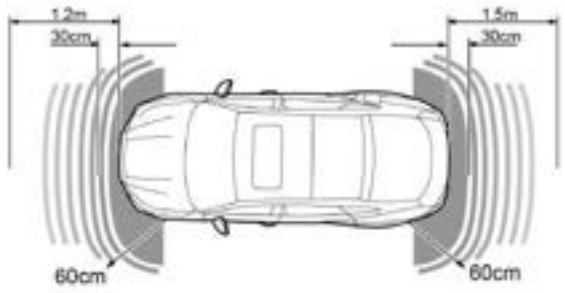

S8413450

Caution : Blind spots, areas where the sensor cannot detect obstructions, may occur if obstructions are present at distances of around 200 mm from the sensors.

Information of Component Pins

End View and Pin Information of 360° Panoramic Control Module Connector BY381

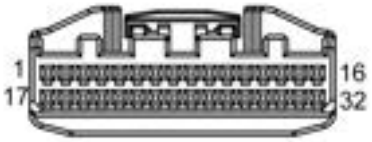

Pin No.	Description
1-3	-
4	360° Panoramic Front Right View Camera Shielded Wire
5-6	-
7	360° Panoramic Front Left View Camera Signal
8	360° Panoramic Front Left View Camera Power Supply
9	360° Panoramic Rear View Camera Shielded Wire
10-11	-
12	360° Panoramic Front View Camera Signal
13	360° Panoramic Front View Camera Power Supply
14	CAN H
15	Ground
16	Power Supply
17-20	-
21	360° Panoramic Front Right View Camera Signal
22	360° Panoramic Front Right View Camera Power Supply
23	360° Panoramic Front Left View Camera Shielded Wire
24 - 25	-
26	360° Panoramic Rear View Camera Signal
27	360° Panoramic Rear View Camera Power Supply
28	360° Panoramic Front View Camera Shielded Wire
29-30	-
31	CAN L
32	Wake-up Enable

End View and Pin Information of 360° Panoramic Control Module Connector BY387

Pin No.	Description
1	360° Panoramic Control Module Signal
2	360° Panoramic Control Module Shielded Wire

End View and Pin Information of 360° Panoramic Rear View Camera Connector BY403

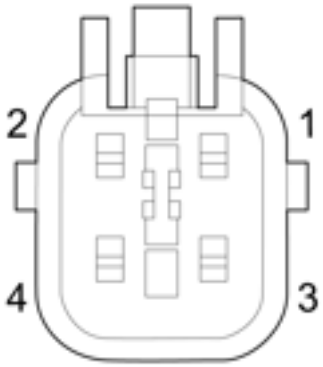

Pin No.	Description
1	-
2	Power Supply
3	Shielded Wire
4	Video Signal

End View and Pin Information of 360° Panoramic Front View Camera Connector FC237

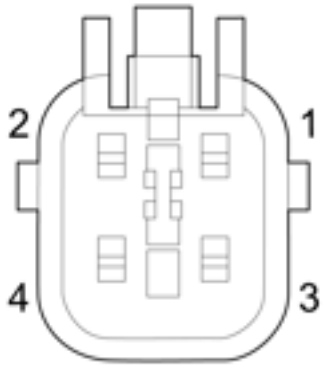

Pin No.	Description
1	-
2	Power Supply
3	Shielded Wire
4	Video Signal

End View and Pin Information of 360° Panoramic Left View Camera Connector DD041

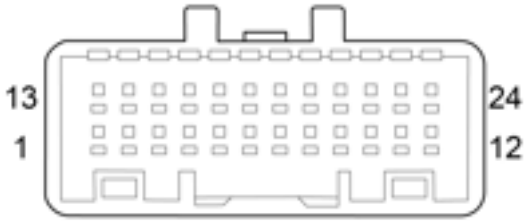

Pin No.	Description
1	Video Signal
2	Power Supply
3	Shielded Wire
4-24	-

End View and Pin Information of 360° Panoramic Right Camera Connector PD031

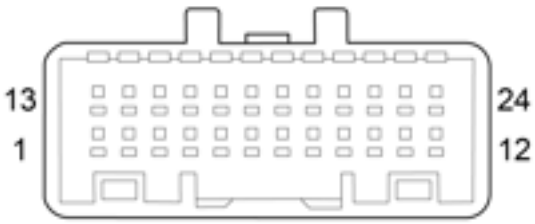

Pin No.	Description
1	Video Signal
2	Power Supply
3	Shielded Wire
4-24	-

End View and Pin Information of Right Rear PDC Sensor Connector RB283

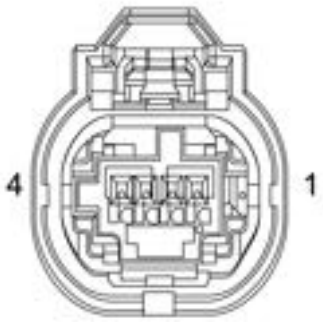

Pin No.	Description
1	Ground
2	-
3	Local LIN Bus
4	Ignition Relay

End View and Pin Information of Left Rear PDC Sensor Connector RB285

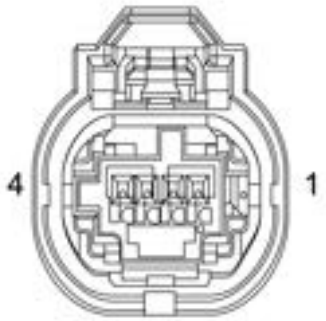

Pin No.	Description
1	Ground
2	Signal
3	Local LIN Bus
4	Ignition Relay

End View and Pin Information of Left Rear Middle PDC Sensor Connector RB293

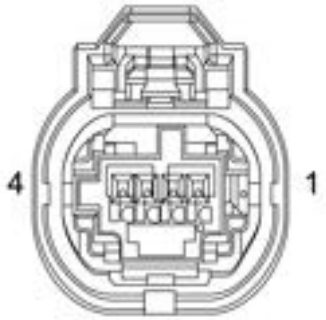

Pin No.	Description
1	Ground
2	Signal
3	Body Control Module LIN Bus
4	Ignition Relay

End View and Pin Information of Right Rear Middle PDC Sensor Connector RB295

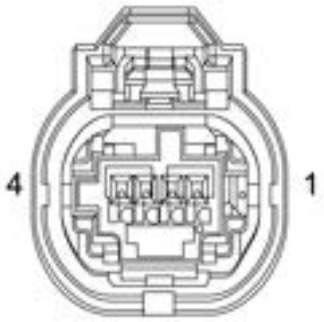

Pin No.	Description
1	Ground
2	Signal
3	Local LIN Bus
4	Ignition Relay

End View and Pin Information of Intelligent Driving System Control Module Connector FA318

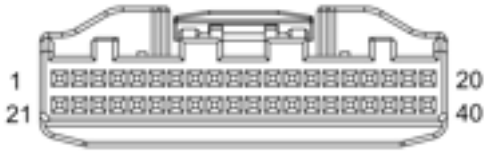

Pin No.	Description
1	ADAS HS CAN H
2	ADAS HS CAN L
3-6	-
7	Rear Left APA Sensor Signal
8	Rear Left Sensor Signal
9	Rear Sensor Power Supply
10	Left Rear Middle Sensor Signal
11	Right Rear Middle Sensor Signal
12	Front Left Sensor Power Supply
13	Rear Right Sensor Signal
14	Right Rear APA Sensor Signal

15	APA Sensor Power Supply
16	IgnRelay
17	Local HS CAN
18	Local HS CAN
19	KL30
20	KL30.2
21 - 22	-
23	Chassis High Speed CAN H
24	Chassis High Speed CAN L
25	-
26	-
27	Front Left APA Sensor Signal
28	Front Left Sensor Signal
29	Front APA Sensor Ground
30	Front Left Middle Sensor Signal
31	Front Right Middle Sensor Signal
32	-
33	Front Right Sensor Signal
34	Front Right APA Sensor Signal
35	APA Sensor Ground
36 - 38	-
39	Ground A
40	Ground 1A

End View and Pin Information of Intelligent Driving System Control Module Connector FA305

Signal	360° Panoramic Signal
Shield	360° Panoramic Shielded Wire

End View and Pin Information of Intelligent Driving System Control Module Connector FA391

Signal	GNSSAnt_SIG
Shield	GNSSAnt_GND

End View and Pin Information of Intelligent Driving System Control Module Connector BY411

1-Signal	360° Panoramic Front Camera Signal
1-Shield	360° Panoramic Front Camera Shielded Wire
2-Signal	360° Panoramic Front Left Camera Signal
2-Shield	360° Panoramic Front Left Camera Shielded Wire
3-Signal	360° Panoramic Front Right Camera Signal
3-Shield	360° Panoramic Front Right Camera Shielded Wire
4-Signal	360° Panoramic Rear Camera Signal
4-Shield	360° Panoramic Rear Camera Shielded Wire

End View and Pin Information of 360° Panoramic Camera Connectors FC244, BY391, DD031 and PD032 - MPD

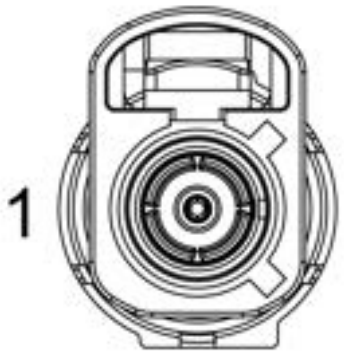

Signal	360° Panoramic Camera Signal
Shield	360° Panoramic Camera Shielded Wire

End View and Pin Information of Front PDC Sensor Connectors FB023, FB024, FB027 and FB026 - APA

Pin No.	Description
1	Power Supply
2	Signal
3	Ground

End View and Pin Information of Rear PDC Sensor Connectors RB284, RB286, RB290 and RB297 - APA

Pin No.	Description
1	Power Supply
2	Signal
3	Ground

End View and Pin Information of Front APA Sensor Connectors FB015 and FB019

Pin No.	Description
1	Power Supply
2	Signal
3	Ground

End View and Pin Information of Rear APA Sensor Connectors RB292 and RB289

Pin No.	Description
1	Power Supply
2	Signal
3	Ground

Service Guide

Rear Ultrasonic Sensor

Remove

1. Disconnect the negative battery cable.
2. Remove the rear bumper.

☞ Rear Bumper Remove

3. Disconnect the harness connector, loosen the clips and remove the rear ultrasonic sensor.

S8115633

Refit

1. Connect the harness connector, insert the rear ultrasonic sensor into the rear bumper, and ensure the clips are fully engaged.
2. Fit the rear bumper.

☞ Rear Bumper Refit

3. Connect the negative battery cable.

360° Panoramic Front View Camera

Remove

1. Disconnect the negative battery cable.
2. Remove the front bumper.

Front Bumper Remove

3. Remove 3 screws fixing the 360° panoramic front view camera to the front bumper, loosen the clip, and remove the 360° panoramic front view camera.

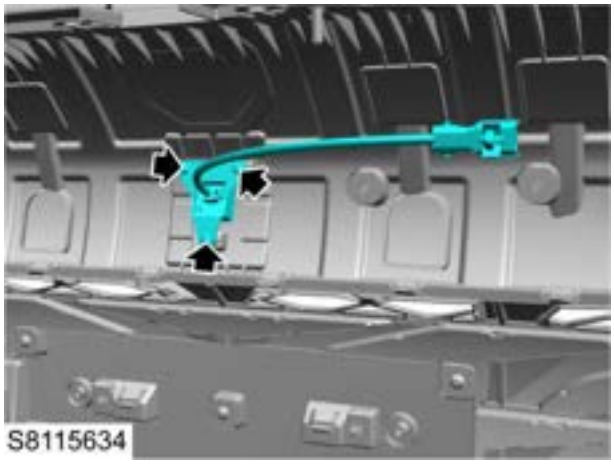

Refit

1. Fix the 360° panoramic front view camera to the front bumper, fit 3 screws, tighten them to **1-2Nm** , and check the torque.
2. Fit the retaining clip.
3. Fit the front bumper.

Front Bumper Refit

4. Connect the negative battery cable.
5. Calibrate the 360° panoramic front view camera.

360° AVM Camera

360° Panoramic Side View Camera

Remove

1. Disconnect the negative battery cable.
2. Remove the side direction indicator lamp.

Side Direction Indicator Lamp Remove

3. Remove 2 screws fixing the 360° panoramic side view camera to the exterior rearview mirror.

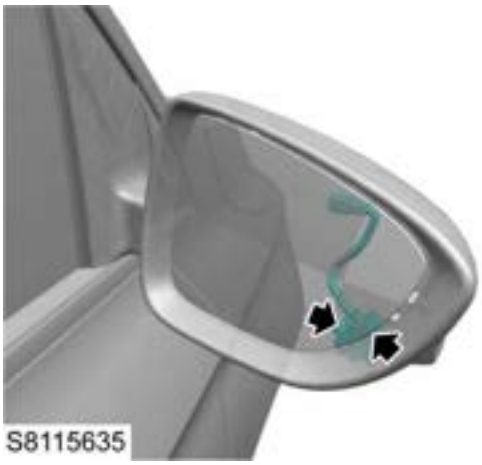

4. Disconnect the harness connector and remove the 360° panoramic side view camera.

Refit

1. Connect the harness connector.
2. Connect the negative battery cable.
3. Fix the 360° panoramic side view camera to the exterior rearview mirror, fit 2 screws and tighten them.
4. Fit the side direction indicator lamp.

Side Direction Indicator Lamp Refit

5. Calibrate the panoramic camera.

360° AVM Camera

AVM Rear Camera

Remove

1. Disconnect the negative battery cable.
2. Remove the tailgate interior trim panel.

Tailgate Interior Trim Panel Remove

3. Disconnect the harness connector (1) of the 360° panoramic rear view camera.
4. Press the clip to remove the 360° panoramic rear view camera (2).

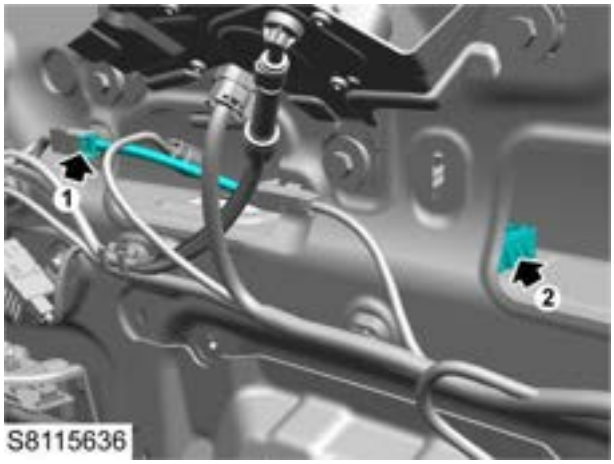

Refit

1. Fit the 360° panoramic rear view camera.
2. Connect the harness connector of the 360° panoramic rear view camera.
3. Connect the negative battery cable.
4. Calibrate the panoramic camera.

360° AVM Camera

5. Fit the tailgate interior trim panel.

Tailgate Interior Trim Panel Refit

Driver Assistance System

Specification

Torque

Description	Value

Description and Operation

System Layout

FVCM System Layout

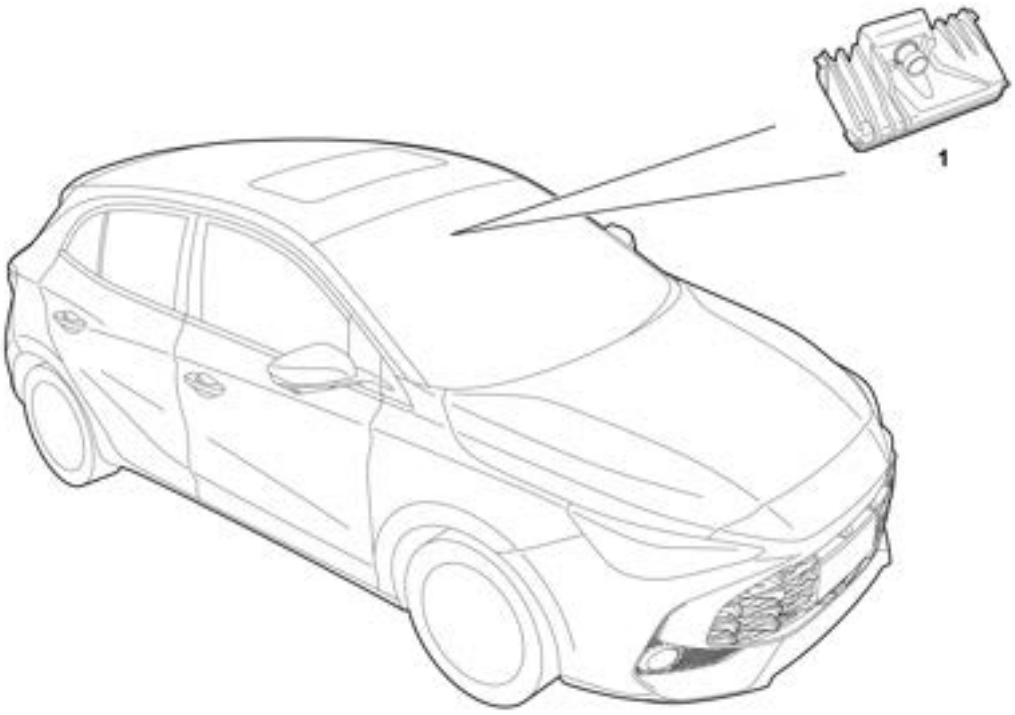

S8160146

1. Front View Camera Module

System Control Diagram

FVCM Control Diagram

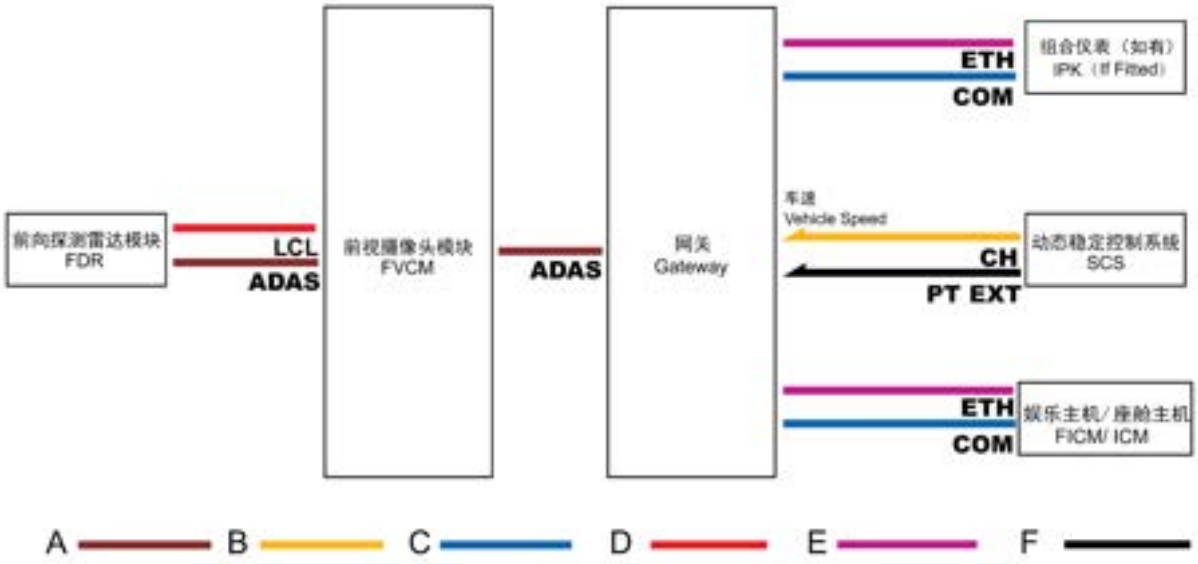

S8161081

A = ADAS HS CAN Bus; B = Chassis HS CAN Bus; C =Comfort HS CAN Bus; D = Local CAN Bus; E = Ethernet; F = Power/Power Extension CAN Bus

Description

The driver assistance system can detect the road and environmental information ahead of the vehicle with the front view camera located at the upper middle of the front windscreen (in the interior rearview mirror base cover) and the forward detection radar located on the front beam, provide the warning messages or intervene the vehicle when certain conditions are met to help the driver control the vehicle more safely and reliably.

The driver assistance system consists of the following components:

- Front View Camera Module
- Rearward Driver Assistance Module
- Driver Assistance System Switch

Front View Camera Module

The front view camera generally consists of the camera lens, PCB assembly, housing, rear cover, label, bracket and so on. The image sensor completes the conversion of the optical signal collected by the lens to the electrical signal and the image processing and information acquisition in the image processing chip.

Driver Assistance System Switch

The relevant functions of the driver assistance system can be turned on, off or set by operating the function switches on the entertainment screen. Some functions also need to be operated through the switch on the left side of the driver's steering wheel.

Operation

Lane Keeping Assist System

The lane keeping assist system detects the lane lines ahead via the front view camera. When certain conditions are met, if the wheel is about to be or is already on a line, or the vehicle is about to be or is already on the curb, or the opposite vehicle in the adjacent lane is close to the middle lane line, the system will send a warning to remind the driver to correct the direction in time to make the vehicle drive within the lane lines; or apply the corrective steering intervention and give a prompt to assist the driver to keep the vehicle driving within the lane lines or make an emergency avoidance.

Adaptive Cruise Control System

The adaptive cruise control system can enable the vehicle to conduct constant speed cruise within certain speed range, or conduct car-following cruise by setting the distance.

Traffic Jam Assist System

The traffic jam assist system works on the basis of the adaptive cruise system. If the lane lines ahead on both sides are clear, the system will assist the vehicle in driving within the lane lines; when driving at a low speed, if there is a vehicle ahead, the system will assist the vehicle in following the track of the vehicle in front.

Forward Collision Assist System

When the system detects a risk of collision between the vehicle and the vehicle or pedestrian ahead, it will remind the driver to decelerate in time to keep a relatively safe distance and speed with the vehicle or pedestrian ahead; or automatically enable the brake system to intervene to decelerate the vehicle and avoid collisions or mitigate the damage of collision accidents.

Service Guide

Front View Camera

Remove

1. Disconnect the negative battery cable.
2. Remove the interior rearview mirror cover.
3. Disconnect the harness connector of the front view camera module.
4. Use a tool to carefully pry off the clips.

Caution : To prevent the entry of impurities or water vapour, please cover the holes on the camera and camera bracket with pasters immediately when removing front view camera module.

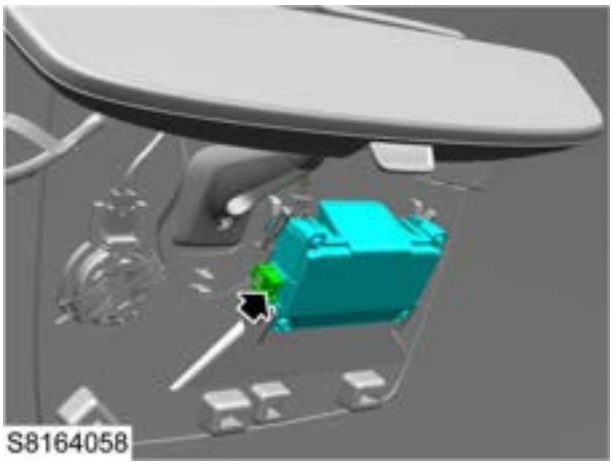

Refit

1. Fit the front view camera module and secure it with clips.

Caution : To prevent the entry of impurities or water vapour, please complete the installation of front view camera module in 10 seconds after uncovering the pasters.

2. Connect the harness connector of the front view camera module.
3. Fit the interior rearview mirror cover.
4. Connect the negative battery cable.
5. Perform a self-learning for front view camera module.

☞ Front View Camera Module (FVCM)

Rearward Driver Assistance System

Specification

Torque

Description	Value
Screw-RADAR to Bumper	1-1.4Nm

Description and Operation

System Layout

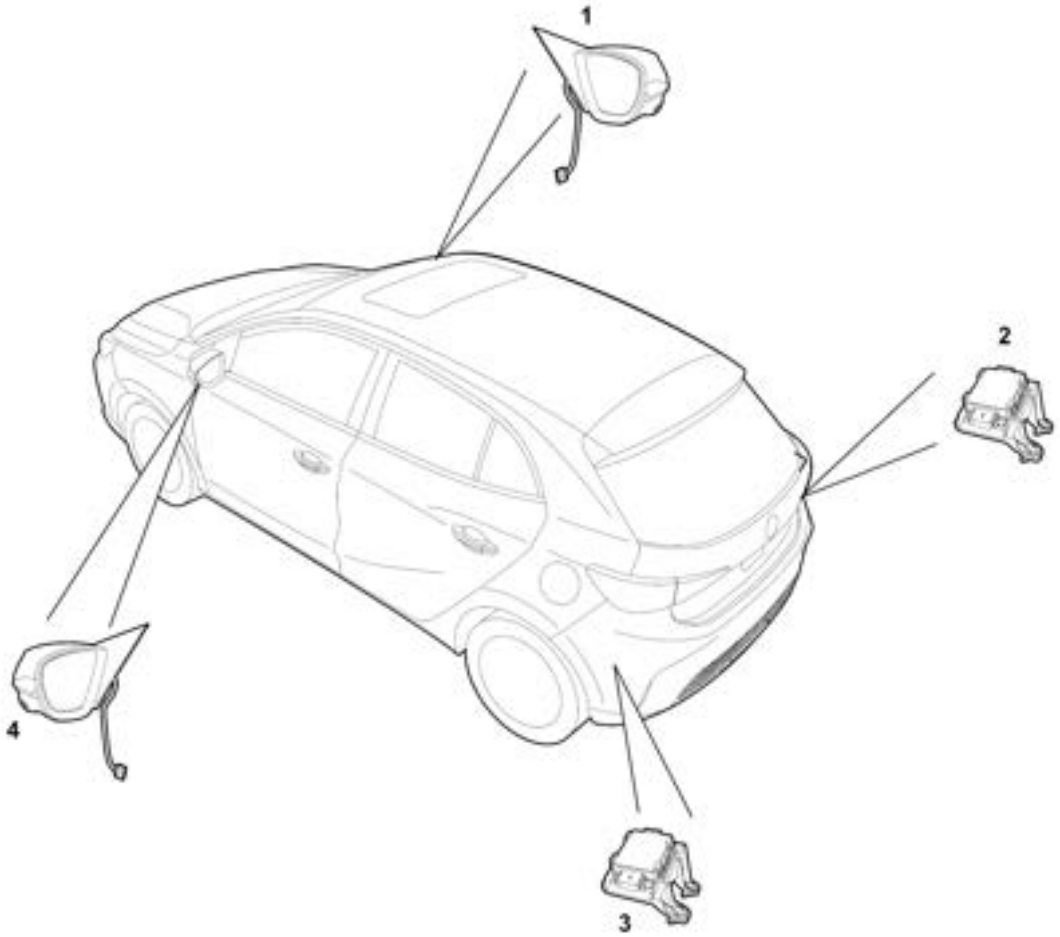

S8110239

1. Right Blind Spot Monitoring Indicator - Exterior Rearview Mirror
2. Right Rearward Driver Assistance Control Module
3. Left Rearward Driver Assistance Control Module
4. Left Blind Spot Monitoring Indicator - Exterior Rearview Mirror

System Control Diagram

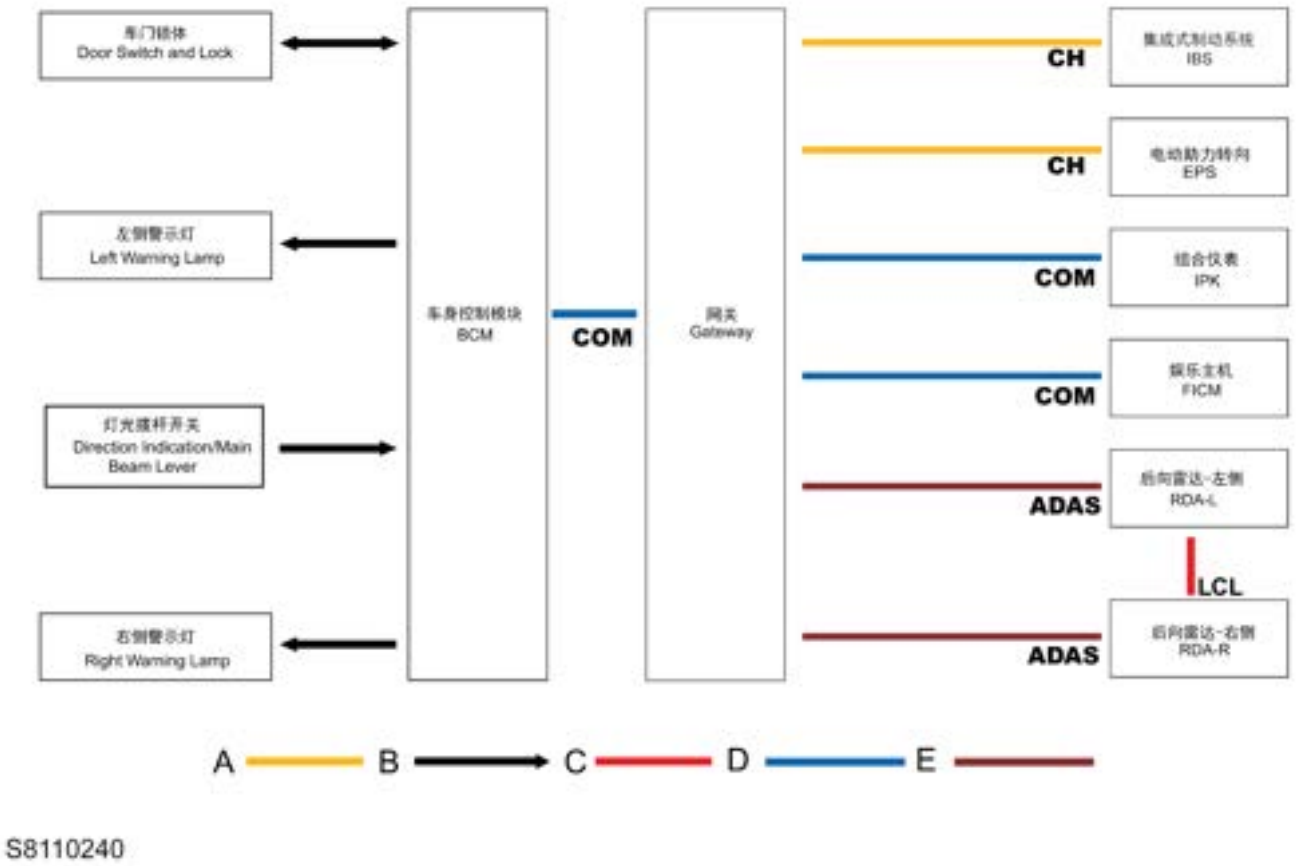

S8110240

A = Chassis HS CAN Bus; B = Hard Wire; C = Local CAN Bus; D = Comfort CAN Bus; E = ADAS CAN Bus

Description

System Overview

The vehicle is fitted with two rear radars at the corner of the bumper to monitor vehicles in the adjacent lane and area behind. When a moving object is detected in the alert state, a warning will be issued. The warning signal from the rear radar is used by the BCM to activate the warning lamps mounted around the exterior rearview mirrors to warn of the danger monitored on the corresponding side, with the flashing and long light of warning lamps corresponding to different levels of warning. The driver is reminded of the operating status of the RDA system by the entertainment system's audible and visual alarms. For the RCTB function, the IBS enables emergency braking function in dangerous reverse scenarios.

There are differences in the rearward driver assistance functions equipped in vehicles of different configurations.

Blind Spot Detection (BSD)

The function of the BSD system is to monitor the vehicle's blind spot (adjacent vehicle). When changing lanes or potentially changing lanes, the driver will be alerted by a warning if a potential collision is detected. This helps to avoid traffic accidents and dangers caused by blind spots.

Lane Change Assist (LCA)

The LCA subsystem is capable of monitoring dangerous targets in the adjacent lane of the vehicle. And it alerts drivers with visual signals before changing lanes to prevent potential collision hazards. You can choose whether to use this function or not through the menu.

Rear Cross Traffic Alert (RCTA)

Monitor dangerous targets located in the side and rear areas of the vehicle when reversing and alert the driver with visual and audible signals to prevent potential collision hazards. You can choose whether to use this function or not through the menu.

Rear Cross Traffic Brake (RCTB)

Monitor dangerous targets located in the side and rear areas of the vehicle when reversing and alert the driver with visual and audible signals. If the driver does not intervene with braking or if the brakes are not strong enough, the system applies emergency braking depending on the level of danger to prevent the risk of collision. You can choose whether to use this function or not through the menu.

Door Open Warning (DOW)

The DOW subsystem is capable of monitoring obstacles within the opening range of the vehicle's side doors. When the driver and passengers want to open the door, the driver and passengers are alerted by flashing the atmosphere lamp on the door handle to prevent potential collision hazards. You can choose whether to use this function or not through the menu.

Rearward Collision Warning (RCW)

During the driving process, when the target such as other vehicles in this lane approaches the vehicle and there is a risk of collision, the rearward collision warning function (RCW) issues an alarm to alert the driver that there is a dangerous target approaching, and at the same time, it can prompt the vehicles behind to drive safely.

Operation

System On and Off

The rearward driver assistance (RDA) system switch is a soft key on the entertainment display, which can be used to turn on or off the rearward driver assistance system or its subsystems after the display goes into the "Rear Driver Assistance System Settings" interface in the "Vehicle Settings" interface.

When the "Rearward Driver Assistance System" is on, its subsystem options can be set accordingly. When the "Rearward Driver Assistance System" is off, its subsystem options will be inoperable, and the rearward driver assistance system will be off.

System Operation

When the function of each subsystem is turned on, if the subsystem activation conditions are met, the system will alert the driver or the passenger through the warning lamps, to safely use the vehicle.

Refer to the User Manual for detailed activation conditions or warning strategies.

Service Guide

Remove

1. Disconnect the negative battery cable.
2. Remove the rear bumper.

☞Rear Bumper Remove

3. Remove 3 screws fixing the left/right rear corner radar and its bracket to the body, disconnect the harness connector and remove the rear corner radar and its bracket.

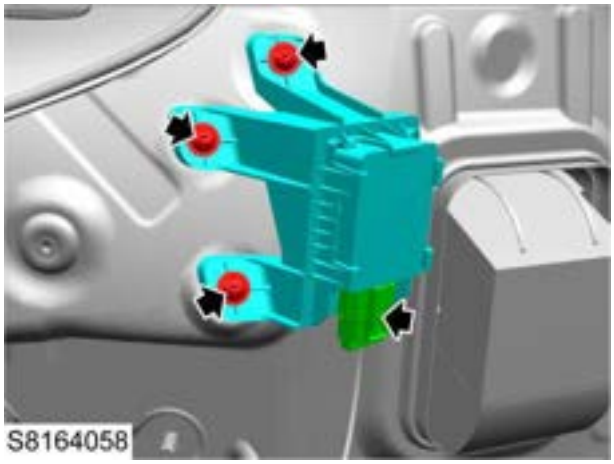

4. Loosen the clip, and remove the left/right rear corner radar.

Refit

1. Fix the left (right) corner radar to bracket and ensure the clips are fully engaged.
2. Fix the left (right) rear corner radar and bracket to the rear bumper, fit 3 screws, tighten them to **1-1.4Nm** , and check the torque.
3. Fit the rear bumper.

☞Rear Bumper Refit

4. Connect the negative battery cable.
5. Programme and encode the rearward driver assistance control module.

☞ Rearward Driver Assistance System (LHRDA/RHRDA)

Passive Entry and Passive Start System

Description and Operation

System Layout

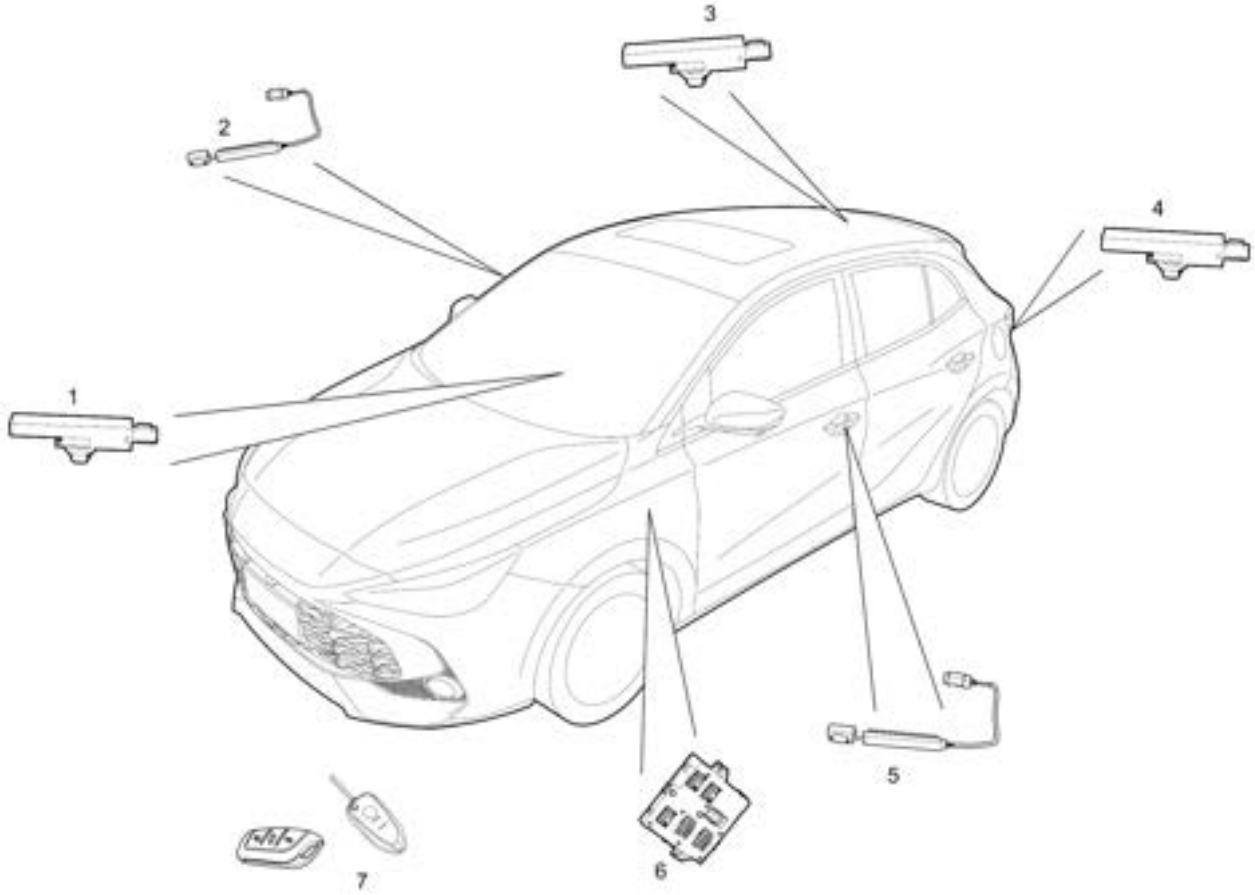

1. Passive Entry and Passive Start Antenna - Front
2. Passenger Side Exterior Door Handle Switch
3. Passive Entry and Passive Start Antenna - Rear
4. Passive Entry and Passive Start Antenna - Rear Bumper Fascia
5. Driver Side Exterior Door Handle Switch
6. Body Control Module
7. Keys

System Control Diagram

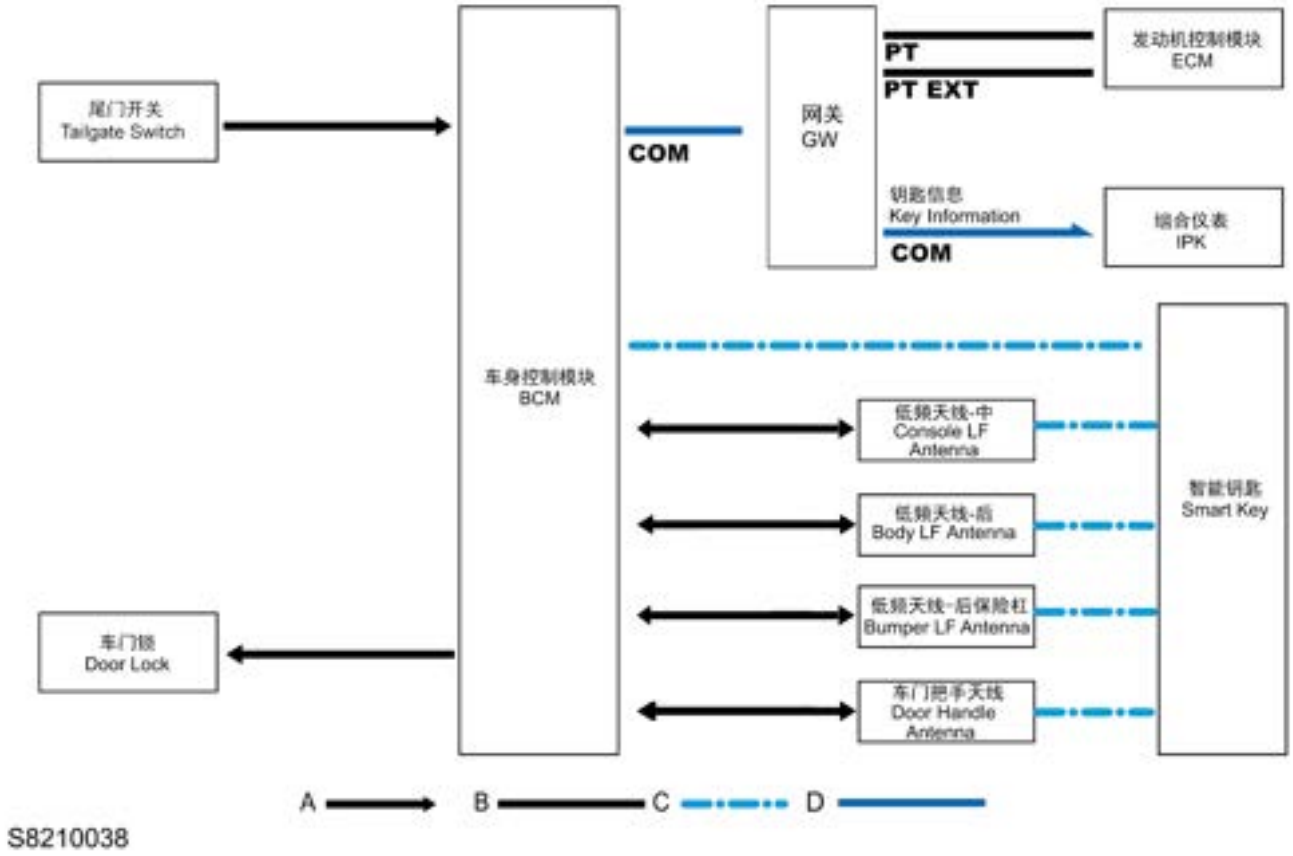

A = Hard Wire; B = Power HS/Power Extension CAN Bus; C = RF Signal; D = Comfort CAN Bus

Description

PEPS System Overview

For vehicles withPEPS system, the traditional key is replaced by the smart key, and the operation of PEPS is achieved by LF/RF (wireless) communication between the smart key and the vehicle.

- Passive entry: No action is required for the smart key. You just need to take the smart key with you, and you can enter into your vehicle by simply pressing the button on the door handle and pulling the handle.
- Passive start: Without inserting/pulling out the key, you just need to put the smart key in the vehicle and press the Start switch to start/stop the vehicle.

ThePEPS system includes: smart key, exterior door handle switch, interior middle antenna, interior rear antenna, rear bumper upholstery antenna and door handle antenna.

Operation

In the vicinity of the closed door and in the driver compartment, the system can detect and identify the smart key.

Function ofCAN Bus in PEPS

TheBCM communicates with other modules via theCAN bus.

Identifier/Smart Key

The smart key is a hand-held electronic device which is powered by the lithium battery. Each vehicle is provided with matching smart keys. Once the match is finished, the smart key can perform LF/RF communication in the system. As long as the lithium battery provides power, the smart key can receive LF signal and communicate with theBCM to lock/unlock and start the vehicle.

The smart key detects the LF electromagnetic field signal from the vehicle LF antenna and exterior door handle antenna/switch, and gives a response when it appears in the coverage area of the LF antenna.

Function of Smart Key inPEPS

The Passive Entry or Passive Start (PEPS) shall have a smart key.

- PE mode (passive entry): the smart key receives the LF signal and sends the RF signal to complete the authentication and match in the LF coverage area.
- Remote key entry mode: when pressing the button on the key, the authentication code transmitted by the RF signal will be used as the LOCK/UNLOCK request for the door or tailgate.
- Low battery mode of the smart key battery: the smart key is provided with a mechanical key matching the vehicle lock; use the mechanical key to lock/unlock the vehicle.

Effect of Smart Key on Vehicle Start

- PS mode (passive start): the smart key receives the LF signal and sends the RF signal to perform the authentication and match.
- Low battery mode of the smart key: the smart key shall be close to the spare coil. Then, use theBCM to perform the authentication of the smart key in the transponder mode.

Identifier/Smart Key

The system permits to handle 4 identifiers at one time.

For delivery, a matching smart key is provided, and the smart key can be added or deleted viaBCM during the after-sales diagnosis.

Exterior Door Handle Switch

Exterior door handle switch is an assembly of the LF antenna and switch. Generate current for the LF antenna to form the magnetic field. The status of the switch is read (i.e. the action of the operator is detected).

Function of Exterior Door Handle Button Switch inPEPS

The LF antenna generates an LF electromagnetic induction area near the door so that the user can lock/unlock the door. Only when a matching smart key is detected by the vehicle in the LF antenna coverage area, and the LOCK/UNLOCK request received matches the status of the door lock, can the lock and unlock operation be performed.

After the user finishes the operation of the button switch on the door handle, theBCM will drive the LF antenna to generate the electromagnetic field signal. The user's smart key can detect/receive the electromagnetic field signal and give a response to theBCM by the RF signal, and thePEPS system validates the legality of the key and unlock the door eventually, this ensures access of the legal user.

LF Antenna

The independent LF antenna consists of 2 internal LF antennas and 1 LF antenna of the rear bumper fascia. To ensure the smart key can receive the LF signal in the coverage area of antenna, the antenna generates the LF magnetic field signal.

Function of LF Antenna inPEPS

The LF antenna transmits LF signal in thePEPS and communicates with the smart key.

Internal LF Antenna

The internal LF antenna is necessary for the passive start system, which sends the LF signal to the smart key, and the feedback RF signal sends the authentication information toBCM ; after the authentication, the vehicle can be started.

The internal LF antenna can also be used to search the smart key in the driver compartment and determine if the vehicle can be locked, this prevents the user from leaving the smart key in the vehicle when locking the vehicle.

LF Antenna of Rear Bumper Fascia

In the passive entry system, the antenna of the rear bumper fascia is used to separately open the tailgate, and can not be used for keyless start. The rear bumper fascia antenna sends the LF signal to the smart key near the tailgate, and the smart key returns RF signal to theBCM . After the authentication ofBCM , unlock the tailgate. The bumper fascia antenna radiation area is an area with a radius of 1m away from the center of rear bumper.

If the smart keys is simultaneously covered by the LF signal in the internal antenna and the LF signal of rear bumper fascia antenna, the smart key will not unlock the tailgate or the vehicle.

Start Switch

Used to request start and stop operations of the vehicle. When the vehicle does not start, different power modes (ACC, ON) can be selected.

Function of Start Switch inPEPS

The Start switch is used to start/stop the vehicle or switch the vehicle power status to ACC or ON and indicate the power status of the vehicle.

The Start switch is used for the passive start system, and it does not work for the passive entry system.

BCM and Peripheral Equipment

The RF signal from the smart key is received by the RF receiver embedded in theBCM , in the keyless entry and start modes, theBCM matches and authenticates the current smart key.

Detailed Information List of Component Pins

End View and Pin Information of Front LF Antenna Harness Connector BY148

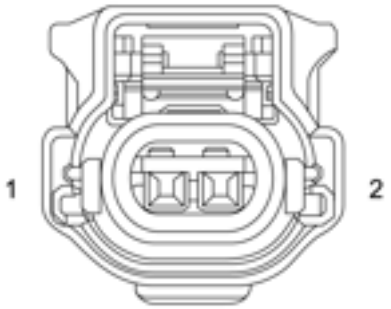

Pin No.	Description
1	Middle LF Antenna Signal - High
2	Middle LF Antenna Signal - Low

End View and Pin Information of Middle LF Antenna Harness Connector CS013

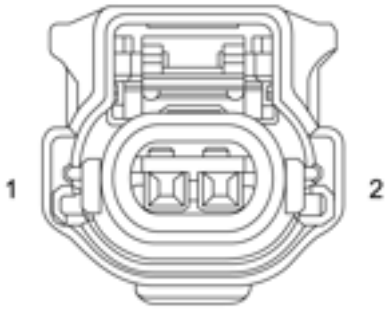

Pin No.	Description
1	Middle LF Antenna Signal - High
2	Middle LF Antenna Signal - Low

End View and Pin Information of Rear LF Antenna Harness Connector BY073

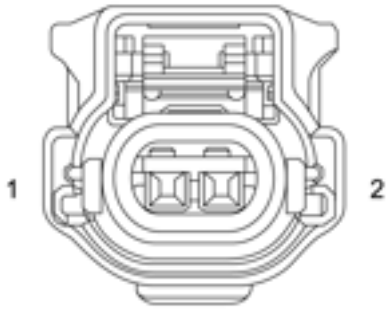

Pin No.	Description
1	Rear LF Antenna Signal - High
2	Rear LF Antenna Signal - Low

End View and Pin Information of Rear Bumper Fascia Antenna Harness Connector BY052

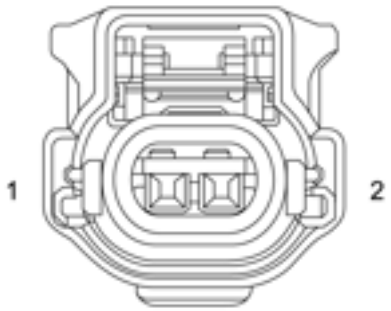

Pin No.	Description
1	Rear Bumper Fascia Antenna Signal - High
2	Rear Bumper Fascia Antenna Signal - Low

Service Guide

Passive Entry and Passive Start Antenna - Front

Remove - Front

1. Disconnect the negative battery cable.
2. Remove the centre console assembly.

Centre Console Assembly Remove

3. Loosen the clips, disconnect the harness connector, and remove the PEPS antenna - front.

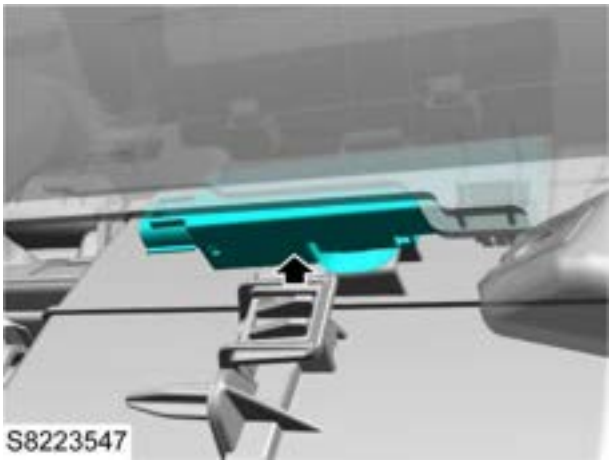

Refit - Front

1. Connect the harness connector.
2. Locate the antenna, align it with the mounting hole and press it down to engage.
3. Fit the centre console assembly.

Centre Console Assembly Refit

4. Connect the negative battery cable.

Passive Entry and Passive Start Antenna - Centre

Remove - Middle

1. Disconnect the negative battery cable.
2. Remove the centre console assembly.

☞ Centre Console Assembly Remove

3. Loosen the clips, disconnect the harness connector, and remove the PEPS antenna - middle.

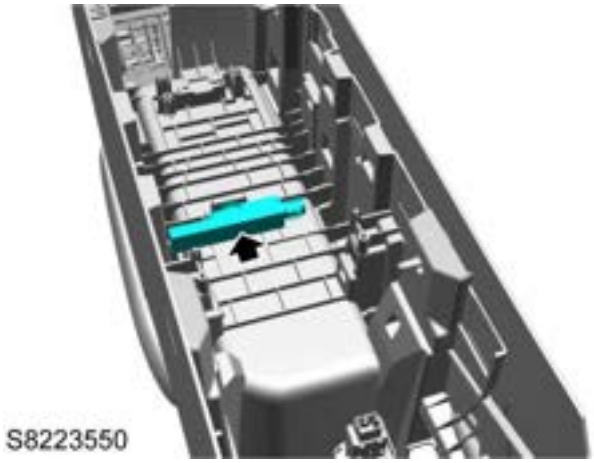

Refit - Middle

1. Locate the antenna, align it with the mounting hole and press it down to engage.
2. Connect the harness connector of the antenna.
3. Fit the centre console assembly.

☞ Centre Console Assembly Refit

4. Connect the negative battery cable.

Passive Entry and Passive Start Antenna - Rear

Remove

1. Disconnect the negative battery cable.
2. Fold the rear seat back and lift the trunk carpet.
3. Loosen the clips, disconnect the harness connector, and remove the PEPS antenna - rear.

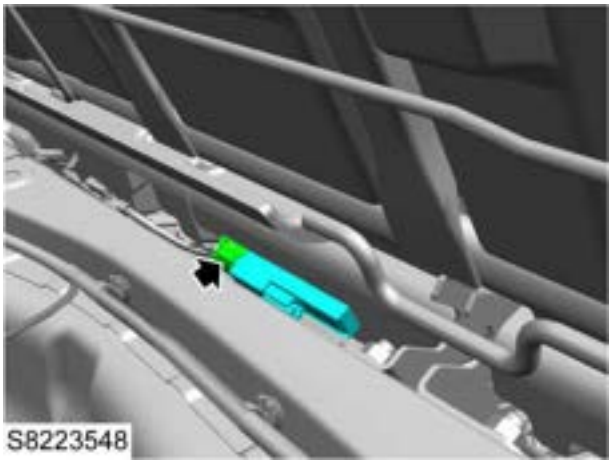

Refit

1. Locate the antenna, align it with the mounting hole and press it down to engage.
2. Connect the harness connector of the antenna.
3. Fit the trunk carpet, and restore the rear seat back.
4. Connect the negative battery cable.

Passive Entry and Passive Start Antenna - Rear Bumper Fascia

Remove

1. Disconnect the negative battery cable.
2. Remove the rear bumper.

Rear Bumper Remove

3. Loosen the clips, disconnect the harness connector, and remove the PEPS antenna - rear bumper fascia.

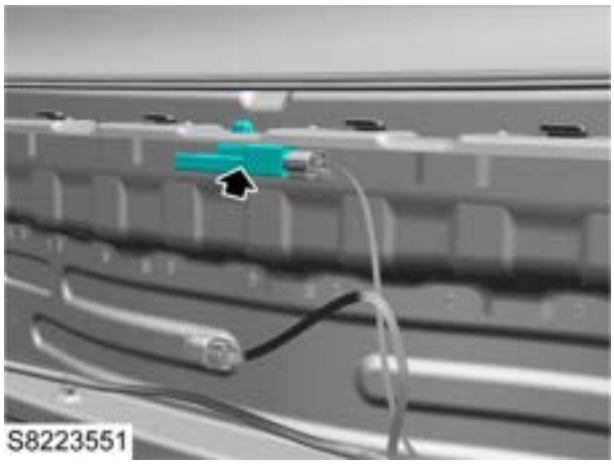

Refit

1. Locate the antenna, align it with the mounting hole and press it down to engage.
2. Connect the harness connector of the antenna.
3. Fit the rear bumper.

Rear Bumper Refit

On-board Telephone, Entertainment and Navigation System

Specification

Torque

Description	Value
Screw- Display to Instrument Panel	1.4-1.8NM
Screw-Multi-range Speaker to Front Door	1-2NM
Screw-Multi-range Speaker to Rear Door	1-2NM
Screw-E-Call to Driver Knee Applique	1.4-1.8NM
Bolt-TBOX to Instrument Panel beam	7-10NM
Screw-TBOX Antenna to Instrument Panel beam	0.8-1.2NM
Bolt-Radio Antenna Coil to tailgate	7-10NM
Bolt-Amplifier Radio Antenna to Body	7-10NM

Description and Operation

System Layout

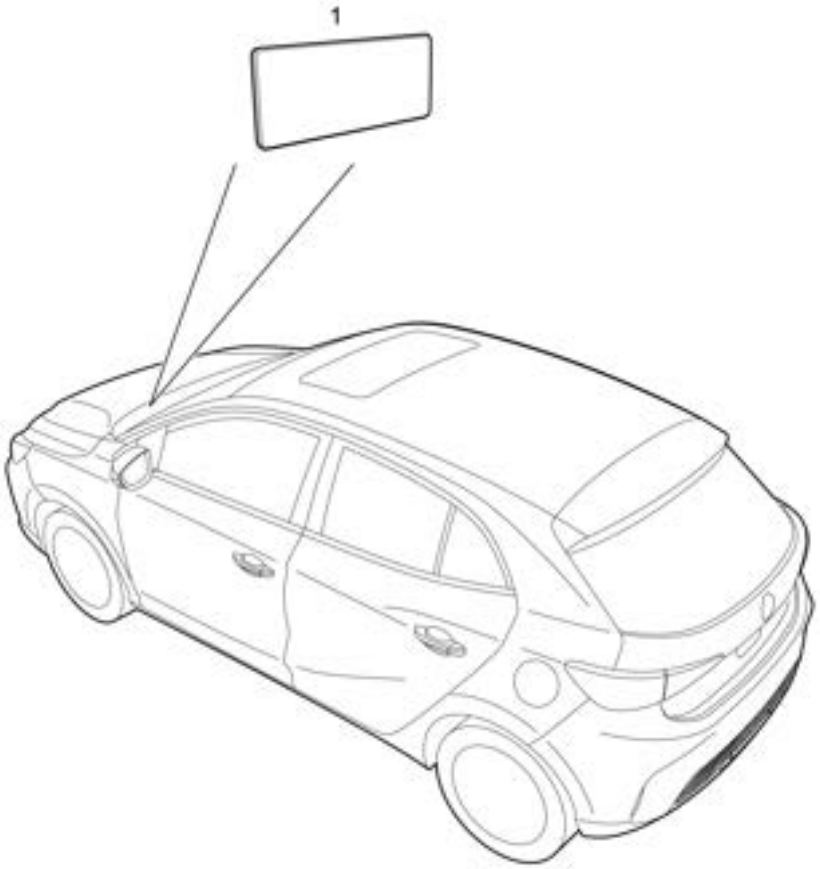

S7310098

1. Instrument Pack

System Control Diagram

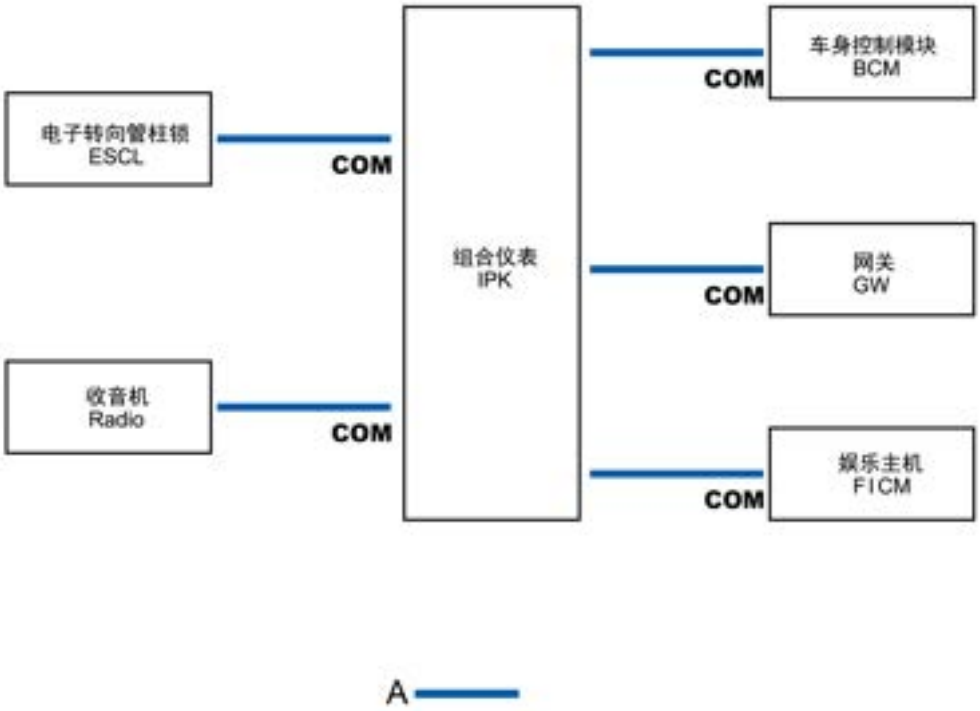

S7310101

A = Comfort CAN Bus

Description

Overview

Entertainment mainframe supports radio, USB, bluetooth phone, video, etc.

Audio Control Buttons on Steering Wheel

The audio device can be controlled by the remote switch on the steering wheel. These function buttons allow the most common functions in theICE system to be used in a much more convenient manner.

S7313390

Display

The display shows the audio information and relevant information.

Woofer

The woofers are in the four vehicle doors, which are fixed on the door panel by 3 screws.

S7313401

Tweeter

The front tweeter is fitted in the front door quarter window and fixed with clips.

S7313400

Communication Antenna

The communication antenna is fitted on the instrument desk.

S7313411

Communication Module

The communication module is fitted behind the front passenger glove box.

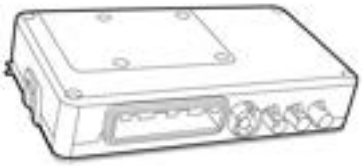

S7313413

Operation

For more information about the operation of the entertainment system, please refer to "User Manual" and the operating instructions inside the entertainment mainframe.

Detailed Information List of Component Pins

End View and Pin Information of Entertainment Mainframe Connector

End View and Pin Information of Low Configuration Entertainment Mainframe Harness Connector:

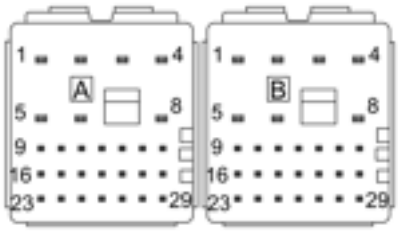

Pin No.	Description	Pin No.	Description
A1	Left Front Speaker -	B1	Right Rear Speaker +
A2	Left Front Speaker +	B2	Right Rear Speaker -
A3	Right Front Speaker +	B3	Left Rear Speaker +
A4	Right Front Speaker -	B4	Left Rear Speaker -
A5-6	Ground	B5-B6	Power Supply
A8-16	-	B8	ACC
A16	Bluetooth Phone/ Speech Recognition +	B9-B13	-
A17	Bluetooth Phone/ Speech Recognition -	B14	High Speed CAN Communication
A18-A29	-	B15	High Speed CAN Communication
		B16-22	-
		B23	LIN
		B24	Deformed Screen Enable
		B25-B29	-

End View and Pin Information of Harness Connector (Radio with Low Configuration):

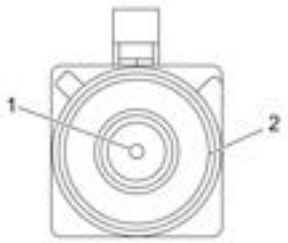

Pin No.	Description
Signal	RBRM Antenna Signal
Shield	Radio Antenna Shielded Wire

End View and Pin Information of Low Configuration Entertainment Mainframe Connector:

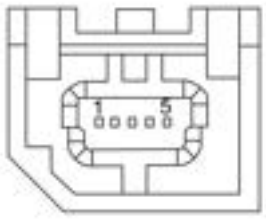

Pin No.	Description
1	USB_VBUS
2	USB_DN
3	USB_DP
4	NA
5	Ground
6	Shielded Wire

End View and Pin Information of High Configuration Entertainment Mainframe Harness Connector

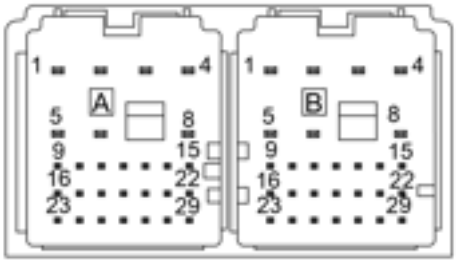

Pin No.	Description	Pin No.	Description
A1	Left Front Speaker -	B1	Right Rear Speaker +
A2	Left Front Speaker +	B2	Right Rear Speaker -
A3	Right Front Speaker +	B3	Left Rear Speaker +
A4	Right Front Speaker -	B4	Left Rear Speaker -
A5-6	Ground	B5	Power Supply
A8-13	-	B6-B8	-
A14	Rear Camera CVBS +	B9	Camera GND
A15	Rear Camera CVBS - Ground	B10	Camera Power Supply
A16	Bluetooth Phone/ Speech Recognition	B11-B13	
A17	Bluetooth Phone/ Speech Recognition	B14	High Speed CAN Communication
A18-A27	-	B15	High Speed CAN Communication
A28	TBOX Audio Signal	B16-B22	
A29	TBOX Audio Shielded Wire	B23	FICM_LIN1
		B24-B29	-

End View and Pin Information of High Configuration Entertainment Mainframe

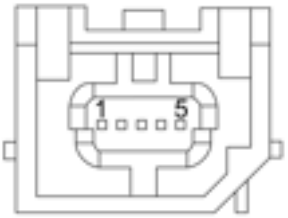

Connector:

Pin No.	Description
1	USB1 5V Power Supply
2	USB1 Data -
3	USB1 Data +
4	-
5	USB1 Ground
6	Shielded Wire

End View and Pin Information of High Configuration Entertainment Mainframe Connector:

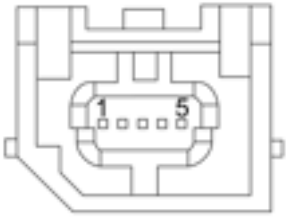

Pin No.	Description
1	USB2 5V Power Supply
2	USB2 Data-
3	USB2 Data+
4	-
5	USB2 Ground
6	Shielded Wire

End View and Pin Information of High Configuration Entertainment Mainframe Connector:

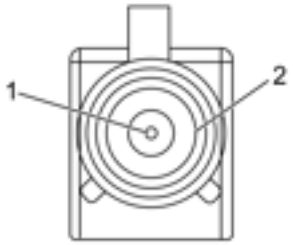

Pin No.	Description
1	DAB+
2	DAB - Shielded Wire

End View and Pin Information of High Configuration Entertainment Mainframe Connector:

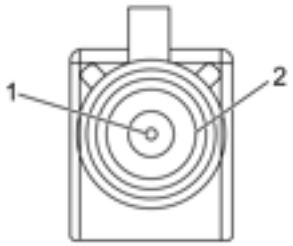

Pin No.	Description
1	AM/FM +
2	AM/FM - Shielded Wire

End View and Pin Information of High Configuration Entertainment Mainframe Connector (TBOX):

Pin No.	Description
1	USB_VBUS
2	USB_DP
3	Ground
4	USB_DN
5	Shielded Wire

Communication Module Connector

Communication Module Harness Connector and Pin Information

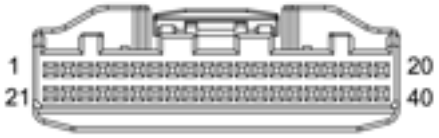

Pin No.	Description
1 - 4	-
5	Communication Module Microphone Shielded Wire
6	Front Left Microphone Signal
7	-
8	Entertainment Mainframe Audio Output Signal +
9 - 18	-
19	CAN High
20	Power Supply
21 - 24	-
25	Communication Module Microphone Output Signal
26	Front Left Microphone Shielded Wire
27	-
28	Entertainment Mainframe Audio Output Signal -
29 - 38	-
39	CAN Low
40	Ground

Communication Module Harness Connector and Pin Information

Pin No.	Description
1	USB -
2	Ground
3	USB+
4	VBUS

Service Guide

On-board Entertainment Mainframe

Remove

1. Disconnect the negative battery cable.
2. Remove the instrument panel front passenger side trim panel assembly.

☞ **Instrument Panel Front Passenger Side Trim Panel Assembly Remove**

3. Remove the entertainment mainframe mounting screw covers.

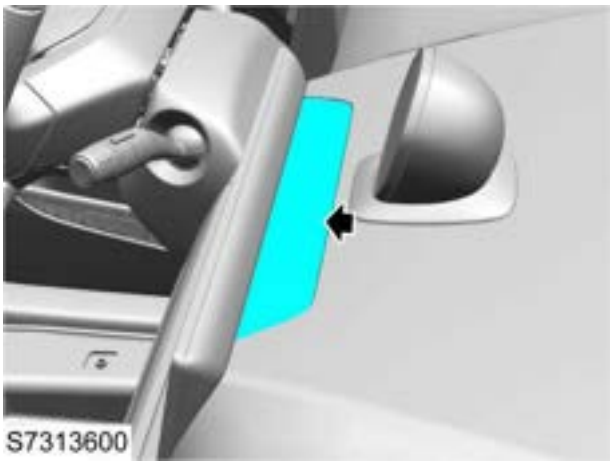

4. Remove 4 screws fixing the entertainment mainframe to the instrument panel body.

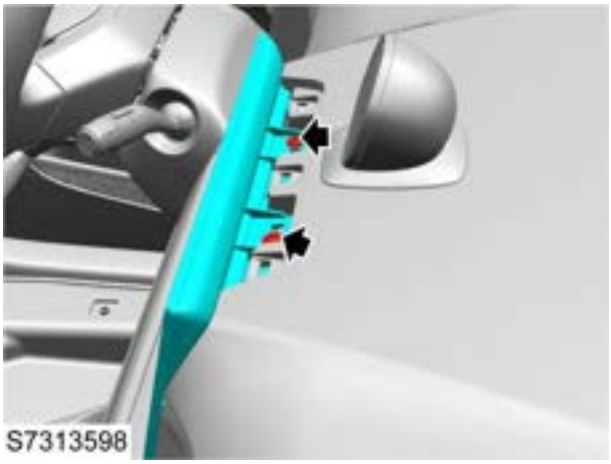

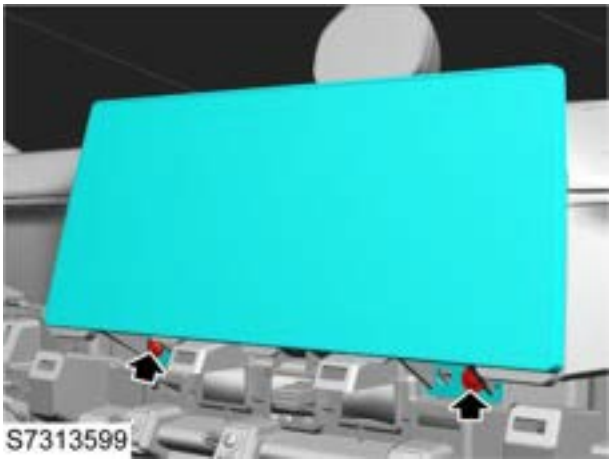

5. Disconnect the harness connector and remove the entertainment mainframe.

Refit

1. To replace the Ali entertainment mainframe (if fitted), enter the following path "Diagnosis -TAC Q&A - AVN/TBOX/All-in-One Replacement Query" in SAIC Self-Service System (SNW) and enter relevant information. Confirm the status is "Reported".
2. Connect the FICM harness connector.
3. Connect the negative battery cable.
4. Programme and encode the front infotainment control module (FICM).

☞ **Front Infotainment Control Module (FICM)**

5. After replacement of the entertainment mainframe, calibrate the 360° AVM camera (if fitted).
6. Fix the entertainment mainframe to the instrument panel body, fit 4 screws, tighten them to **1.4-1.8NM** , and check the torque.
7. Fit the entertainment mainframe mounting screw covers.
8. Fit the instrument panel front passenger side trim panel assembly.

☞ **Instrument Panel Front Passenger Side Trim Panel Assembly Refit**

Front Door Tweeter

Remove - Front

1. Disconnect the negative battery cable.
2. Remove the A pillar upper trim panel.

A Pillar Upper Trim Panel Remove

3. Disconnect the harness connector of the tweeter.
4. Loosen the retaining clips and remove the front tweeter.

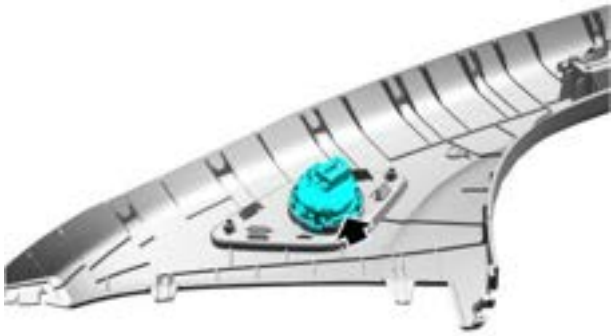

S7313591

Refit - Front

1. Clamp the front tweeter into the A pillar upper trim panel and ensure that the clips are fully engaged.
2. Connect the harness connector of the front tweeter.
3. Fit the A pillar upper trim panel.

A Pillar Upper Trim Panel Refit

4. Connect the negative battery cable.

Front Door Woofer

Remove

1. Disconnect the negative battery cable.
2. Remove the front door interior trim panel.

☞ Front Door Interior Trim Panel Remove

3. Remove 3 screws fixing the woofer to the front door, disconnect the harness connector, and remove the front door woofer.

Refit

1. Fix the woofer to the front door, fit 3 screws, tighten them to **1-2NM** , and check the torque.
2. Fit the front door interior trim panel.

☞ Front Door Interior Trim Panel Refit

3. Connect the negative battery cable.

Rear Door Woofer

Remove

1. Disconnect the negative battery cable.
2. Remove the rear door interior trim panel.

Rear Door Interior Trim Panel Remove

3. Remove 3 screws fixing the woofer to the rear door, disconnect the harness connector, and remove the rear door woofer.

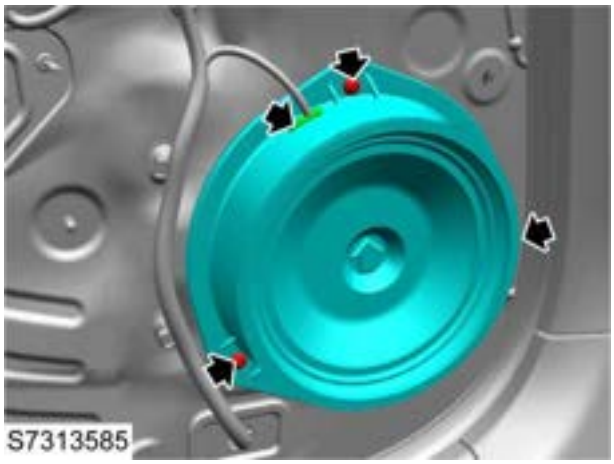

Refit

1. Fix the woofer to the rear door, fit 3 screws, tighten them to **1-2NM** , and check the torque.
2. Fit the rear door interior trim panel.

Rear Door Interior Trim Panel Refit

3. Connect the negative battery cable.

Microphone

Remove

1. Disconnect the negative battery cable.
2. Remove the microphone (models with sunroof).
   a. Remove the overhead console assembly.

☞Front Reading Lamp Remove

   b. Disconnect the harness connector.
   c. Loosen the retaining clips and remove the microphone.

3. Remove the microphone (models without sunroof).
   a. Pry off the microphone assembly.

   b. Disconnect the harness connector.
   c. Loosen the retaining clips and remove the microphone.

Refit

1. Fit the microphone (Models with sunroof).
   a. Fit the microphone into the overhead console.
   b. Connect the harness connector.
   c. Fit the overhead console.

☞Front Reading Lamp Refit

2. Fit the microphone (Models without sunroof).
   a. Fit the microphone into the microphone bracket.
   b. Connect the harness connector.
   c. Fit the microphone assembly.
3. Connect the negative battery cable.

Emergency Call Switch

Remove

1. Disconnect the negative battery cable.
2. Remove the emergency call switch (Models with sunroof).
   a. Remove the overhead console assembly.

☞ **Front Reading Lamp Remove**

   b. Loosen the clips, disconnect the harness connector, and remove the emergency call switch.

3. Remove the emergency call switch (Models without sunroof).
   a. Pry off the microphone assembly.

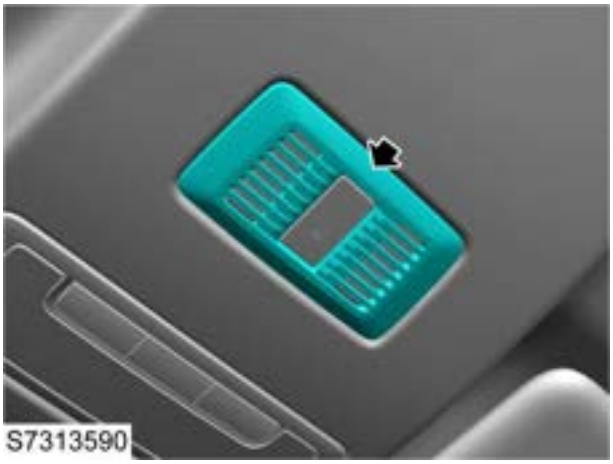

   b. Loosen the clips, disconnect the harness connector, and remove the emergency call switch.

Refit

1. Fit the emergency call switch (Models with sunroof).
   a. Clamp the emergency call switch into the overhead console.
   b. Connect the harness connector.
   c. Fit the overhead console.

☞ **Front Reading Lamp Refit**

2. Fit the emergency call switch (Models without sunroof).
   a. Clamp the emergency call switch into the microphone bracket.
   b. Connect the harness connector.
   c. Fit the emergency call switch assembly.
3. Connect the negative battery cable.

Emergency Call Speaker

Remove

1. Disconnect the negative battery cable.
2. Remove the driver side knee baffle assembly.

☞ **Driver Side Knee Baffle Assembly Remove**

3. Remove 2 screws fixing the emergency call speaker to the driver side knee baffle, and remove the emergency call speaker.

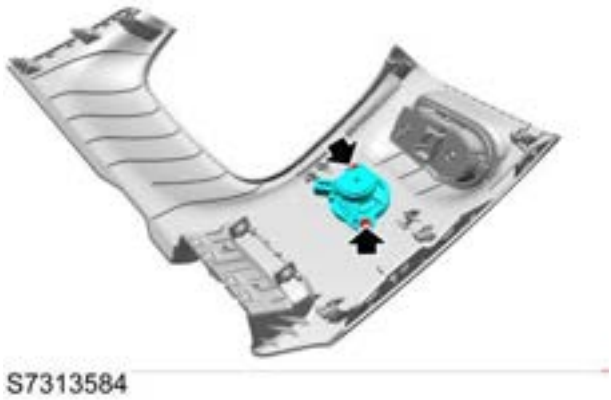

Refit

1. Fix the eCall speaker to the driver side knee baffle, fit 2 screws, tighten them to **1.4-1.8NM** , and check the torque.
2. Fit the driver side knee baffle assembly.

☞ **Driver Side Knee Baffle Assembly Refit**

3. Connect the negative battery cable.

Communication Module

Remove

1. Disconnect the negative battery cable.
2. Remove the glove box assembly.

☞ Glove Box Assembly Remove

3. Remove 2 bolts (1) fixing the communication module to the instrument panel beam.
4. Disconnect the harness connector (2) and remove the communication module.

LHD

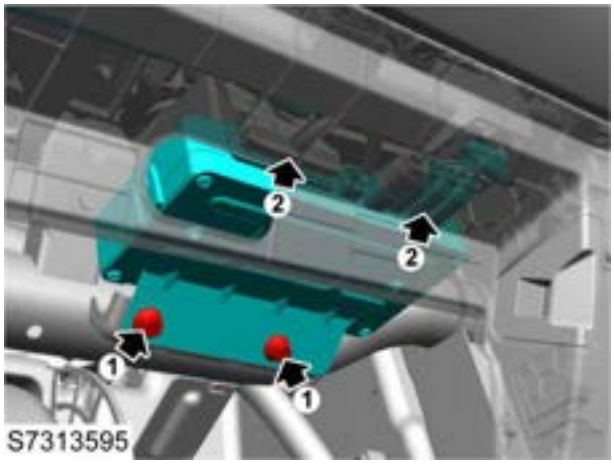

RHD

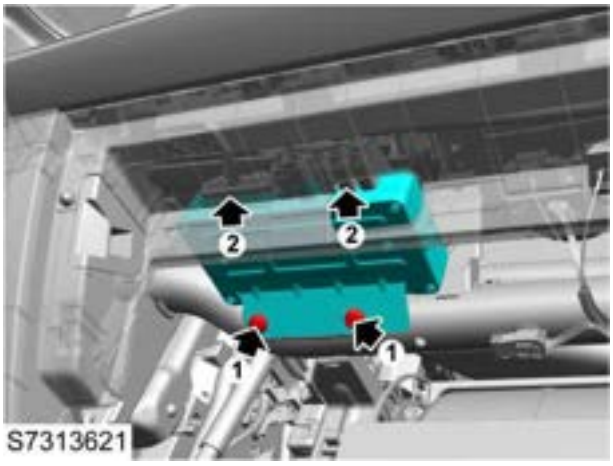

Refit

1. Connect the harness connector of the communication module.
2. Connect the negative battery cable.
3. Programme and encode the communication module (TBOX).

☞ Communication Module (TBOX)

4. Fix the communication module to the instrument panel beam, fit 2 bolts, tighten them to **7-10NM** , and check the torque.
5. Fit the glove box assembly.

☞ Glove Box Assembly Refit

Communication Antenna

Remove

1. Disconnect the negative battery cable.
2. Remove the instrument panel body assembly.

☞ **Instrument Panel Body Assembly Remove**

3. Disconnect the harness connector.
4. Remove 4 screws fixing the communication module antenna to the instrument panel, and remove the communication module antenna.

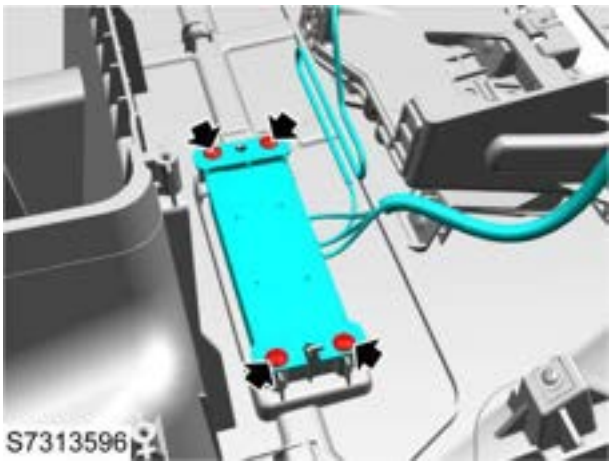

Refit

1. Fix the communication module antenna to the instrument panel, fit 4 screws, tighten them to **0.8-1.2NM** , and check the torque.
2. Connect the harness connector.
3. Fit the instrument panel body assembly.

☞ **Instrument Panel Body Assembly Refit**

4. Connect the negative battery cable.

Radio Antenna Coil

Remove

1. Disconnect the negative battery cable.
2. Remove the tailgate interior trim panel.

Tailgate Interior Trim Panel Remove

3. Remove 2 bolts (1) fixing the radio antenna coil to the tailgate, disconnect the harness connector (2) and remove the radio antenna coil.

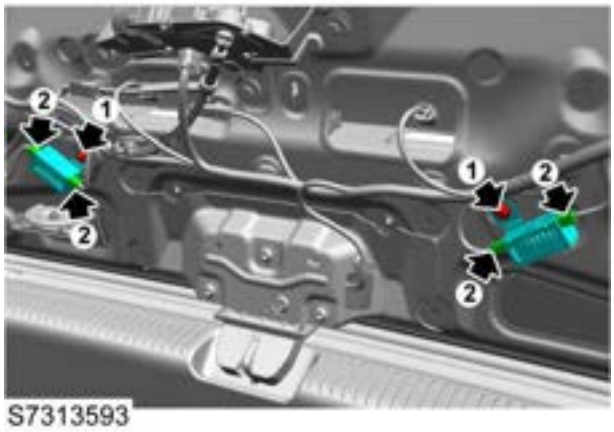

Refit

1. Connect the harness connector of the radio antenna coil.
2. Fix the radio antenna coil to the tailgate, fit 2 bolts, tighten them to **7-10NM** , and check the torque.
3. Fit the tailgate interior trim panel.

Tailgate Interior Trim Panel Refit

4. Connect the negative battery cable.

Antenna Amplifier

Remove

1. Disconnect the negative battery cable.
2. Pry off the clips along the edage of tailgate upper trim panel，disconnect the harness connector，and remove tailgate upper trim panel。

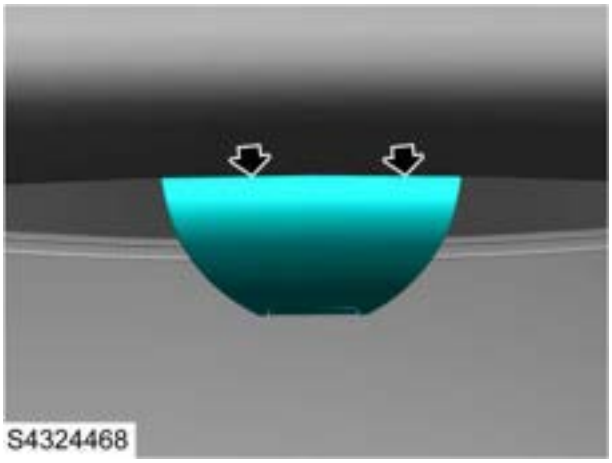

3. Remove 1 bolt fixing the antenna amplifier to the body, disconnect the harness connector, and remove the antenna amplifier.

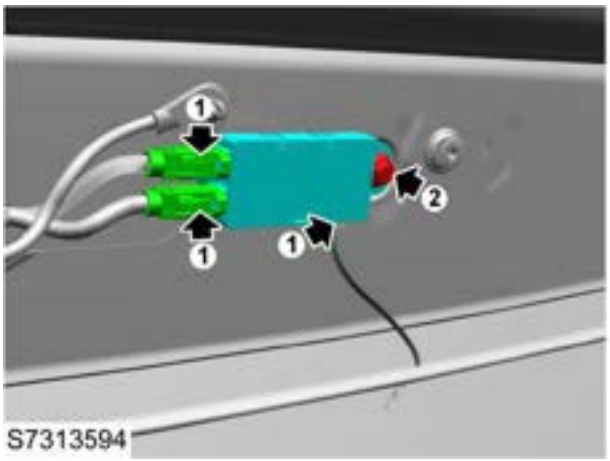

Refit

1. Fix the antenna amplifier to the body, fit 1 bolt, tighten it to **7-10NM** , and check the torque.
2. Connect the harness connector.
3. Connect the harness connector，fit tailgate upper trim panel, and fit the clips.
4. Connect the negative battery cable.

Display and Gauge

Specification

Torque

Description	Value
Nut-IPK to Instrument Panel beam	1.3-1.9NM

Description and Operation

System Layout

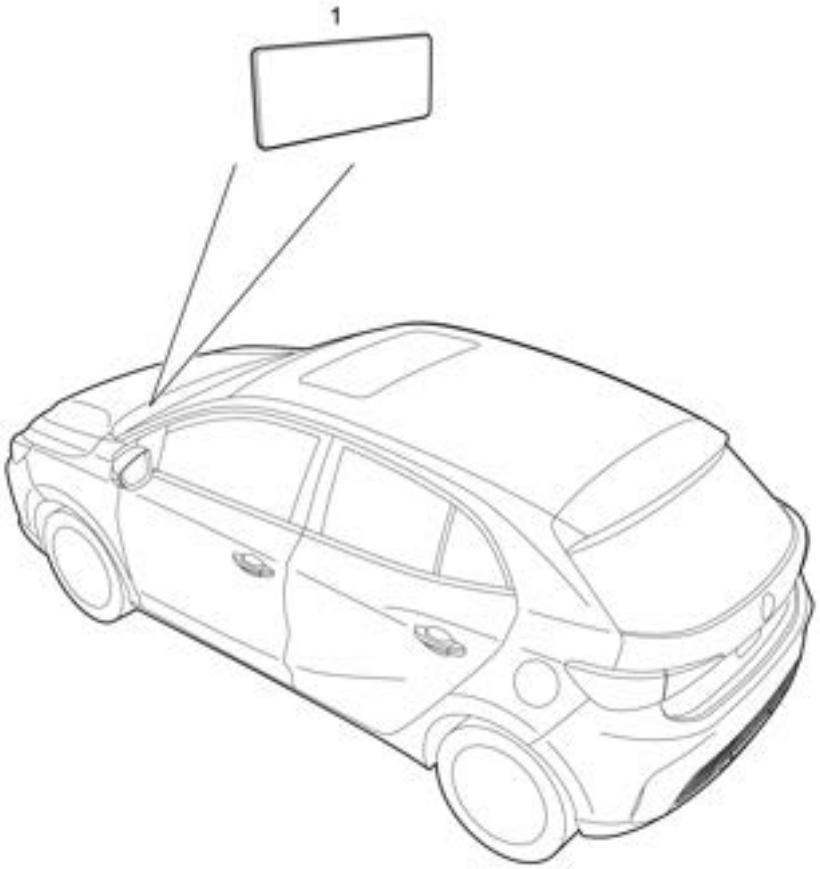

S7310098

1. Instrument Pack

System Control Diagram

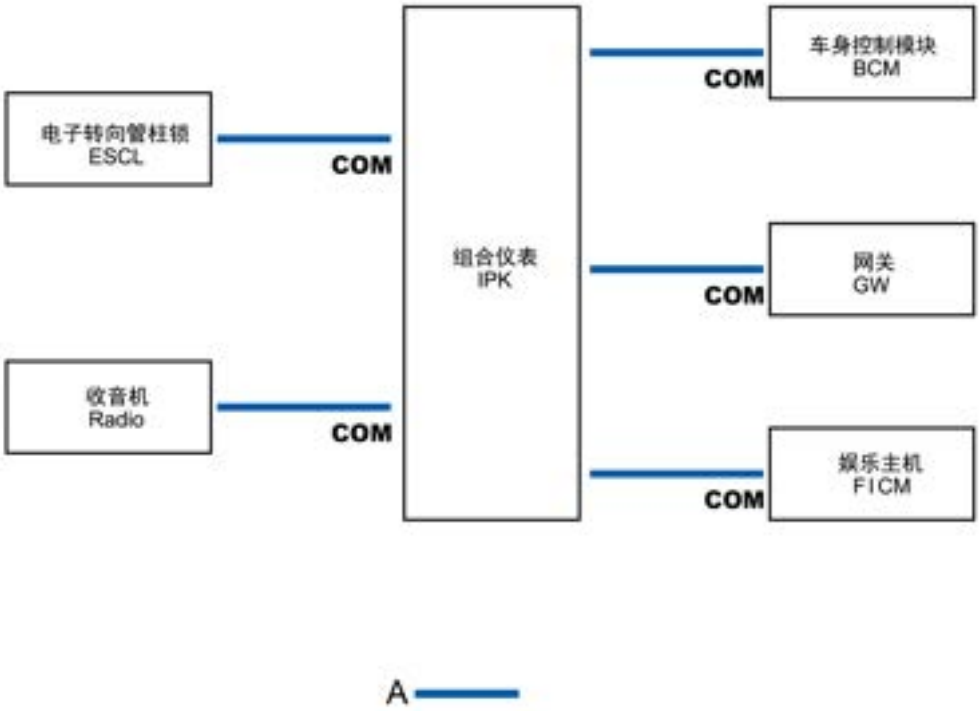

S7310101

A = Comfort CAN Bus

Description

Overview

The instrument pack is connected to the instrument harness by connectors and secured to the instrument panel assembly by 2 screws. The instrument pack is an (integral) packaged component , so it cannot be disassembled for service.

Display Information

Refer to User Manual for display information.

Operation

Operation Mode

The specific function of the instrument pack available at a given time depends on the position of the Start switch.

The instrument pack receives the status information of the Start switch via theCAN network or hard wire input signals.

Sleep Mode

When the IPK fully enters into the sleep mode, the static current is minimum.

Standby Mode

Some functions can be realized.

Activation Mode

All functions can be activated to operate. For example:CAN sending/receiving signals, warning indicator lamp, tachometer, speedometer and other functions.

Detailed Information List of Component Pins

End View and Pin Information of Connector

End View and Pin Information of IPK Harness Connector

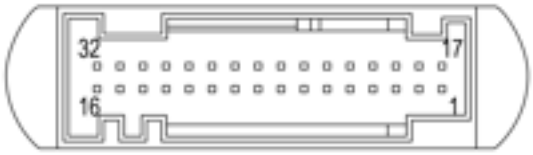

Pin No.	Description
1	Power Supply
2	Ground
3 - 4	-
5	Ignition Relay
6	-
7	Hand Brake Signal
8	-
9	Terminal Resistance +
10	Terminal Resistance -
11-21	-
22	Fuel AD Signal
23	Ground
24	Auto-hold Output +
25	-
26	HS CAN High Level
27	HS CAN Low Level
28	-
29	-
30	-
31-32	-

Service Guide

Instrument Pack

Remove

1. Disconnect the negative battery cable.
2. Remove the instrument pack frame.

Steering Column Shield Remove

3. Pry off the clips, and remove the instrument pack mounting screw covers.

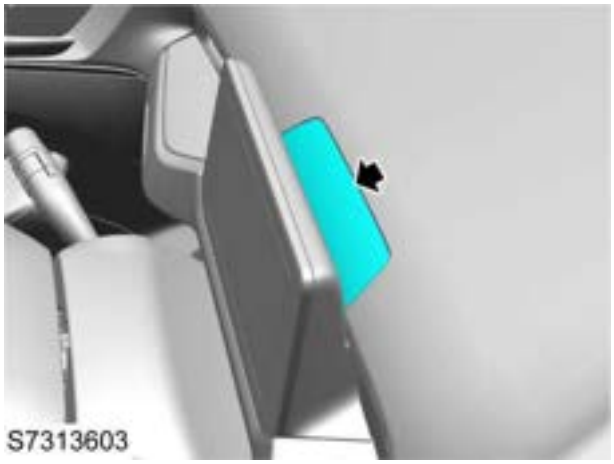

4. Remove 4 screws fixing the instrument pack to the instrument panel, disconnect the harness connector and remove the instrument pack.

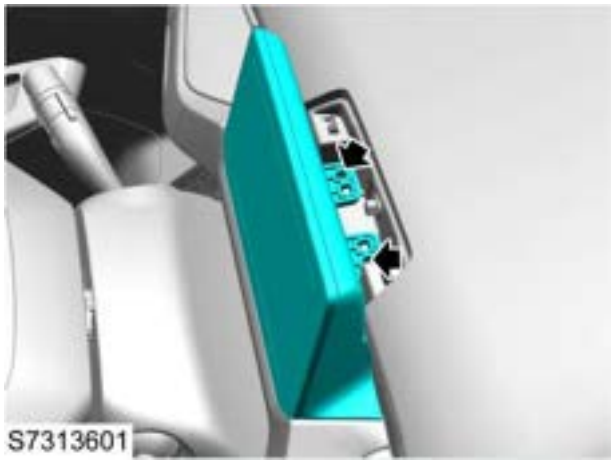

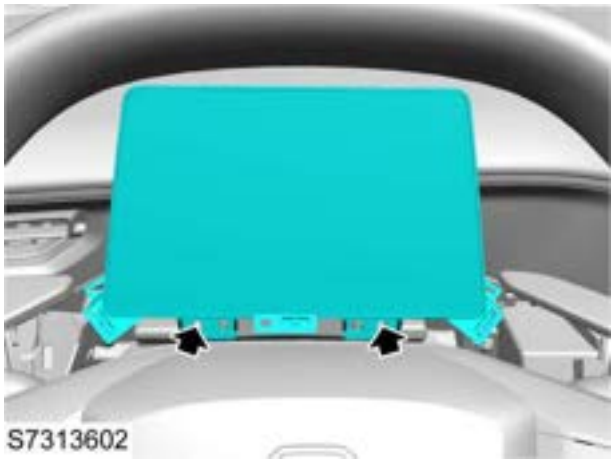

Refit

1. Connect the harness connector.
2. Connect the negative battery cable.
3. Programme and encode the instrument pack (IPK).

Instrument Pack (IPK)

4. Fix the instrument pack to the instrument panel, fit 4 screws, tighten them to **1.3-1.9NM** , and check the torque.
5. Fit the instrument pack mounting screw cover plates, and ensure that the clips are fully engaged.
6. Fit the instrument pack frame.

Steering Column Shield Refit

LV Fuse Box

Specification

Torque

Description	Value
Nut-The Lower Cover Front Compartment Fuse Block to Body	6.5-9.5NM

Service Guide

Front Compartment Fuse Box Lower Cover

Remove

1. Disconnect the negative battery cable.
2. Loosen the clips and remove the upper cover of the front compartment fuse box.

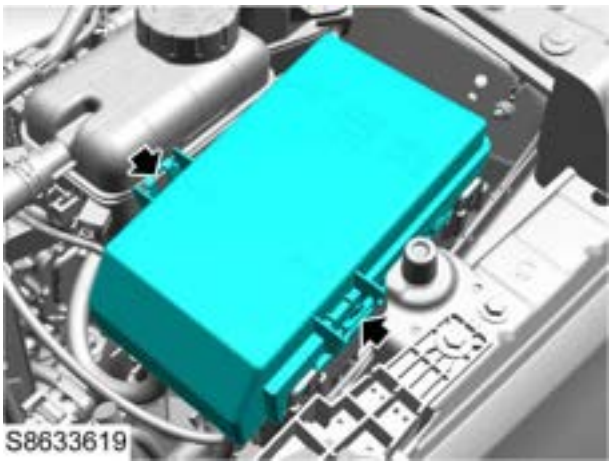

3. Disconnect the harness connector (1), and loosen the harness clips from the fuse box.
4. Remove 6 nuts (2) fixing the harness to the front compartment fuse box, and remove the harness.

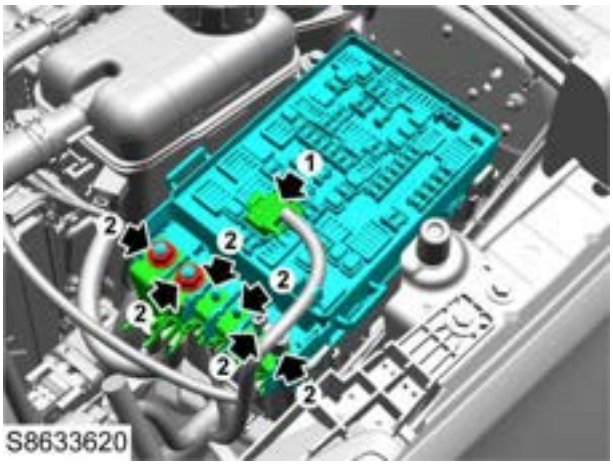

5. Remove the front compartment fuse box harness cover.
6. Loosen the clip fixing the front compartment fuse box to the lower cover, lift the front compartment fuse box, disconnect the harness connector on the back of front compartment fuse box, and remove the harness.
7. Remove 3 nuts fixing the front compartment fuse box lower cover to the body.

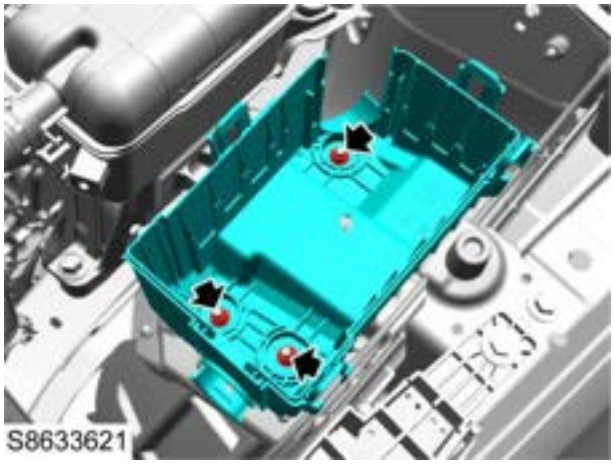

8. Remove the lower cover of the front compartment fuse box.

Refit

1. Fix the front compartment fuse box lower cover to the body, fit 3 nuts, tighten them to **6.5-9.5NM** , and check the torque.
2. Connect the harness connector on the back of the front compartment fuse box, fix the front compartment fuse box to the front compartment fuse box lower cover, and secure it with clips.
3. Fit the front compartment fuse box harness cover.
4. Fix the harness to the front compartment fuse box, fit 6 nuts and tighten them.
5. Connect the harness connector, and secure it with clips.
6. Fit the upper cover of the front compartment fuse box.
7. Connect the negative battery cable.

LV Battery and Its Management System

Specification

Torque

Description	Value
Bolt-Battery tray to battery bracket	19-25NM
Bolt-Battery Clip to Battery	19-25NM
Nut-Battery Positive Cable to Clamp	4-6NM
Nut-Electrical Battery Sensor to Clamp	4.5-7.5NM
Nut-Battery Negative Cable to Electrical Battery Sensor	7-10NM
Nut-Battery Positive Cable to Front Compartment Fusebox	11-15NM
Bolt-Battery Positive Cable to Clamp	4-6NM
Nut-Battery Negative Cable to Body	7-10NM

Description and Operation

Description

Battery

Battery Instruction

All vehicles have a 12V maintenance-free lead-acid battery on the left side of the front compartment, which is fitted on the tray and fastened by the battery pressing plate. The battery electrodes are of chuck-connected pole type.

Warning : Battery fluid (electrolyte) contains sulphuric acid. It may cause severe burns if it gets on your skin or in your eyes. Wear protective clothing and a face shield. If electrolyte gets on your skin or clothes, immediately rinse it off with water. If electrolyte gets in your eyes, immediately flush eyes with water for at least 15 minutes and seek medical help.

The battery has three main functions. Firstly, it provides power for starting the vehicle. Secondly, it is used as a voltage regulator of the electrical system. Lastly, it can provide energy in a certain amount of time for the electrical demand.

Compared with the conventional battery, the packaged battery has following advantages:

- There is no need to add water during the entire life cycle of the battery.
- It adopts the overcharge protection measures. If the voltage applied to the battery is too high, it will not receive the excess current as the conventional battery will. The conventional battery will be charged even if the voltage is too high, so that air leakage will occur, causing fluid loss.
- Compared with the conventional battery, self discharge does not tend to occur for this kind of battery. This is especially important when the battery is not used for a long time.
- For the cigar lighter and smaller electrical equipment, the electric power supplied is more reliable.

Battery Charging

When the vehicle is not started, the abnormal use of electrical equipment such as long-time operation, electric leakage and long-time parking, or malfunction in the charging system may cause the battery charging failure and low battery, or even vehicle start failure. In this condition, the battery needs to be charged.

Caution : During battery charging or jump start, the negative cable should be connected to a good body grounding point, instead of battery negative terminal.

Battery Appearance Check Before Charging:

- If the shell is broken or there is a leak, DO NOT charge the battery; replace it after finding the reason.
- If the pole is broken, DO NOT charge the battery; replace it after finding the reason.
- The bulge battery due to over discharging or over charging CAN NOT be charged. The battery should be replaced.
- Before charging, clean the poles, and rub off the rust. Smear some butter on the pole to avoid electrolytic corrosion.

Precautions:

- PLEASE wear the safety glasses.
- Maintain a ventilated environment and normal temperature when charging.
- DO NOT smoke when charging, and avoid kindling in.
- Before charging, connect the positive cable first. After charging, disconnect the negative cable first.

Battery Charging Operations:

- Connect the positive charger lead to the positive battery pole, and negative charger lead to the negative battery pole. If the battery is not removed from the vehicle, PLEASE connect the negative charger lead to a good ground point on the body.
- Ensure the battery poles are clean, and the charging circuit is well connected.
- For common vented battery, it is recommended to charge by using a constant voltage at the maximum voltage limit of 16.0 ± 0.1V and the maximum current limit of 25A. When the charging current is less than 2A, it indicates that the battery is fully charged.
- During charging, if the battery temperature rises above 40°C, the charging must be stopped until the battery temperature drops to the environment temperature.
- DO NOT charge the battery below 0°C.

For the battery with a voltage less than 11.0V, at the early stage of charging, it may appear that the battery cannot be charged. Due to badly discharging, the specific gravity of sulfuric acid in the battery is too small, the liquid is close to pure water, and the internal resistance of the battery is too high. As the battery is charged, the specific gravity of sulfuric acid in the battery rises, and the charging current can gradually return to normal.

Battery Test

The battery can be tested with common battery testers available in the after sales market, such as Midtronics series battery testers. If the equipment is not type-suited, the measured data can not be used to judge the battery's status.

Battery Replacement

Caution : When removing the battery, ensure that the alarm is disarmed and the start/stop switch is off. Always

disconnect the negative terminal first, then the positive terminal. When refitting the battery, always fit the positive terminal first, then the negative terminal.

Refer to "Battery - Remove/Refit" when replacing the battery.

When charging/discharging battery or performing jump start with external equipments, the external cable should be connected to the body ground well instead of the battery negative. Otherwise, it may result in inaccurate battery power calculation.

Battery Sensor

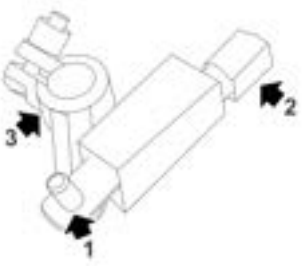

S8430074

Such model is equipped with the electronic battery sensorEBS . As shown in the figure, the electronic battery sensor is fitted on the negative battery pole with a negative battery terminal clamp (3), and connected with the negative battery cable by a bolt (1). The power ofEBS is supplied by KL30 (normally on), and it is connected with theLIN bus through the connector (2).

The electronic battery sensor is an electronic sensor, which is used to monitor the voltage, current and temperature information of the battery, and send these internal data and information to the gateway through theLIN bus, so that it executes efficient and reliable power management when the battery is always in a good charge and service life condition.

When the battery sensor is replaced, while the battery is not, the output signal accuracy of theEBS can not be guaranteed at the initial stage; after 4 hours' standstill and several starts, the output signal accuracy of theEBS can be guaranteed. Power failure ofEBS does not affect the battery memory.

Caution：In order to avoid reducing the precision and service life of the battery, do not remove the EBS from the negative battery cable, except for replacing the battery. When removing or fitting the EBS, be careful to ensure that it does not get damaged.

Caution：After the EBS has been refitted on the battery, it takes at least 4 hours for EBS to obtain the exact status information of the battery.

Caution：For electrical related fault maintenance and power-off operation, it only needs to disconnect the negative cable from the EBS, instead of directly disconnecting the negative terminal. So it can take less time for EBS to obtain the exact status information of the battery.

Detailed Information List of Component Pins

Battery Sensor

End View of Electronic Battery Sensor Harness Connector FC025

Pin No.	Description
1	LIN
2	Battery Power

Detailed Information List of Connector Pins

Service Guide

Battery Tray

Remove

1. Remove the battery.

☞ **Battery Remove**

2. Loosen the harness clips from the battery tray.
3. Remove 1 bolt (1) fixing the air filter to the battery tray, and remove the air filter.
4. Remove 1 bolt (2) fixing the ECM bracket to the battery tray.
5. Remove 4 bolts (3) fixing the battery tray to the battery tray bracket and transmission mount.

6. Remove the battery tray.

Refit

1. Fix the battery tray to the battery tray bracket and the transmission mount, fit 4 bolts, tighten them to **19-25NM** , and check the torque.
2. Fix the ECM bracket to the battery tray, fit and tighten 1 bolt.
3. Fix the air filter to the battery tray, fit and tighten 1 bolt.
4. Fit the harness clip to the battery tray.
5. Fit the battery.

☞ **Battery Refit**

Battery Tray Bracket
Remove
Refit

Battery charging cable (PEB positive cable)

Remove

1. Disconnect the negative battery cable.
2. Without draining the coolant, remove 3 bolts fixing the transmission tank bracket to the body, and remove the tank bracket.

☞Coolant Expansion Tank Remove - ENG Remove - Transmission

3. Without draining the coolant, remove 1 bolt fixing the engine tank to the body, and remove the tank.

☞Coolant Expansion Tank Remove - ENG Remove - Transmission

4. Loosen the clips and remove the upper cover of the front compartment fuse box.

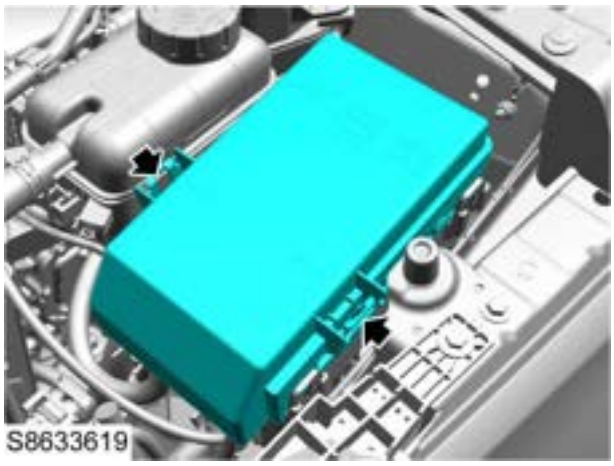

5. Remove 1 nut (1) fixing the battery charging cable to the fuse.
6. Loosen the rubber cover of the bolt, and remove 1 bolt (2) fixing the battery charging cable to the PEU.

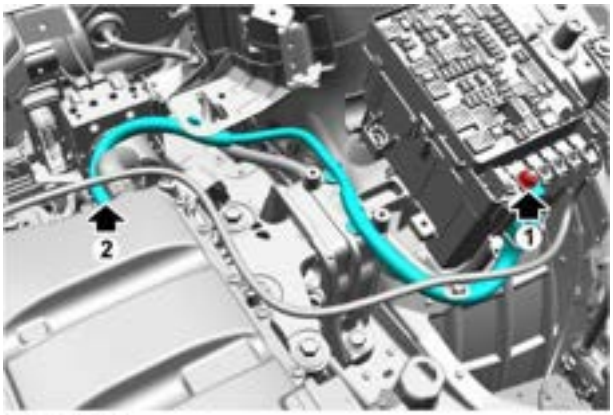

7. Loosen the harness clip and remove the battery charging cable.

Refit

1. Locate the battery charging cable to the front compartment, and tighten harness clips.
2. Fit and tighten 1 bolt fixing the battery charging cable to the PEU.
3. Fit and tighten 1 nut fixing the battery charging cable to the fuse box.
4. Fit the upper cover of the front compartment fuse box, and press the clip in place.
5. Fit the coolant expansion tank.

☞Coolant Expansion Tank Refit - ENG Refit - Transmission

6. Fit the coolant expansion tank bracket.

☞Coolant Expansion Tank Refit - ENG Refit - Transmission

7. Connect the negative battery cable.

Battery-HEV

Remove

1. Remove the luggage compartment carpet and disconnect the negative terminal of the battery.
2. Disconnect the battery end exhaust pipe (1).
3. Open the positive pole head cover, remove one nut (2) that fixes the battery positive cable to the pile head, and move the cable away.
4. Remove the two bolts (3) that secure the battery pressure plate to the vehicle body and remove the battery pressure plate.

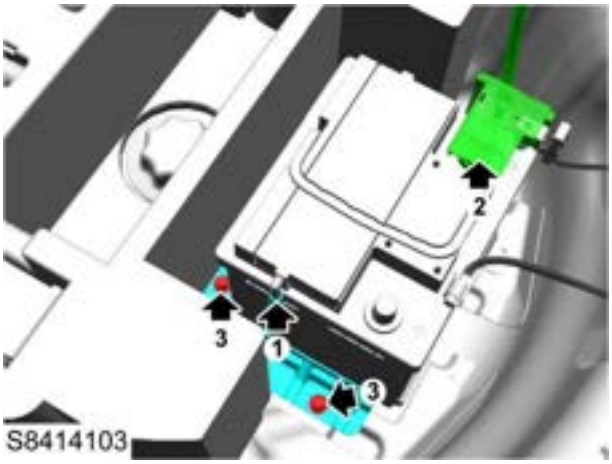

5. Remove the battery assembly.

Refit

1. Position the battery on the vehicle body.
2. Fix the battery with a pressure block, install 2 bolts, and tighten them to **19-25NM** , and check the torque.
3. Fix the positive cable of the battery to the positive pole head, install one nut, and tighten it to **4-6NM** ,check the torque and install the positive pole pile head cover.
4. Connect the battery end exhaust pipe.
5. Connect the negative terminal of the battery.
6. Perform a "battery ID write" operation on the battery sensor.

☞ **Electronic Battery Sensor (EBS)**

7. Install the luggage compartment carpet.

Battery exhaust pipe

Remove

1. Remove the luggage compartment carpet.
2. Loosen the fasteners of the tool box and remove the onboard tool box.

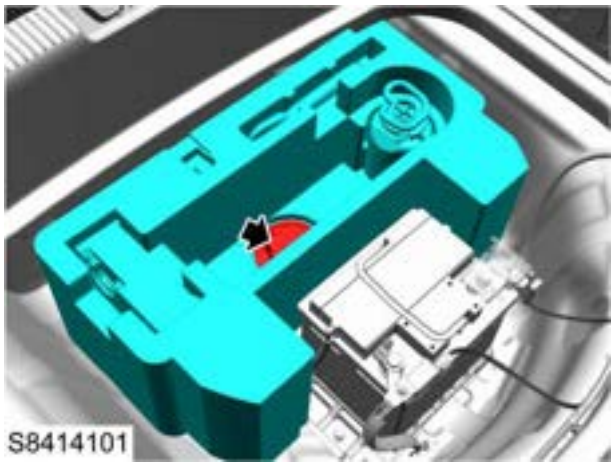

3. Disconnect the negative terminal of the battery.
4. Disconnect the connection end (1) between the battery exhaust pipe and the battery.
5. Disconnect the connection end (2) between the battery exhaust pipe and the vehicle floor, release the clip, and remove the battery exhaust pipe.

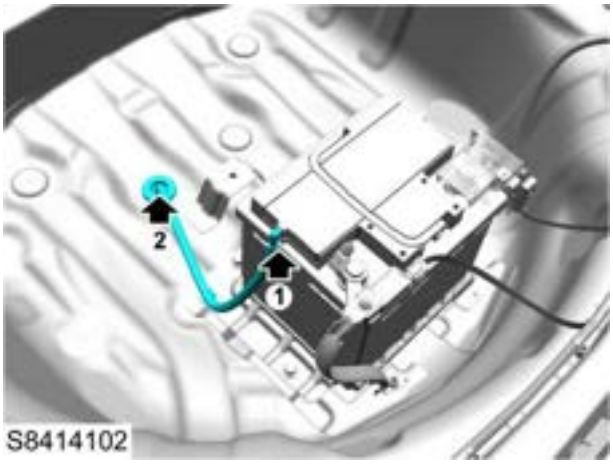

Refit

1. Position the battery exhaust pipe to the vehicle body and press the clip to secure it.
2. Connect the battery exhaust pipe to the end of the vehicle floor.
3. Connect the battery exhaust pipe to the battery end.
4. Connect the negative terminal of the battery.
5. Install the onboard tool box and tighten the fasteners.
6. Install the luggage compartment carpet.

Battery current sensor-HEV

Remove

Caution：Use a locking tool to prevent damage to the EBS.

1. Remove the luggage compartment carpet.
2. Use an open-ended wrench (1) to hold the negative pole head of the battery and secure the battery sensor .
3. Disconnect the battery sensor harness connector (2).
4. Remove one nut (3) that secures the negative battery cable to the battery sensor and move the cable away.
5. Loosen the negative clamp nut (4) on the battery sensor and remove the battery sensor.

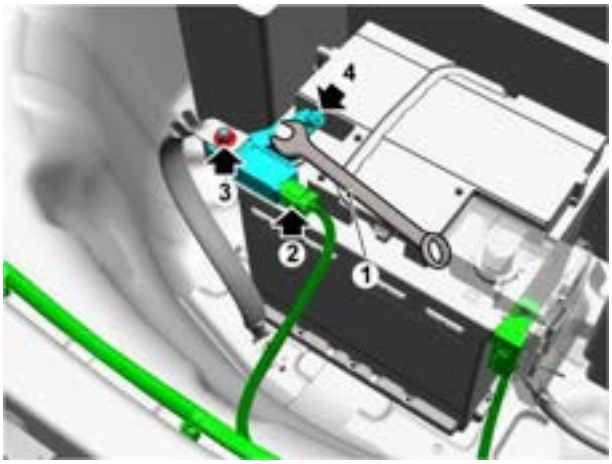

Refit

Caution：Use a locking tool to prevent damage to the EBS.

1. Clamp the negative terminal of the battery sensor onto the pile head, place it on the negative terminal of the battery, rotate to the bottom and adjust it.
2. Tighten the negative pole pile head nut to **4.5-7.5NM** .
3. Insert the negative battery cable into the battery sensor Connect the end post, use an open-ended wrench to hold the negative pole head of the battery, install a nut, and tighten it to **7-10NM** ,and check the torque.
4. Connect the battery sensor connector.
5. Perform a "battery ID write" operation on the battery sensor.

☞ Electronic Battery Sensor (EBS)

6. Install the luggage compartment carpet.

Battery positive cable - HEV

Remove

1. Remove the luggage compartment carpet and disconnect the negative terminal of the battery.
2. Open the positive pole cover, remove one nut (1) that secures the vehicle harness to the battery positive cable, and move the harness away.
3. Loosen one nut (2) that secures the positive battery cable to the pile head and move the cable away.

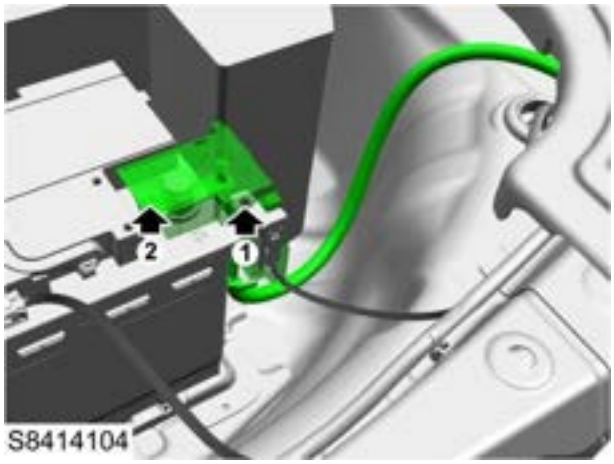

4. Remove the left luggage compartment side trim panel.

☞ **Luggage compartment side trim panel Remove**

5. Remove the left door sill trim.

☞ **Door sill trim panel Remove**

6. Remove the left seat assembly.

☞ **Front seats Remove**

7. Remove the left A-pillar lower trim panel.

☞ **A-pillar lower trim panel Remove**

8. Remove the body control module.

☞ **BCM Remove**

9. Remove the coolant expansion tank without excluding the coolant.

☞ **Coolant expansion tank**

☞ **Coolant expansion tank**

10. Remove the upper cover of the front compartment fuse box.
11. Remove one nut that secures the positive battery cable to the front compartment fuse box and move the cable away.

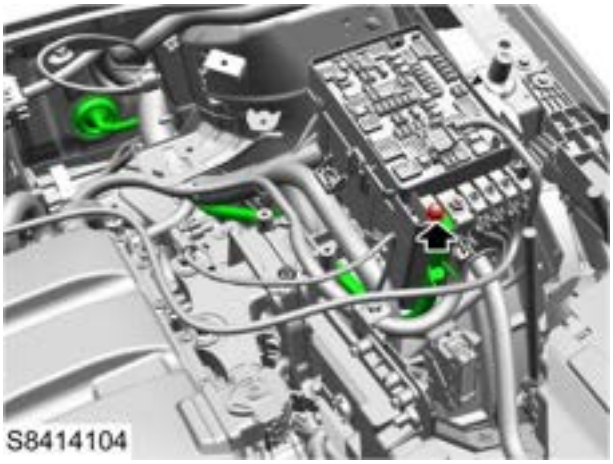

12. Release the grounding point of the wiring harness on the side of the left front door, and lift off the left carpet and some front wall insulation pads.
13. Release the wire harness clip, detach the sealing ring, and remove the positive battery cable.

Refit

1. Arrange the positive battery cable onto the vehicle body, tighten the sealing ring, and tighten the wire harness buckle.
2. Restore the front insulation pad and carpet, and tighten the grounding point of the left front door harness.
3. Fix the positive battery cable to the front compartment fuse box, install one nut, and tighten it to **11-15NM** ,and check the torque.
4. Install the upper cover of the front compartment fuse box.
5. Install the coolant expansion tank.

☞ **oolant expansion tank.**

☞ **Coolant expansion tank**

6. Install the body control module.

☞ **BCM Refit**

7. Install the left A-pillar lower trim panel.

☞ **A-pillar lower trim panel Refit**

8. Install the left seat assembly.

☞ **Front seat assembly Refit**

9. Install the left seat assembly.

☞ **Door sill trim panel Refit**

10. Install the left luggage compartment side trim panel.

☞ **Luggage compartment side trim panel Refit**

11. Fix the positive cable of the battery to the pile head and tighten the nut to **4-6NM** ,and check the torque.
12. Fix the vehicle harness to the positive battery cable, install one nut and tighten it, and install the positive pole head cover.
13. Connect the negative terminal of the battery and install the luggage compartment carpet.

Battery negative cable - HEV

Remove

Caution：Use a locking tool to prevent damage to the EBS.

1. Remove the luggage compartment carpet.
2. Use an open-ended wrench (1) to hold the negative pole head of the battery and secure .Remove one nut (2) that secures the negative battery cable to the battery sensor.
3. Remove one nut (3) that secures the negative battery cable to the vehicle body and remove the negative battery cable.

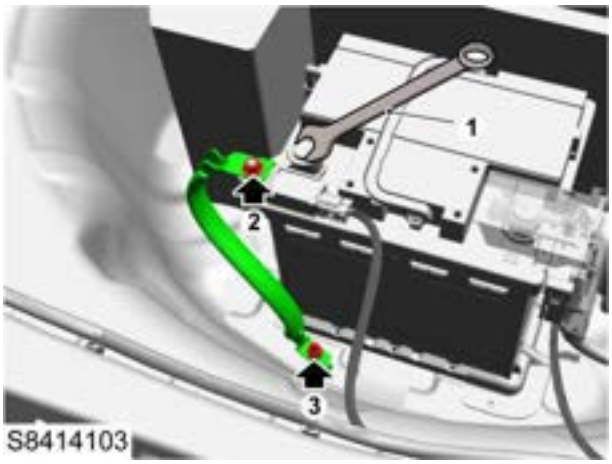

Refit

Caution：Use a locking tool to prevent damage to the EBS.

1. Fix the negative battery cable to the vehicle body, install one nut, and tighten it to **7-10NM** , and check the torque.
2. Use an open-ended wrench to hold the negative pole head of the battery and secure . Install the nut that secures the negative battery cable to the battery sensor and tighten it to **7-10NM** , and check the torque.
3. Install the luggage compartment carpet.

LV Harness

Service Guide

Front Compartment Harness

Remove

1. Disconnect the negative battery cable.
2. Remove the manual service disconnect.

Manual Service Disconnect (MSD) Remove

3. Remove the front bumper assembly.

Front Bumper Assembly Remove

4. Remove the wind scooper.

Wind Scooper Remove

5. Remove the lower cover of the front compartment fuse box.

Front Compartment Fuse Box Lower Cover Remove

6. Remove the radiator expansion tank.

Radiator Expansion Tank Remove - ENG Remove - Transmission

7. Remove the A/C air inlet grille panel and accessories.

A/C Air Inlet Grille Panel and Accessories Remove

8. Remove the air filter assembly.

Air Filter Assembly

9. Disconnect the harness connector (1) of the tweeter/woofer.
10. Disconnect the harness connector (2) of the ambient temperature sensor.

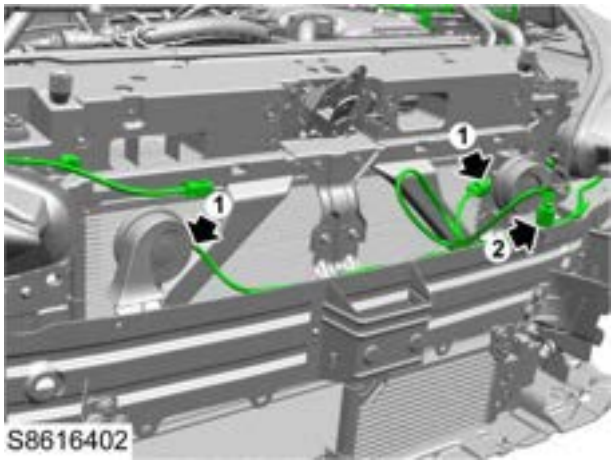

11. Disconnect the harness connector of the pedestrian alert speaker.

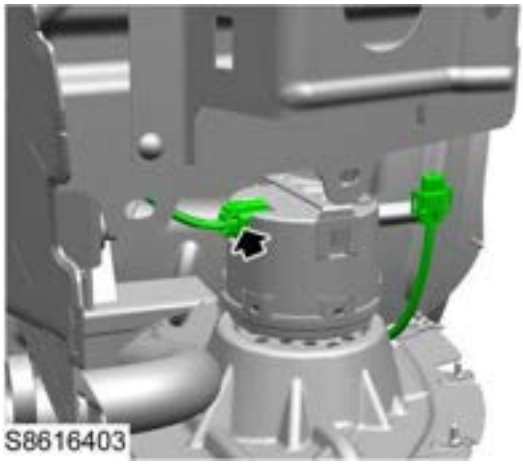

12. Disconnect the harness connector (1) of the fan relay box.
13. Loosen the ground terminal (2) from the left front longitudinal beam.

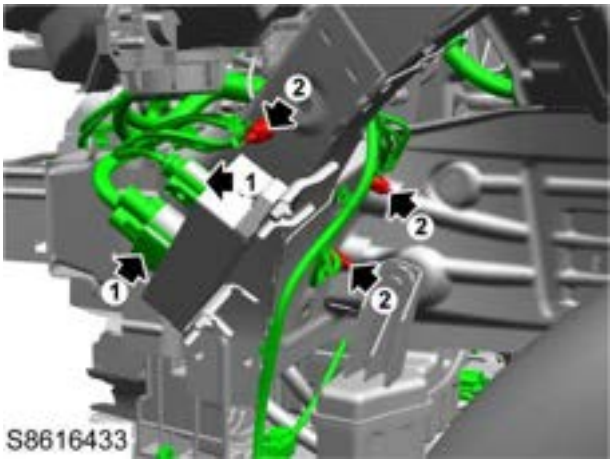

14. Disconnect the harness connector of the left headlamp.

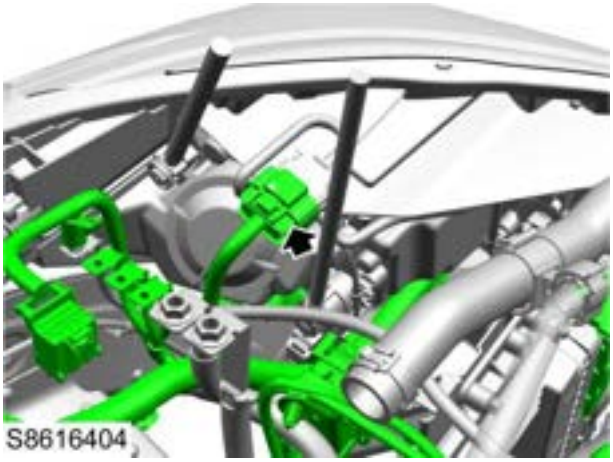

15. Disconnect the harness connector (1) of the water temperature sensor.
16. Disconnect the harness connector (2) of the transmission control module memory.
17. Disconnect the harness connector (3) of the front left impact sensor.
18. Disconnect the low voltage harness connector (4) of the power electronic box (PEB).

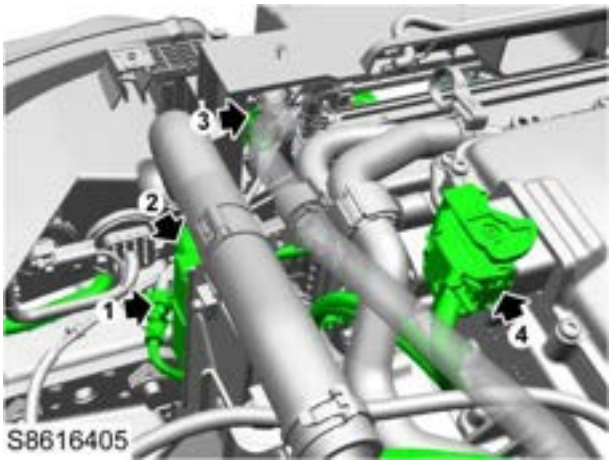

19. Disconnect the harness connector (2) of the cooling fan motor.

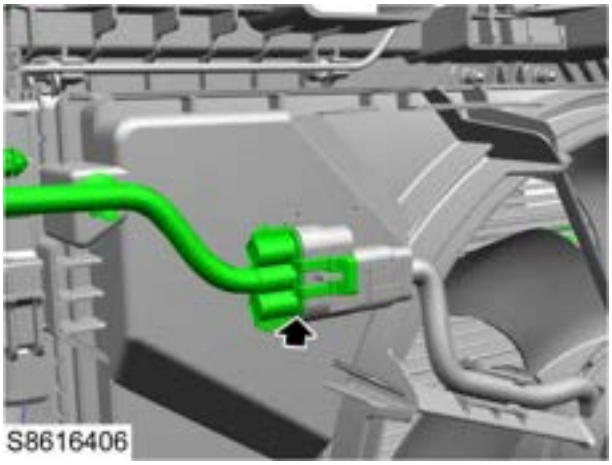

20. Loosen the ground terminal behind the front compartment fuse box.
21. Disconnect the harness connector of the front wiper motor.

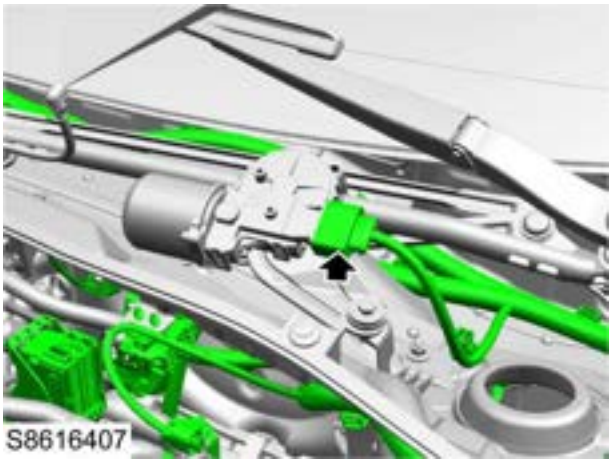

22. Loosen the ground terminal from the top of the brake modulator.
23. Disconnect the harness connector (1) of the brake fluid level sensor.
24. Disconnect the harness connector (2) of the brake modulator.
25. Disconnect the connector (3) from the front compartment harness to the engine harness.

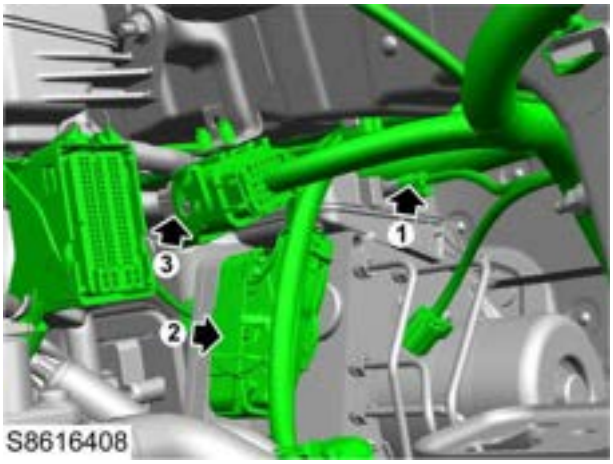

26. Disconnect the harness connector (1) of the rear oxygen sensor.
27. Disconnect the ECM memory harness connector (2).

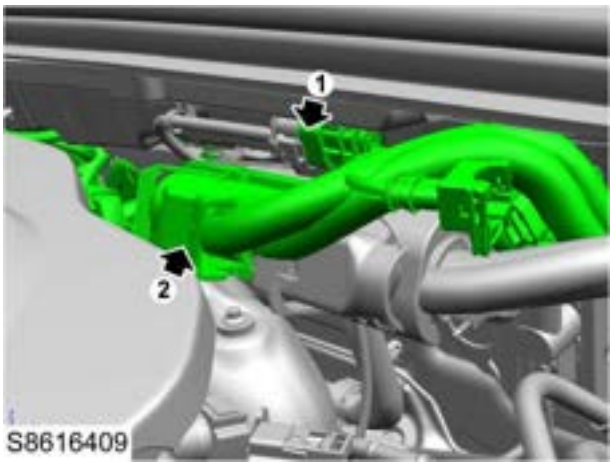

28. Disconnect the harness connector (1) of the A/C pressure sensor.
29. Loosen the ground terminal (2) fixed behind the air filter.

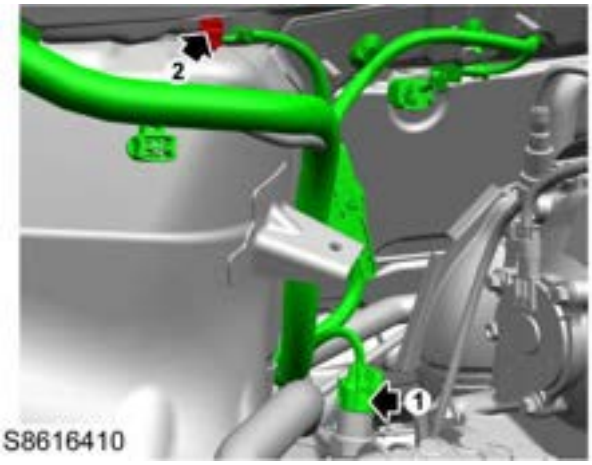

30. Loosen the ground terminal (1) on the right front longitudinal beam.
31. Disconnect the harness connector (2) of the right headlamp.
32. Disconnect the harness connector (3) of the front right impact sensor.

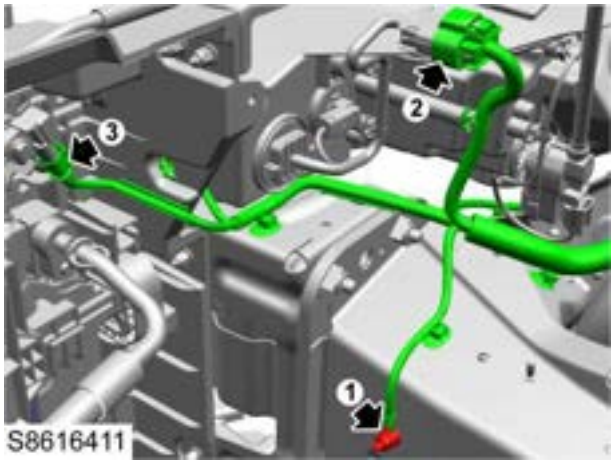

33. Loosen the ground terminal (1) from the top of the windshield washer reservoir.
34. Disconnect the harness connector (2) of the windshield washer pump.

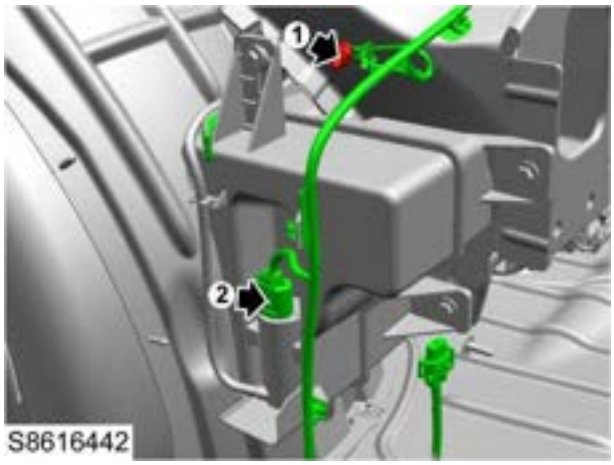

35. Remove the front wheelhouse liner assembly.

Front Wheelhouse Liner Assembly Remove

36. Remove the bottom deflector.

Bottom Deflector Remove

37. Disconnect the harness connectors of the front wheel speed sensors on both sides.

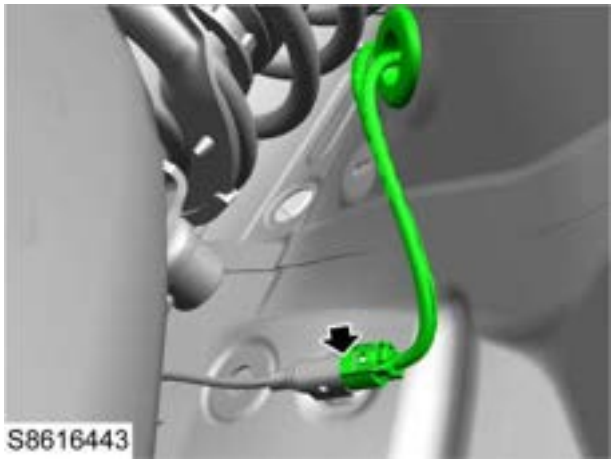

38. Disconnect the harness connector (1) of the C1 pressure sensor.
39. Disconnect the harness connector (2) of the main oil circuit pressure sensor.
40. Disconnect the harness connector (3) of the electronic fuel pump.

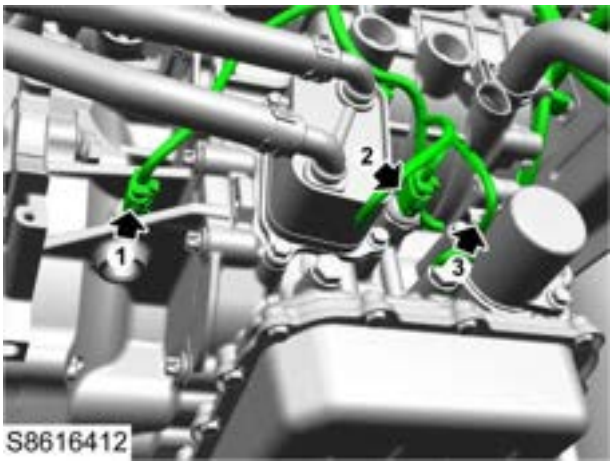

41. Disconnect the harness connector (1) of the C2 pressure sensor.
42. Disconnect the harness connector (2) of the through-cylinder connector.

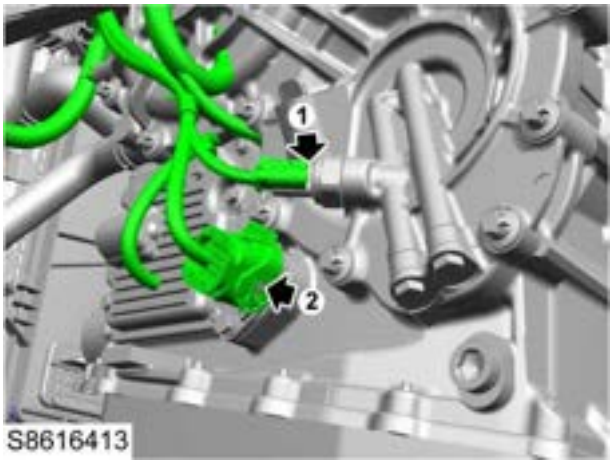

43. Lower the vehicle.
44. Remove the driver side lower trim panel assembly.

Driver Side Lower Trim Panel Assembly Remove

45. Remove the instrument panel lower closure panel.

Instrument Panel Lower Closure Panel Remove

46. Remove the A pillar lower trim panel.

A Pillar Lower Trim Panel Remove

47. Disconnect the harness connector (1) of the BCM.
48. Remove 1 nut (2) fixing the front compartment harness to the passenger side fuse box, and remove the harness.
49. Loosen the ground terminal (3) under the BCM.
50. Disconnect the front compartment harness from the body harness (drive side) (4).

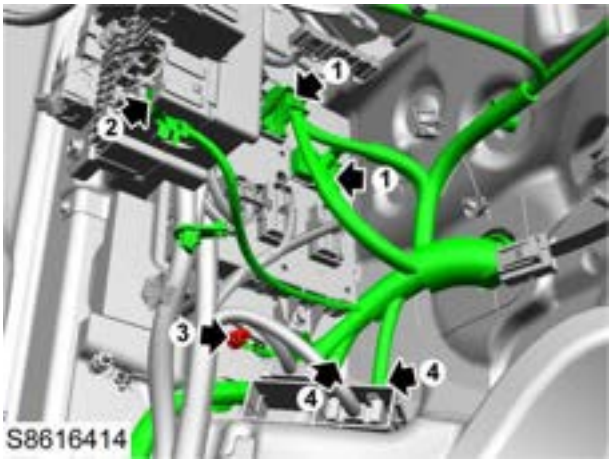

51. Disconnect the front compartment harness from the instrument panel harness (driver side).

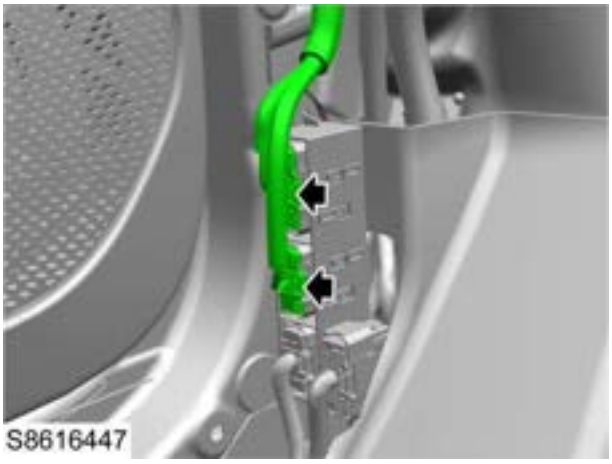

52. Disconnect the harness connector of the electronic steering control unit.

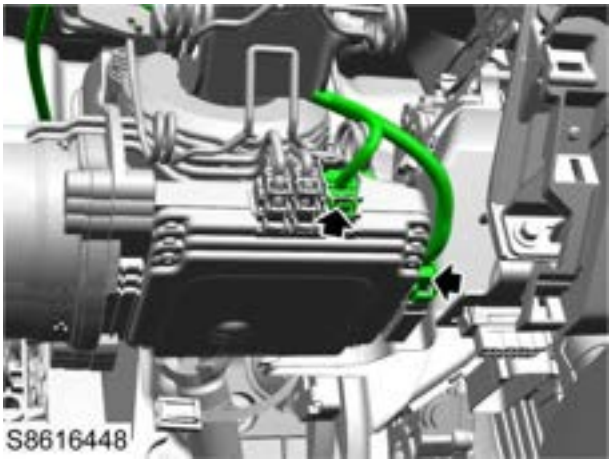

53. Disconnect the harness connector of the brake pedal position sensor.
54. Disconnect the harness connector of the accelerator pedal position sensor.

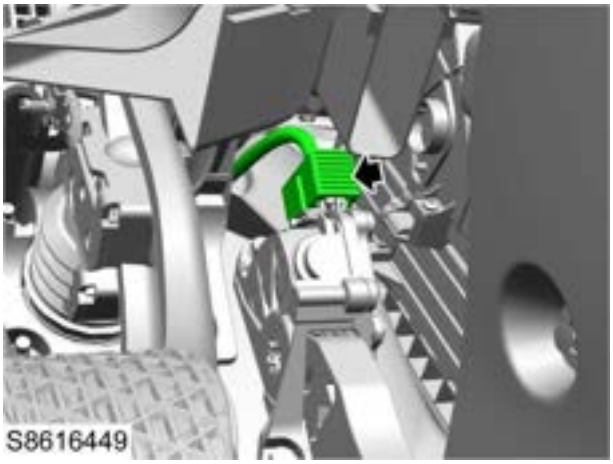

55. Disconnect the front compartment harness from the body harness (passenger side) (1).
56. Disconnect the front compartment harness from the instrument panel harness (passenger side) (2).

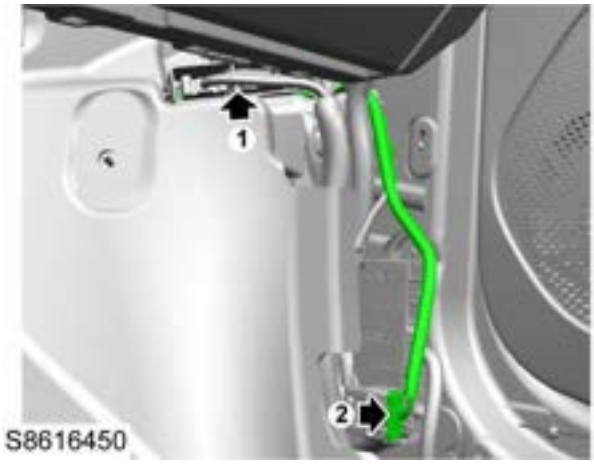

57. Disengage the seal ring, loosen the harness clips and remove the front compartment harness.

Refit

1. Arrange the harness inside the front compartment, clamp the seal ring and secure it with clips.
2. Connect the front compartment harness to the instrument panel harness (passenger side).
3. Connect the front compartment harness to the body harness (passenger side).
4. Connect the harness connector of the accelerator pedal position sensor.
5. Connect the harness connector of the brake pedal position sensor.
6. Connect the harness connector of the electronic steering control unit.
7. Connect the front compartment harness to the instrument panel harness (driver side).
8. Connect the front compartment harness to the body harness (driver side).
9. Tighten the ground terminal to the bottom of the BCM.

10. Fix the front compartment harness to the passenger side fuse box, fit 1 nut and tighten it.
11. Connect the harness connector of the BCM.
12. Fit the A pillar lower trim panel.

☞**A Pillar Lower Trim Panel Refit**

13. Fit the instrument panel lower closure panel.

☞**Instrument Panel Lower Closure Panel Refit**

14. Fit the driver side lower trim panel assembly.

☞**Driver Side Lower Trim Panel Assembly Refit**

15. Raise the vehicle with a lift.

Warning：Do not work on or under a vehicle supported only by a jack. Always support the vehicle on safety stands.

16. Connect the harness connector of the through-cylinder connector.
17. Connect the harness connector of the C2 pressure sensor.
18. Connect the harness connector of the electronic oil pump.
19. Connect the harness connector of the main oil circuit pressure sensor.
20. Connect the harness connector of the C1 pressure sensor.
21. Connect the harness connectors of the front wheel speed sensors on both sides.
22. Fit the bottom deflector.

☞**Bottom Deflector Refit**

23. Fit the front wheelhouse liner assembly.

☞**Front Wheelhouse Liner Assembly Refit**

24. Lower the vehicle.
25. Connect the harness connector of the windscreen washer pump.
26. Tighten the ground terminal to the top of the windscreen washer reservoir.
27. Connect the harness connector of the front right impact sensor.
28. Connect the harness connector of the right headlamp.
29. Tighten the ground terminal on the right front longitudinal beam.
30. Tighten the ground point to the rear of the brake modulator.
31. Connect the harness connector of the A/C pressure sensor.
32. Connect the ECM memory harness connector.
33. Connect the harness connector of the rear oxygen sensor.
34. Connect the front compartment harness to the engine harness.
35. Connect the harness connector of the brake modulator.
36. Connect the harness connector of the brake fluid level sensor.
37. Tighten the ground terminal to the top of the brake modulator.
38. Connect the harness connector of the front wiper motor.
39. Tighten the ground terminal behind the front compartment fuse box.
40. Connect the harness connector of the cooling fan motor.
41. Connect the low voltage harness connector of the power electronic box.
42. Connect the harness connector of the front left impact sensor.
43. Connect the harness connector of the transmission control module memory.
44. Connect the harness connector of the water temperature sensor.
45. Connect the harness connector of the left headlamp.
46. Tighten the ground terminal to the left front longitudinal beam.
47. Connect the harness connector of the fan relay box.
48. Connect the harness connector of the pedestrian alert speaker.
49. Connect the harness connector of the ambient temperature sensor.
50. Connect the harness connector of the tweeter/woofer.
51. Fit the air filter assembly.

☞**Air Filter Assembly**

52. Fit the A/C air inlet grille panel and accessories.

☞**A/C Air Inlet Grille Panel and Accessories Refit**

53. Fit the radiator expansion tank.

☞**Radiator Expansion Tank Refit - ENG Refit - Transmission**

54. Fit the lower cover of the front compartment fuse box.

☞**Front Compartment Fuse Box Lower Cover Refit**

55. Fit the wind scooper.

☞**Wind Scooper Refit**

56. Fit the front bumper assembly.

☞**Front Bumper Assembly Refit**

57. Fit the manual service disconnect.

☞**Manual Service Disconnect (MSD) Refit**

58. Connect the negative battery cable.

Instrument Panel Harness
Remove

1. Disconnect the negative battery cable.
2. Remove the instrument panel body assembly.

☞ Instrument Panel Body Assembly Remove

3. Remove the roof interior.

☞ Roof Interior Remove

4. Remove the carpet.

☞ Carpet Remove

5. Remove the tailgate interior trim panel.

☞ Tailgate Interior Trim Panel Remove

6. Disconnect the instrument panel harness from the front compartment harness (driver side) (1).
7. Disconnect the instrument panel harness from the body harness (driver side) (2).

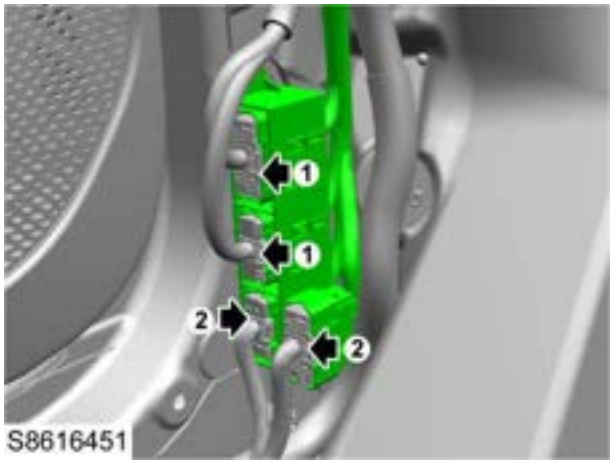

8. Remove 1 nut (1) fixing the front compartment harness to the passenger compartment fuse box, and remove the harness.
9. Remove 1 bolt (2) fixing the passenger compartment fuse box to the instrument panel beam, loosen the clips and remove the fuse box.
10. Disconnect the instrument panel harness from the body control module harness connector (3).

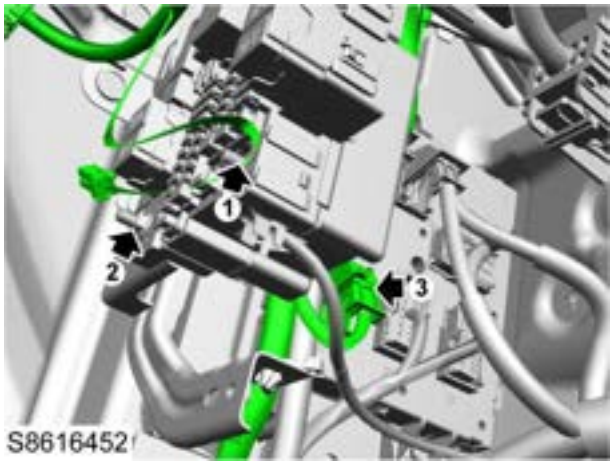

11. Disconnect the harness connector (1) of the mode damper actuator.
12. Disconnect the left footwell air outlet temperature sensor (2).

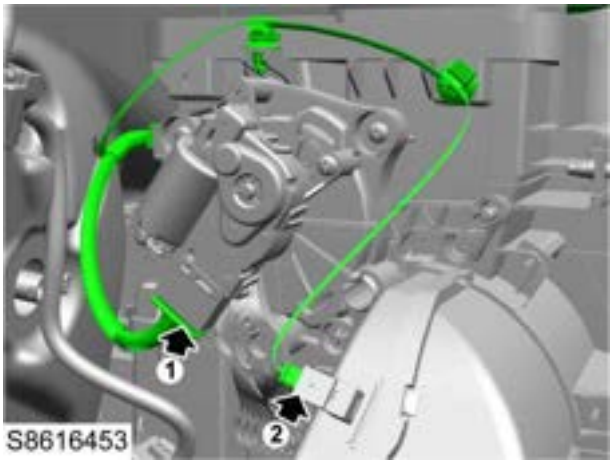

13. Disconnect the harness connector of the PEPS antenna - front.

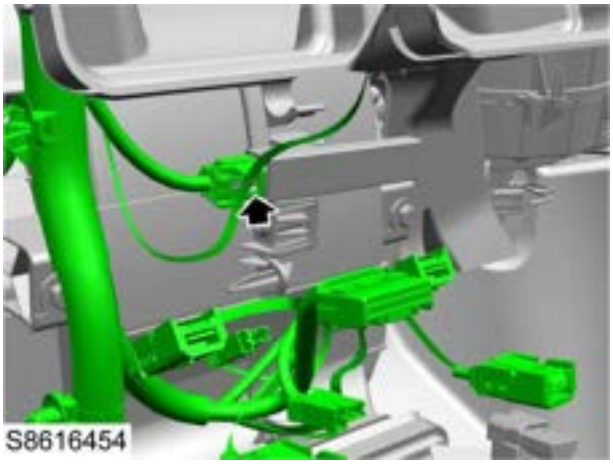

14. Loosen 2 ground terminals under the centre console.

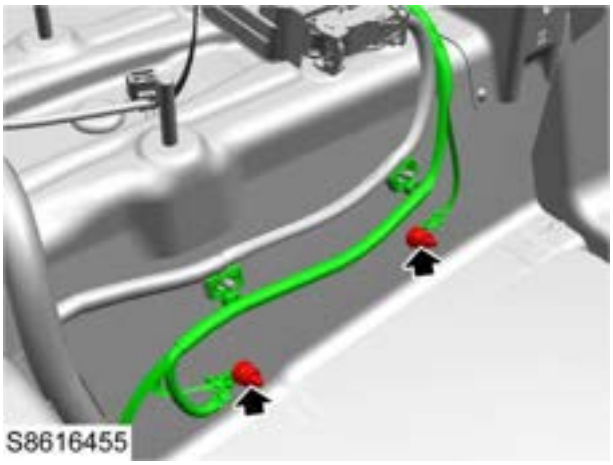

15. Disconnect the instrument panel harness from the body harness (under the front seat).
16. Disconnect the harness connector (1) of the temperature damper motor.
17. Disconnect the harness connector (2) of the blower speed regulation resistor.

18. Disconnect the harness connector (3) of the recirculation servo motor.
19. Disconnect the harness connector (4) from the blower.

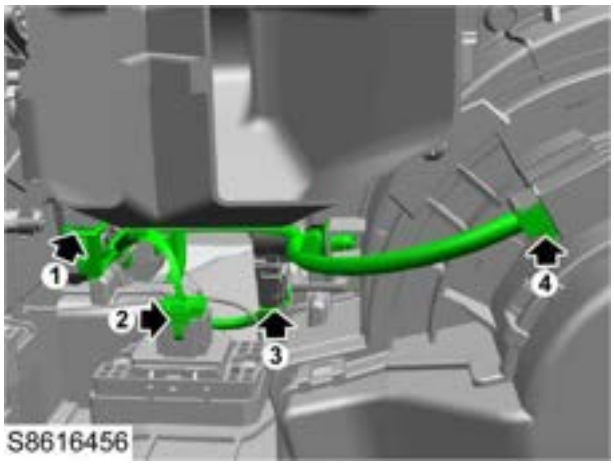

20. Disconnect the harness connector of the evaporator core temperature sensor.
21. Disconnect the harness connector of the interior temperature sensor (if equipped).
22. Disconnect the harness connector of the HVAC control module (if equipped).
23. Disconnect the harness connector (1) of the communication module.
24. Disconnect the harness connector (2) from the gateway.

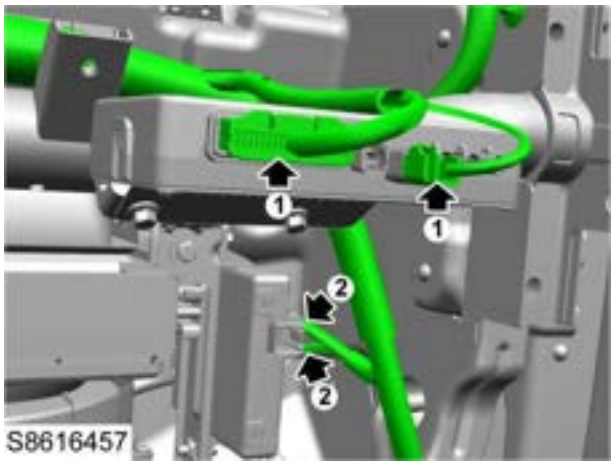

25. Disconnect the instrument panel harness from the body harness (passenger side) (1).
26. Disconnect the instrument panel harness from the front compartment harness (passenger side) (2).

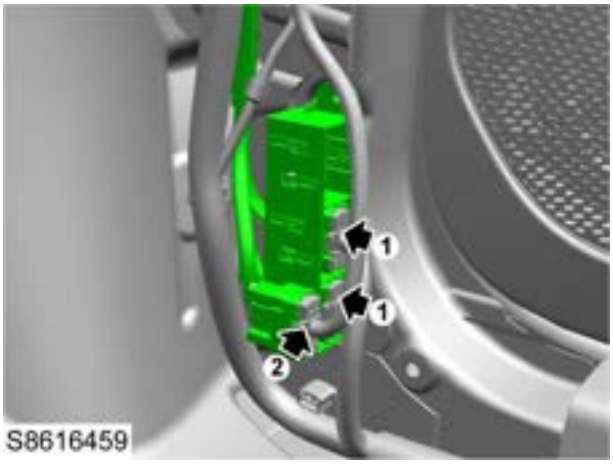

27. Disconnect the harness connector of the right roof curtain airbag.

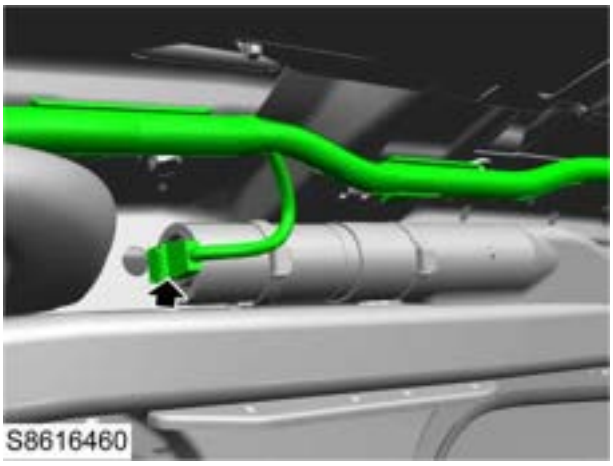

28. Disconnect the instrument panel harness from the body harness (top).

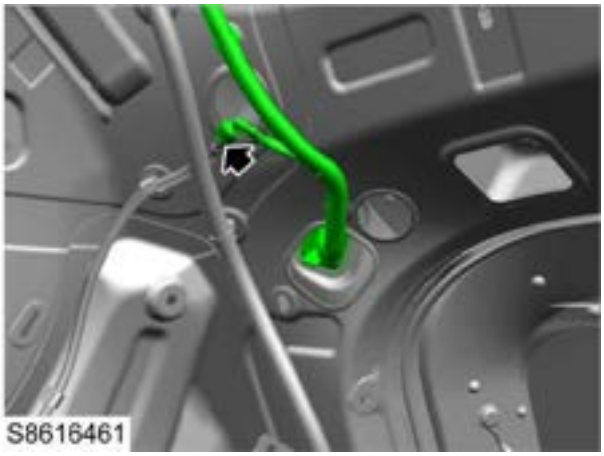

29. Disconnect the harness connector from the antenna amplifier.

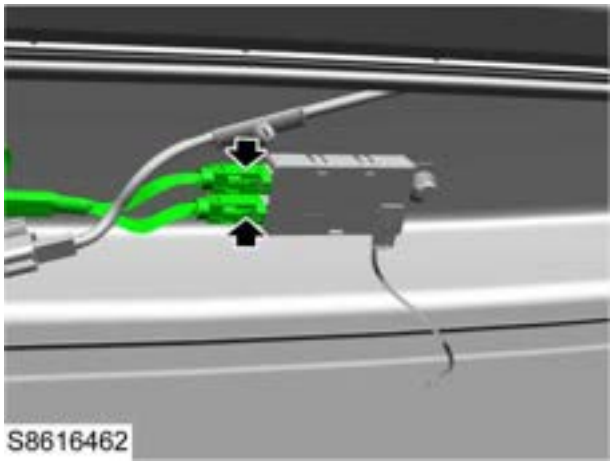

30. Disconnect the harness connector (1) of the rear view camera (360° panoramic rear view camera).
31. Disconnect the rear window washer water pipe (if equipped) (2).

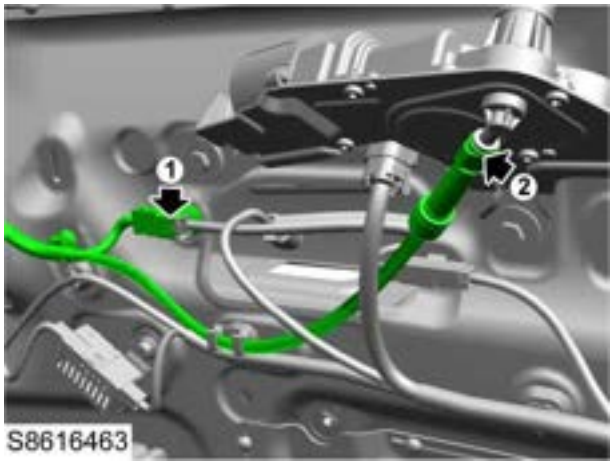

32. Disengage the seal ring, loosen the harness clips and remove the instrument panel harness.

Refit

1. Arrange the harness inside the body, clamp the seal ring and secure it with clips.
2. Connect the rear window washer water pipe (if equipped).
3. Connect the harness connector of the rear vision camera (360° panoramic rear view camera).
4. Connect the harness connector of the antenna amplifier.
5. Connect the instrument panel harness to the body harness (top).
6. Connect the harness connector of the right ceiling curtain airbag.
7. Connect the instrument panel harness to the front compartment harness (passenger side).
8. Connect the instrument panel harness to the body harness (passenger side).
9. Connect the harness connector to the gateway.
10. Connect the harness connector of the communication module.
11. Connect the harness connector of the HVAC control module (if equipped).
12. Connect the harness connector of the interior temperature sensor (if equipped).
13. Connect the harness connector of the evaporator core temperature sensor.
14. Connect the harness connector to the blower.
15. Connect the harness connector of the recirculation servo motor.
16. Connect the harness connector of the blower speed regulation resistor.
17. Connect the harness connector of the temperature damper motor.
18. Connect the instrument panel harness to the body harness (under the front seat).
19. Tighten the ground terminal under the centre console.
20. Connect the harness connector of the PEPS antenna - front.
21. Connect the harness connector of the left footwell air outlet temperature sensor.
22. Connect the harness connector of the mode damper actuator.
23. Connect the instrument panel harness to the body control module harness connector.
24. Fix the passenger compartment fuse box to the instrument panel beam, fit and tighten 1 bolt.
25. Fix the front compartment harness to the passenger compartment fuse box, fit 1 nut and tighten it.
26. Connect the instrument panel harness to the body harness (driver side).
27. Connect the instrument panel harness to the front compartment harness (driver side).
28. Fit the tailgate interior trim panel.

Tailgate Interior Trim Panel Refit

29. Fit the carpet.

Carpet Refit

30. Fit the roof interior.

Roof Interior Refit

31. Fit the instrument panel body assembly.

Instrument Panel Body Assembly Refit

32. Connect the negative battery cable.

Body Harness
Remove

1. Disconnect the negative battery cable.
2. Remove the roof interior.

☞ **Roof Interior Remove**

3. Remove the interior rearview mirror base.
4. Remove the instrument panel body assembly.

☞ **Instrument Panel Body Assembly Remove**

5. Remove the centre console assembly.

☞ **Remove the centre console assembly. Remove**

6. Remove the carpet.

☞ **Carpet Remove**

7. Remove the D pillar upper trim panel.

☞ **D Pillar Upper Trim Panel Remove**

8. Remove the D pillar lower trim panel.

☞ **D Pillar Lower Trim Panel Remove**

9. Remove the tailgate interior trim panel.

☞ **Tailgate Interior Trim Panel Remove**

10. Remove the trunk side trim panel.

☞ **Trunk Side Trim Panel Remove**

11. Disconnect the harness connector of the left roof curtain airbag.

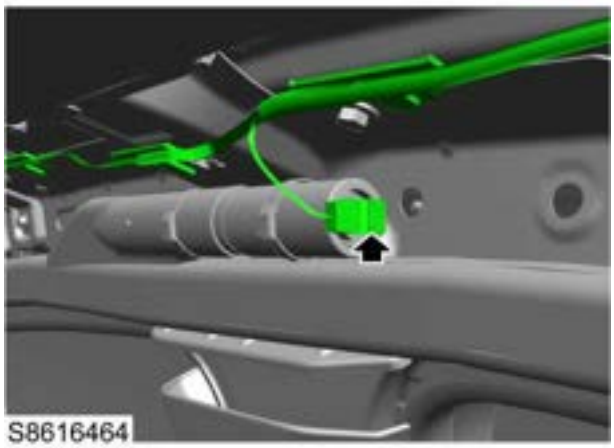

12. Disconnect the harness connector of the sunroof motor (if equipped).

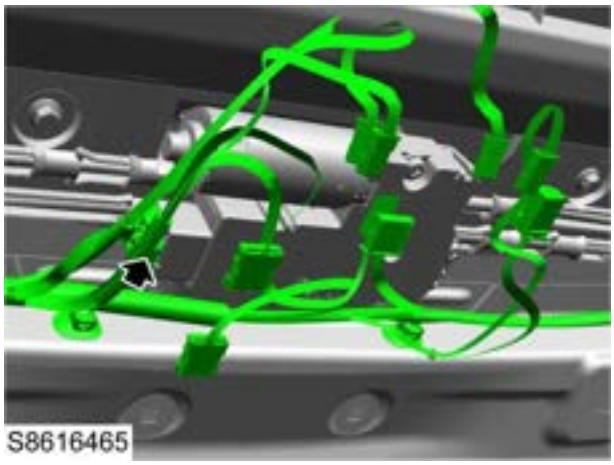

13. Disconnect the harness connector of the rain sensor (if equipped) (1).
14. Disconnect the harness connector of the front view camera module (2).
15. Disconnect the harness connector of the top USB charging module (3).

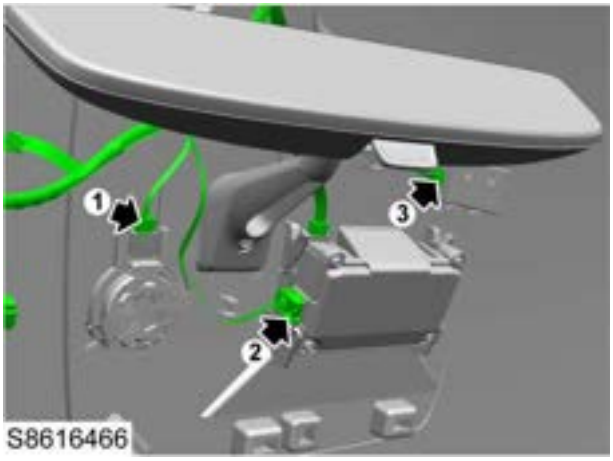

16. Disconnect the body harness from the BCM harness connector (1).
17. Pry off the rubber seal ring on the body side, and disconnect the body harness from the front left door harness (2).
18. Loosen the ground terminal (3) under the passenger side fuse box.
19. Disconnect the body harness from the front compartment harness (driver side) (4).

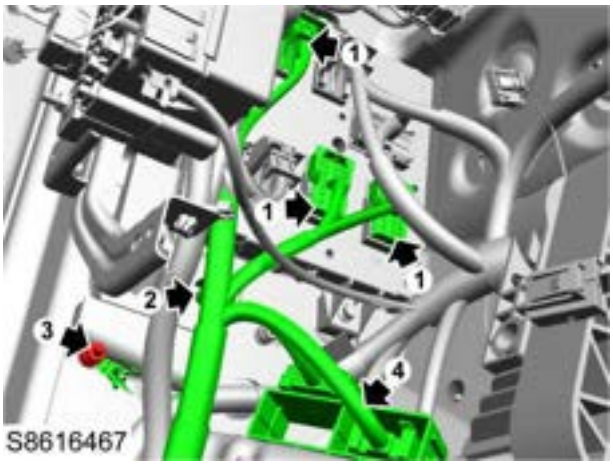

20. Disconnect the body harness from the instrument panel harness (driver side).

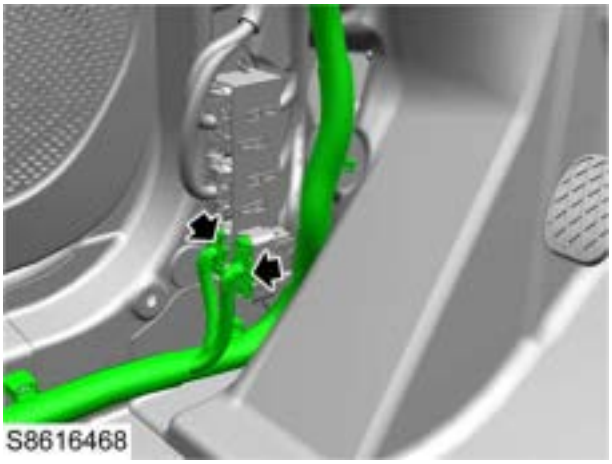

21. Loosen the ground terminal under the front left door sill trim panel.

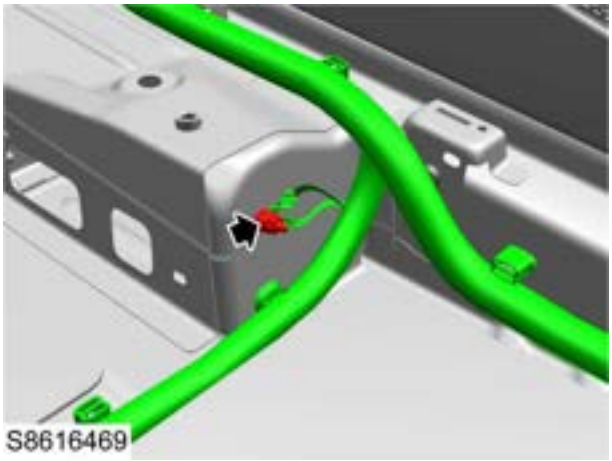

22. Disconnect the harness connector (1) of the left side impact sensor.
23. Disconnect the harness connector (2) of the front left seat belt pre-tensioner.
24. Pry off the rubber seal ring on the body side, and disconnect the body harness from the rear left door harness (3).

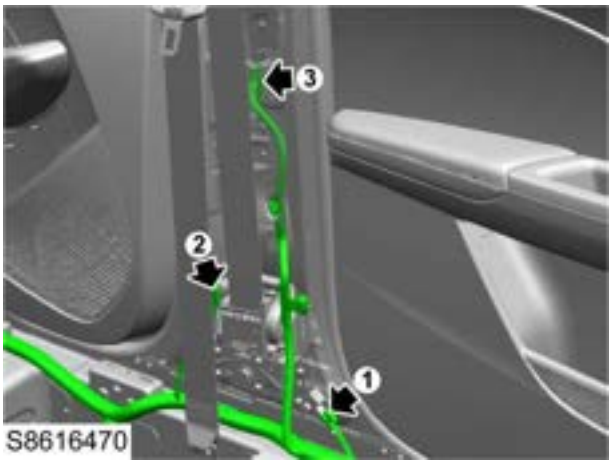

25. Disconnect the body harness from the instrument panel harness (under the front seat).
26. Disconnect the harness connector of the SDM.

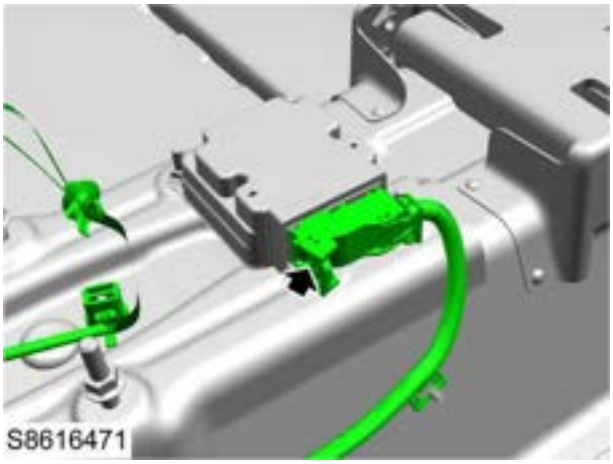

27. Disconnect the harness connector of the power unit blower.

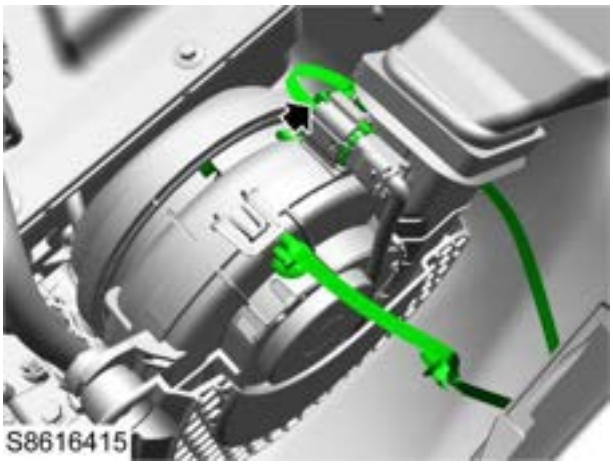

28. Disconnect the harness connectors (1) of the 2nd row seat belt buckles.
29. Disconnect the harness connector (2) of the PEPS antenna - rear.

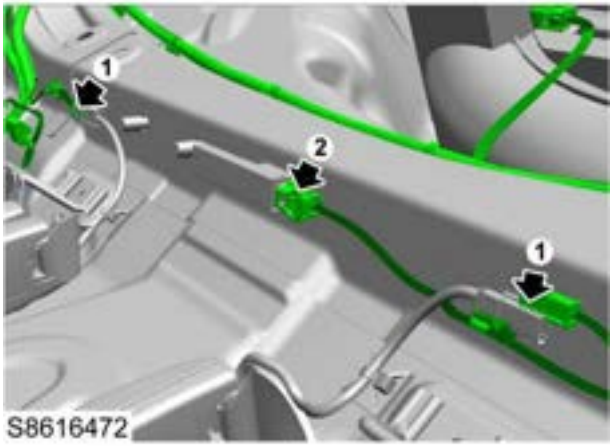

30. Disconnect the harness connector of the battery current sensor.
31. Loosen the ground terminal (1) under the 2nd row left seat belt.
32. Disconnect the harness connector (2) of the 2nd row left seat belt.

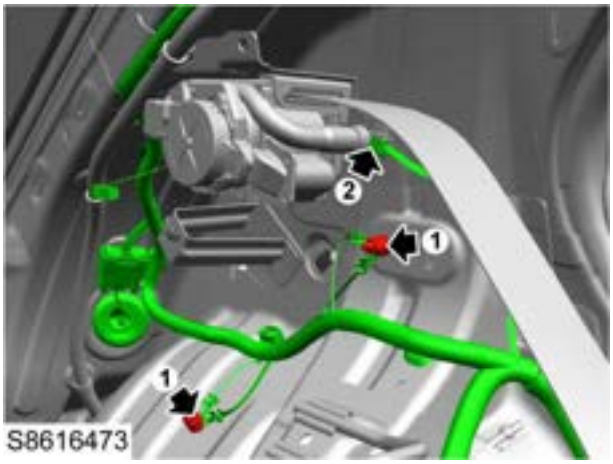

33. Remove the tail lamp assembly.

Tail Lamp Assembly Remove

34. Disconnect the harness connector (1) of the 2nd row right seat belt.
35. Loosen the ground terminal (2) under the 2nd row right seat belt.

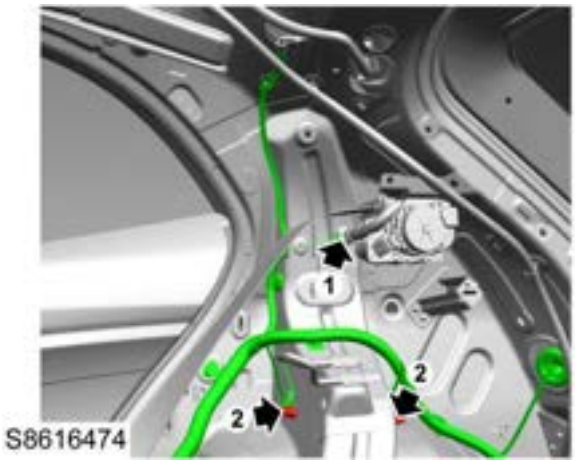

36. Disconnect the low voltage harness connector (1) of the power battery.
37. Disconnect the harness connector (2) of the power battery air inlet duct temperature sensor.

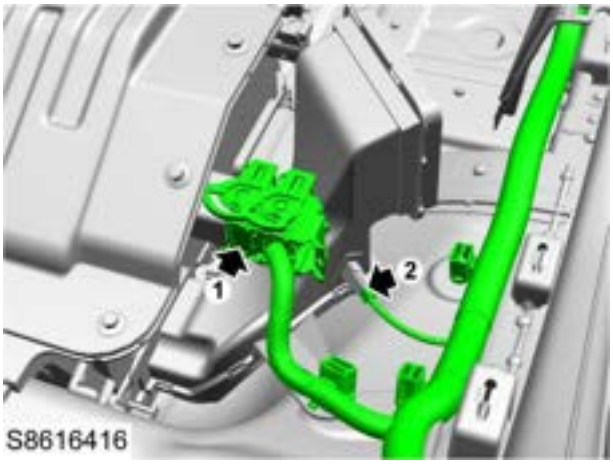

38. Disconnect the harness connector (1) of the right side impact sensor.
39. Disconnect the harness connector (2) of the front right seat belt pre-tensioner.
40. Pry off the rubber seal ring on the body side, and disconnect the body harness from the rear right door harness (3).

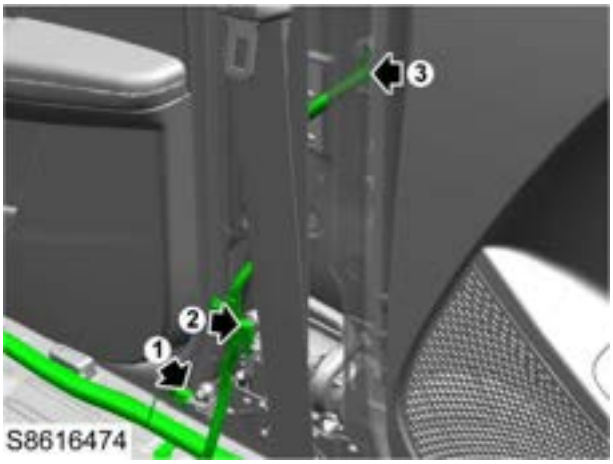

41. Loosen the ground terminal (1) under the front right door sill trim panel.
42. Disconnect the body harness from the instrument panel harness (passenger side) (2).

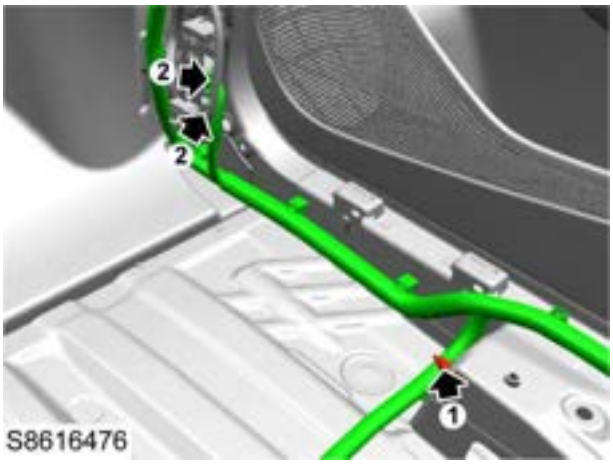

43. Loosen the ground terminal (1) under the gateway.
44. Disconnect the body harness from the front compartment harness (passenger side) (2).
45. Pry off the rubber seal ring on the body side, and disconnect the body harness from the front right door harness (3).

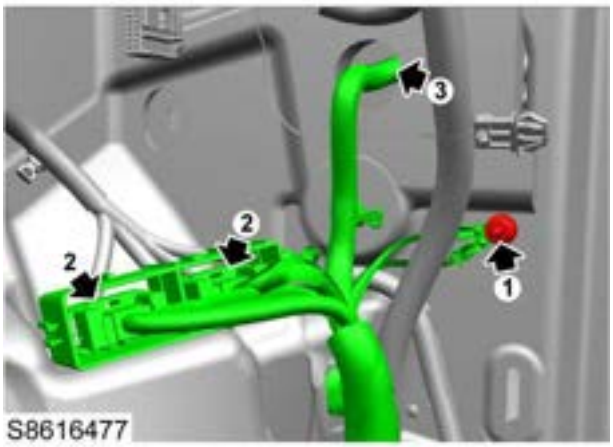

46. Remove the rear bumper assembly.

Rear Bumper Assembly Remove

47. Remove the rear wheelhouse liner assembly.

Rear Wheelhouse Liner Assembly Remove

48. Disconnect the harness connector of the PEPS antenna - rear bumper.

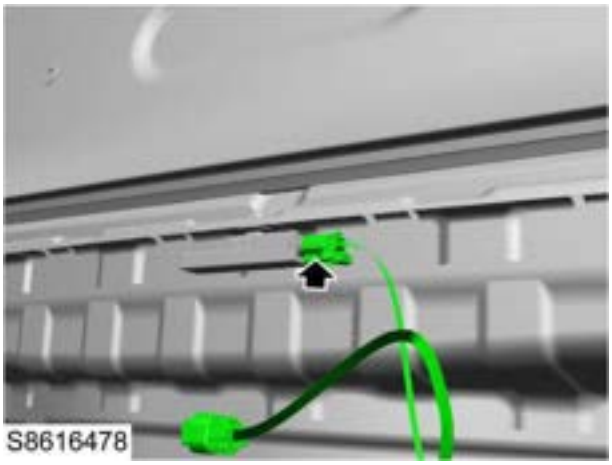

49. Disconnect the harness connector of the rear corner radar on both left and right sides (if equipped).
50. Disconnect the body harness from the oil pump harness.

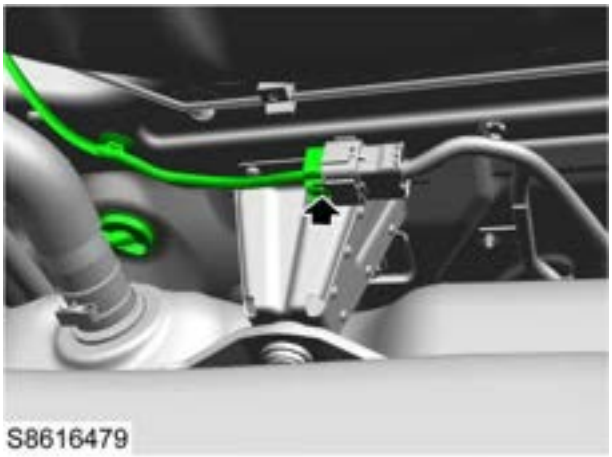

51. Loosen 1 bolt (1) fixing the body harness to the torsion beam on both left and right sides.
52. Disconnect the harness connectors (2) of the rear wheel speed sensors on both sides.
53. Disconnect the harness connectors (3) of the rear electronic parking brakes on both sides.

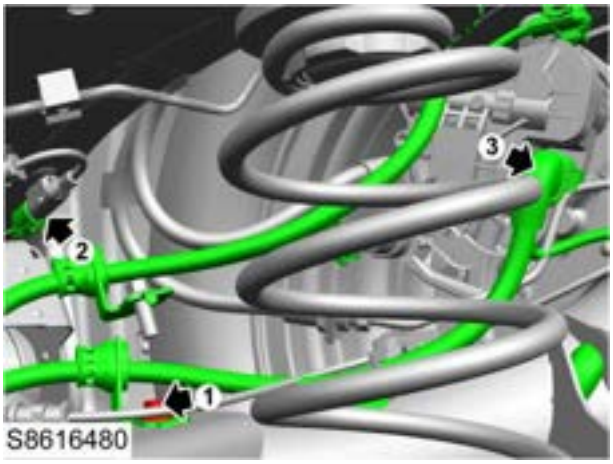

54. Loosen the harness clip, pry off the rubber seal ring and remove the body harness.

Refit

1. Arrange the harness onto the body, clamp the seal ring and secure it with clips.
2. Connect the harness connectors of the rear electronic parking brakes on both sides.
3. Connect the harness connectors of the rear wheel speed sensors on both sides.
4. Tighten 1 bolt fixing the body harness to the torsion beam on both left and right sides.
5. Connect the body harness to the oil pump harness.
6. Connect the harness connectors of the rear corner radar on both left and right sides (if equipped).
7. Connect the harness connector of the PEPS antenna - rear bumper.
8. Fit the rear wheelhouse liner assembly.

Rear Wheelhouse Liner Assembly Refit

9. Fit the rear bumper assembly.

Rear Bumper Assembly Refit

10. Connect the body harness to the front right door harness, and fit the rubber seal ring on the body side.
11. Connect the body harness to the front compartment harness (passenger side).
12. Tighten the ground terminal under the gateway.
13. Connect the body harness to the instrument panel harness (passenger side).
14. Tighten the ground terminal under the right front door sill trim panel.
15. Connect the body harness to the rear right door harness, and fit the rubber seal ring on the body side.
16. Connect the harness connector of the front right seat belt pre-tensioner.
17. Connect the harness connector of the right side impact sensor.

18. Connect the harness connector of the battery temperature air inlet duct temperature sensor.
19. Connect the harness connector of the battery temperature air inlet duct temperature sensor.
20. Tighten the ground terminal under the second row right seat belt.
21. Connect the harness connector of the second row right seat belt.
22. Fit the tail lamp assembly.

Tail Lamp Assembly Refit

23. Connect the harness connector of the second row left seat belt.
24. Tighten the ground terminal under the second row left seat belt.
25. Connect the harness connector of the battery current sensor.
26. Connect the harness connector of the PEPS antenna - rear.
27. Connect the harness connector of the second row seat belt buckle.
28. Connect the harness connector of the power unit blower.
29. Connect the harness connector of the SDM.
30. Connect the body harness to the instrument panel harness (under the front seat).
31. Connect the body harness to the rear left door harness, and pry off the rubber seal ring on the body side.
32. Connect the harness connector of the front left seat belt pre-tensioner.
33. Connect the harness connector of the left side impact sensor.
34. Tighten the ground terminal under the left front door sill trim panel.
35. Connect the body harness to the instrument panel harness (driver side).
36. Connect the body harness to the front compartment harness (driver side).
37. Tighten the ground terminal under the passenger side fuse box.
38. Connect the body harness to the front left door harness, and fit the rubber seal ring on the body side.
39. Connect the connector connecting the body harness to the BCM harness.
40. Connect the harness connector of the top USB charging module.
41. Connect the harness connector of the front view camera module.
42. Connect the harness connector of the rain sensor (if equipped).
43. Connect the harness connector to the left ceiling curtain airbag.
44. Connect the harness connector of the sunroof motor (if equipped).
45. Fit the trunk side trim panel.

Trunk Side Trim Panel Refit

46. Fit the tailgate interior trim panel.

Tailgate Interior Trim Panel Refit

47. Fit the D pillar lower trim panel.

D Pillar Lower Trim Panel Refit

48. Fit the D pillar upper trim panel.

D Pillar Upper Trim Panel Refit

49. Fit the carpet.

Carpet Refit

50. Fit the centre console assembly.

Remove the centre console assembly. Refit

51. Fit the instrument panel body assembly.

Instrument Panel Body Assembly Refit

52. Fit the interior rearview mirror base.
53. Fit the roof interior.

Roof Interior Refit

54. Connect the negative battery cable.

Front Door Harness

Remove

1. Disconnect the negative battery cable.
2. Pry off the rubber seal ring on the body side, and disconnect the connector of the front door harness and the body harness.
3. Remove the front door interior trim panel.

Front Door Interior Trim Panel Remove

4. Tear off the front door waterproof membrane.
5. Disconnect the harness connector (1) of the exterior rearview mirror.
6. Connect the harness connector (2) of the front door window regulator motor (with anti-pinch) (if equipped).
7. Connect the harness connector (3) of the front door window regulator motor (without anti-pinch).
8. Disconnect the harness connector (4) of the front door woofer.
9. Disconnect the harness connector (5) of the front door lock motor.
10. Disconnect the harness connector (6) of the front door handle antenna.

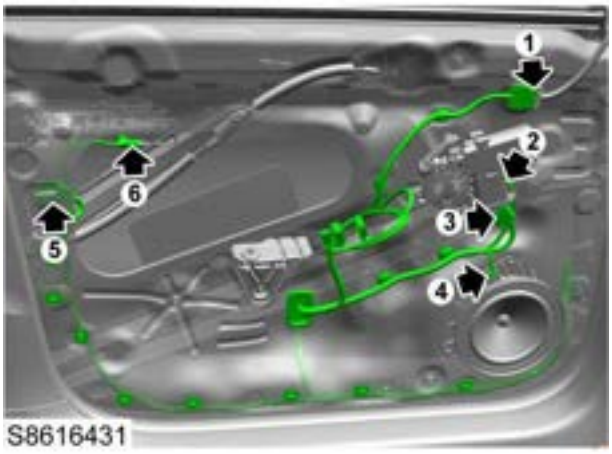

11. Loosen the harness clip and remove the front door harness.

Refit

1. Arrange the front door harness to the door and secure it with clips.
2. Connect the harness connector of the front door lock motor.
3. Connect the harness connector of the front door handle antenna.
4. Connect the harness connector of the front door woofer.
5. Connect the harness connector of the front door window regulator motor (without anti-pinch).
6. Connect the harness connector of the front door window regulator motor (with anti-pinch) (if equipped).
7. Connect the harness connector of the exterior rearview mirror.
8. Fit the front door waterproof membrane.
9. Fit the front door interior trim panel.

Front Door Interior Trim Panel Refit

10. Connect the harness connectors of the front door and the body, and fit the rubber seal rings.
11. Connect the negative battery cable.

Rear Door Harness

Remove

1. Disconnect the negative battery cable.
2. Pry off the rubber seal ring on the body side and disconnect the connector between the rear door harness and the body harness.
3. Remove the rear door interior trim panel.

Rear Door Interior Trim Panel Remove

4. Tear off the rear door waterproof membrane.
5. Disconnect the harness connector (1) of the rear door window regulator motor.
6. Disconnect the harness connector (2) of the rear door woofer.
7. Disconnect the harness connector (3) of the rear door lock motor.

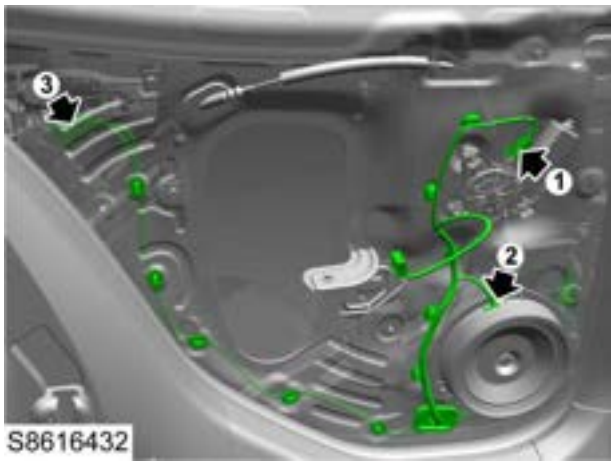

8. Loosen the harness clip and remove the rear door harness.

Refit

1. Arrange the rear door harness to the door and secure it with clips.
2. Connect the harness connector of the rear door lock motor.
3. Connect the harness connector of the rear door woofer.
4. Connect the harness connector of the rear door window regulator motor.
5. Fit the rear door waterproof membrane.
6. Fit the rear door interior trim panel.

Rear Door Interior Trim Panel Refit

7. Connect the harness connectors of the rear door and the body, and fit rubber seal rings.
8. Connect the negative battery cable.

Rear Trunk Wiring Harness Assembly

Remove

1. Disconnect the negative battery cable.
2. Remove the roof interior.

☞Roof Interior Remove

3. Remove the tailgate interior trim panel.

☞Tailgate Interior Trim Panel Remove

4. Disconnect the trunk harness from the body harness.

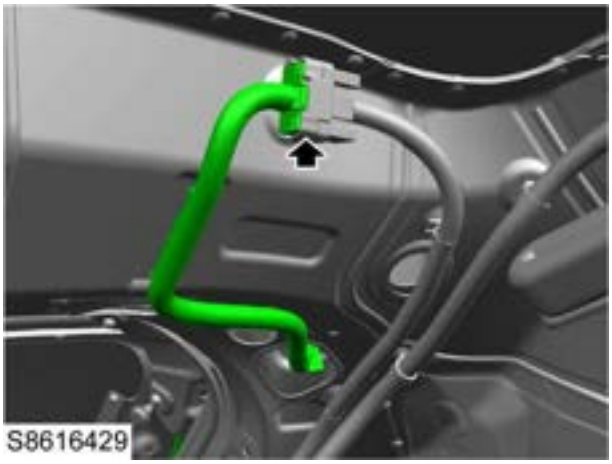

5. Disconnect the harness connector (1) of the rear combination lamp.
6. Disconnect the harness connector (2) of the rear window heating element (if equipped).
7. Disconnect the harness connector (3) of the radio antenna coil.
8. Disconnect the harness connector (4) of the tailgate lock body assembly.
9. Disconnect the harness connector (5) of the tailgate release switch..
10. Disconnect the harness connector (6) of the rear license plate lamp.
11. Disconnect the harness connector (7) of the rear window wiper motor.

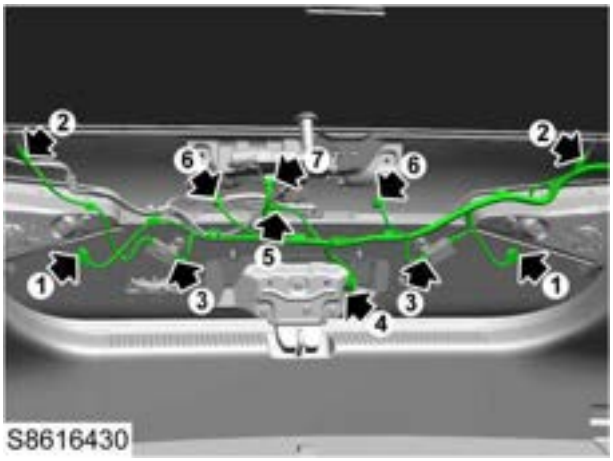

12. Loosen the harness clip, and remove the trunk harness.

Refit

1. Locate the harness to the mounting position, and secure it with clips.
2. Connect the harness connector of the rear window wiper motor.
3. Connect the harness connector of the rear license plate lamp.
4. Connect the harness connector of the tailgate release switch.
5. Connect the harness connector of the tailgate lock assembly.
6. Connect the harness connector of the radio antenna coil.
7. Connect the harness connector of the rear window glass heating element (if equipped).
8. Connect the harness connector of the rear combination lamp.
9. Connect the trunk harness to the body harness.
10. Fit the tailgate interior trim panel.

☞Tailgate Interior Trim Panel Refit

11. Fit the roof interior.

☞Roof Interior Refit

12. Connect the negative battery cable.

Centre Console Harness

Remove

1. Disconnect the negative battery cable.
2. Remove the centre console assembly.

☞ **Centre Console Assembly Remove**

3. Disconnect the harness connector (if equipped) of the mobile phone wireless charging module.
4. Disconnect the harness connector of the anti-theft antenna coil.
5. Disconnect the harness connector of the rear USB charging module.
6. Loosen the harness clips and remove the centre console harness.

Refit

1. Locate the harness to the centre console and secure it with clips.
2. Connect the harness connector of the rear row USB charging module.
3. Connect the harness connector of the immobiliser antenna coil.
4. Connect the harness connector of the mobile phone wireless charging module (if any).
5. Fit the centre console assembly.

☞ **Centre Console Assembly Refit**

6. Connect the negative battery cable.

Fuel Pump Harness

Remove

1. Disconnect the negative battery cable.
2. Remove the fuel tank assembly.

☞ **Fuel Tank Assembly Remove**

3. Disconnect the fuel tank harness from the body harness.

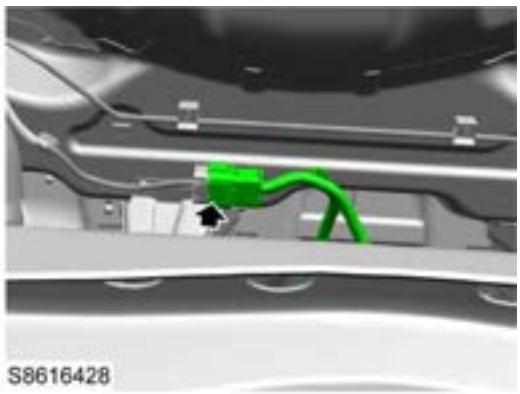

4. Loosen the harness clips and remove the fuel tank harness.

Refit

1. Locate the harness to the body and secure it with clips.
2. Connect the fuel tank harness to the body harness.
3. Fit the fuel tank assembly.

☞ **Fuel tank assembly Refit**

4. Connect the negative battery cable.

Auxiliary Power

Service Guide

Remove

1. Disconnect the negative battery cable.
2. Remove the centre console assembly.

☞ **Centre Console Assembly Remove**

3. Disconnect the harness connector, loosen the clips and remove the power socket.

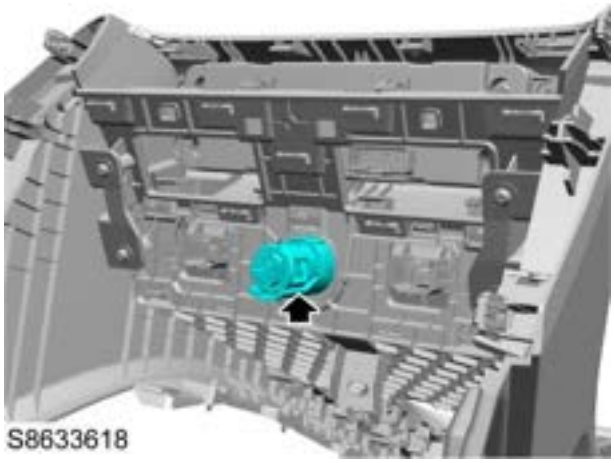

Refit

1. Connect the harness connector.
2. Engage the power socket into the centre console trim panel, and ensure that the clips are fully engaged.
3. Fit the centre console assembly.

☞ **Centre Console Assembly Refit**

4. Connect the negative battery cable.

USB Charging Module

Remove

1. Disconnect the negative battery cable.
2. Remove the rear USB module.
   a. Remove the centre console rear panel.

☞ **Centre Console Rear Panel Remove**

   b. Remove 2 screws fixing the USB module to the centre console rear panel, and remove the rear USB module.

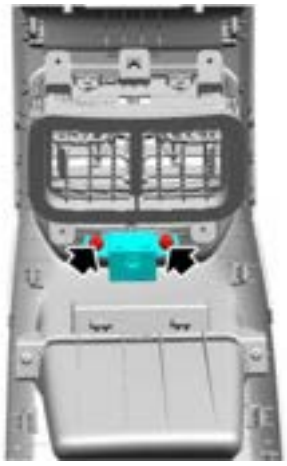

3. Remove the overhead console USB module.
   a. Remove the interior rearview mirror cover.
   b. Loosen the clips fixing the USB module to the interior rearview mirror base, disconnect the harness connector, and remove the overhead console USB module.

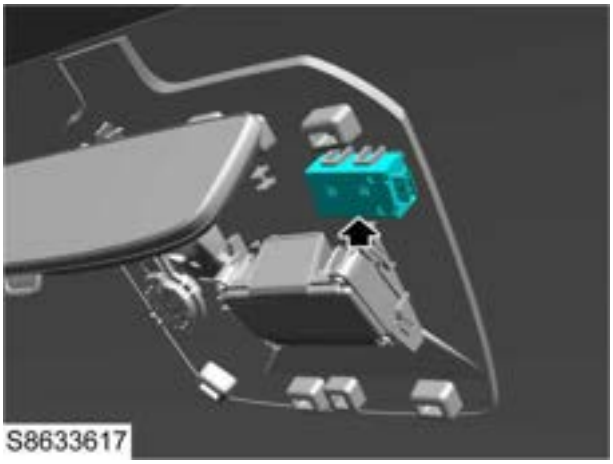

Refit

1. Fit the rear USB module.
   a. Fix the USB module to the centre console rear panel, fit 2 screws, tighten them to **1.4-1.8NM** , and check the torque.
   b. Fit the centre console rear panel.

☞ **Centre Console Rear Panel Refit**

2. Fit the overhead console USB module.
   a. Connect the harness connector.

b. Fix the USB module to the interior rearview mirror base, and ensure that the clips are fully engaged.

c. Fit the interior rearview mirror cover.

3. Connect the negative battery cable.

Mobile Phone Wireless Charging System

Specification

Torque

Description and Operation

System Layout

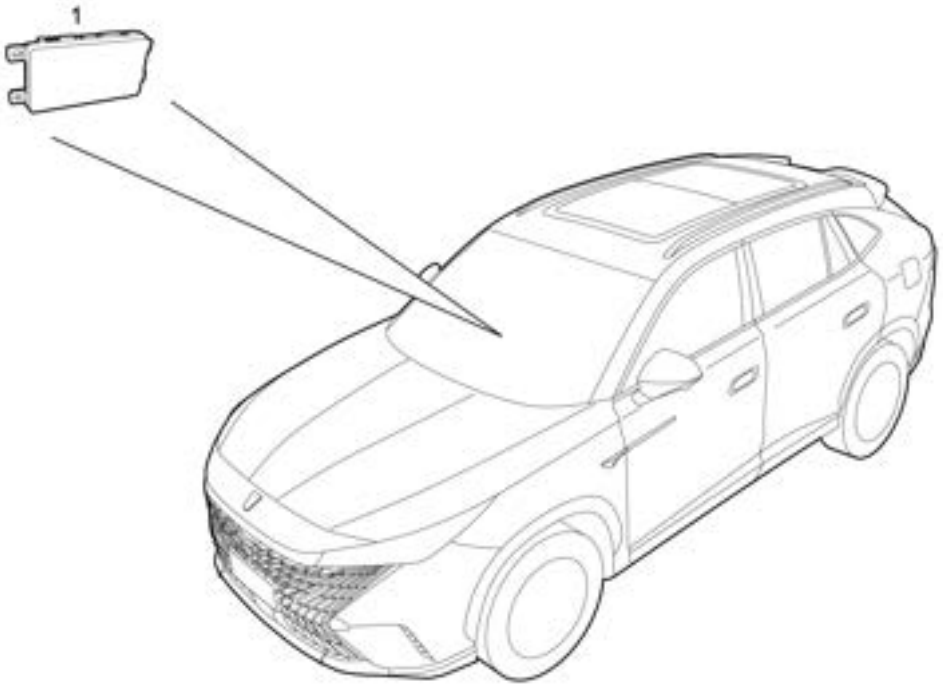

S7310082

1. Mobile Phone Wireless Charging Module

Description

The mobile phone wireless charging function is achieved by electromagnetic induction transmission mode, without using a wire to connect the mobile phone. Mobile phone wireless charging function is not applicable to all mobile phones but to those authenticated by Qi.

When the Start switch is in the ACC/ON/RUNNING position, the wireless charging function is activated.

Detailed Information List of Component Pins

End View and Pin Information of Wireless Charging Module Harness Connector CS006

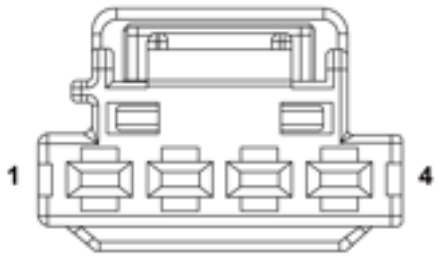

Pin No.	Description
1	Power Supply
2	Enable
3	BCM LIN Bus
4	Ground

Service Guide

Mobile Phone Wireless Charging Module

Remove

1. Disconnect the negative battery cable.
2. Remove the centre console assembly.

☞ Centre Console Assembly

3. Remove 4 screws fixing the mobile phone wireless charging module to the centre console, and remove the mobile phone wireless charging module.

Refit

1. Fix the mobile phone wireless charging module to the centre console, fit 4 screws, tighten them to TBD, and check the torque.
2. Fit the centre console assembly.

Centre Console Assembly

3. Connect the negative battery cable.

Module Self-Learning and Programming

Engine Control Module (ECM)

Scenario and Function

Scenario	Refresh	Configuration	Electronic Throttle Self-learning	Engine Control Module Self-learning Value Reset	Backup of Throttle De-Icing Frequency Value	Reset of Throttle De-Icing Frequency Value	Write-in of Throttle De-Icing Frequency Value	Operating Steps
Engine Control Module Software Refresh	①							SIPS - Programming and Coding - ECM - Refresh
Engine Control Module Software Configuration		①						SIPS - Programming and Coding - ECM - Configuration
Engine Control Module Replacement	②	③	⑤	④	①		⑥	SIPS - Programming and Coding - ECM - Replacement SIPS - Fast Channel - Engine Control Module Self-learning Value Reset SIPS - Fast Channel - Electronic Throttle Self-learning
Electronic Throttle Replacement			①			②		SIPS - Fast Channel - Electronic Throttle Self-learning

Number in ◯ describes the sequence of performing the functional operations

Engine Control Module Refresh

Function Description

This function is used for updating the application or calibration software of the engine control module, and modifying the corresponding control functions.

Operation Conditions

1. Place the shift lever in P or N position
2. The Start switch is in ON position
3. The vehicle is not started

Result Verification

- Confirm that the application software version of ECU is correct.

Engine Control Module Configuration

Function Description

This function is used for configuring each control function of ECU according to actual characteristics of the vehicle and writing VIN.

Operation Conditions

1. Place the shift lever in P or N position
2. The Start switch is in ON position
3. The vehicle is not started

Result Verification

- The configuration process ends normally
- The configuration file version of ECU is correct

Electronic Throttle Self-learning

Function Description

This function is used to perform the electronic throttle self-learning after replacement with a new ECM, so as to enable mutual recognition, communication and cooperation between the new module and the throttle, and further realize the precise control of throttle opening in accordance with the load.

Operation Conditions

1. Place the shift lever in P or N position
2. The Start switch is in ON position
3. The vehicle is not started

Result Verification

- The whole process ends normally

Engine Control Module Self-learning Value Reset

Function Description

This function is used to reset the original self-learning value stored in the module, and then the module can learn a new value suitable for the current vehicle according to the specific conditions of the vehicle.

Operation Conditions

1. Place the shift lever in P or N position
2. The Start switch is in ON position
3. The vehicle is not started

Result Verification

- The whole process ends normally
- The vehicle starts normally

Backup of Throttle De-Icing Frequency Value

Function Description

When the old ECM can communicate, back up the throttle de-icing frequency value in the old ECM, and ensure that the ECM on the current vehicle is the old one.

Operation Conditions

1. Place the shift lever in P or N position
2. The Start switch is in ON position
3. The vehicle is not started
4. The ECM on the current vehicle is the old one

Result Verification

- The whole process ends normally
- The vehicle starts normally

Reset of Throttle De-Icing Frequency Value

Function Description

After replacing the throttle, clear the throttle de-icing frequency recorded in the engine control module.

Operation Conditions

1. Place the shift lever in P or N position
2. The Start switch is in ON position
3. The vehicle is not started

Result Verification

- The whole process ends normally
- The vehicle starts normally

Write-in of Throttle De-Icing Frequency Value

Function Description

This function is used when the old ECM can communicate. After replacing the ECM, write the throttle de-icing frequency in the old ECM into the new ECM.

Operation Conditions

1. Place the shift lever in P or N position
2. The Start switch is in ON position
3. The vehicle is not started
4. The ECM on the current vehicle is new
5. The new ECM has successfully performed the replacement function on the SIPS

Result Verification

- The whole process ends normally
- The vehicle starts normally

Drive Motor Control Module (PEU)

Scenario and Function

Scenario	Refresh	Configuration	Settings - Anti-theft Matching	PEU Motor Zero Position Angle Backup	PEU Motor Zero Position Angle Write-in - Backup Value	PEU Motor Zero Position Angle Write-in - Manual Input	Operating Steps
PEU Refresh	①						SIPS - Programming and Coding - PEU - Refresh
PEU Configuration		①					SIPS - Programming and Coding - PEU - Configuration
PEU Replacement - Old PEU Has Communication	②	③	④	①	⑤		SIPS - Fast Channel - PEU Motor Zero Position Angle Backup SIPS - Programming and Coding - PEU - Replacement SIPS - Fast Channel - PEU Motor Zero Position Angle Write-in - Write PEU Controller Old Backup Value
PEU Replacement - Old PEU Has No Communication	①	②	③			④	SIPS - Programming and Coding - PEU - Replacement SIPS - Fast Channel - PEU Motor Zero Position

							Angle Write-in - Manual Input
After the motor angle-related DTC or drive motor performance abnormalities occurred						①	SIPS - Fast Channel - PEU Motor Zero Position Angle Write-in - Manual Input

Number in ◯ describes the sequence of performing the functional operations

PEU Refresh

Function Description

This function is used for updating the internal application or calibration softwares of ECU, and modifying the corresponding control functions.

Operation Conditions

1. Place the shift lever in P position.
2. Power on the vehicle before operation, and ensure that the "READY" lamp is not illuminated.
3. The driver seat is not occupied during the whole operation.
4. 12V battery is charged from external power source before operation.
5. Vehicle is not charged.

Result Verification

- The refresh process ends normally.
- The application software version of ECU is correct.

PEU Configuration

Function Description

This function is used for configuring each control function of ECU according to actual characteristics of the vehicle and writing VIN.

Operation Conditions

1. Place the shift lever in P position.
2. Power on the vehicle before operation, and ensure that the "READY" lamp is not illuminated.
3. The driver seat is not occupied during the whole operation.
4. 12V battery is charged from external power source before operation.
5. Vehicle is not charged.

Result Verification

- The configuration process ends normally.
- The configuration file version of ECU is correct.

Settings - Anti-theft Matching

Function Description

PEU is an anti-theft related module; after the PEU is replaced with a new one, it is required to perform anti-theft matching, which includes PIN code write-in and key matching. After the anti-theft matching is successfully completed, the vehicle can be started normally.

Operation Conditions

1. Place the shift lever in P position.
2. Power on the vehicle before operation, and ensure that the "READY" lamp is not illuminated.
3. The driver seat is not occupied during the whole operation.
4. 12V battery is charged from external power source before operation.
5. Vehicle is not charged.

Result Verification

- The anti-theft matching process ends normally.

PEU Motor Zero Position Angle Backup

Function Description

This function reads and backs up the original motor angle information from the old PEU for subsequent writing to the newly replaced PEU.

Operation Conditions

1. Place the shift lever in P position.
2. Power on the vehicle before operation, and ensure that the "READY" lamp is not illuminated.
3. The driver seat is not occupied during the whole operation.
4. 12V battery is charged from external power source before operation.
5. Vehicle is not charged.

Result Verification

- The execution process ends normally.

PEU Motor Zero Position Angle Write-in - Backup Value

Function Description

This function is to write the original motor angle information that has been backed up into the newly replaced PEU.

Operation Conditions

1. Place the shift lever in P position.
2. Power on the vehicle before operation, and ensure that the "READY" lamp is not illuminated.
3. The driver seat is not occupied during the whole operation.
4. 12V battery is charged from external power source before operation.
5. Vehicle is not charged.

Result Verification

- The execution process ends normally.

PEU Motor Zero Position Angle Write-in - Manual Input

Function Description

This function is to manually write the motor angle information on the motor nameplate into the newly replaced PEU.

See "Power Electronics Box -PEU- Refit" for the location and angle information of the motor nameplate.

Operation Conditions

1. Place the shift lever in P position.
2. Power on the vehicle before operation, and ensure that the "READY" lamp is not illuminated.
3. The driver seat is not occupied during the whole operation.
4. 12V battery is charged from external power source before operation.
5. Vehicle is not charged.

Result Verification

- The execution process ends normally.

Shifter Control Unit (SCU)

Scenario and Function

Scenario	Refresh	Configuration	Operating Steps
SCU Refresh	①		SIPS - Programming and Coding - SCU - Refresh
SCU Configuration		①	SIPS - Programming and Coding - SCU - Configuration
SCU Replacement	①	②	SIPS - Programming and Coding - SCU - Replacement

Number in ◯ describes the sequence of performing the functional operations

A. SCU Refresh

Function Description

This function is used for updating the internal application and calibration softwares of ECU so as to realize the upgrade of corresponding control logic and control functions.

Operation Conditions

1. Place the shift lever in P position.
2. Power on the vehicle before operation, and ensure that the "READY" lamp is not illuminated.
3. The driver seat is not occupied during the whole operation.
4. 12V battery is charged from external power source before operation.

Result Verification

- The refresh process ends normally.
- The application software version of ECU is correct.

B. SCU Configuration

Function Description

This function is used for configuring each control function of ECU according to actual characteristics of the vehicle and writing VIN.

Operation Conditions

1. Place the shift lever in P position.
2. Power on the vehicle before operation, and ensure that the "READY" lamp is not illuminated.
3. The driver seat is not occupied during the whole operation.
4. 12V battery is charged from external power source before operation.

Result Verification

- The configuration process ends normally.
- The configuration file version of ECU is correct.

Heating, Ventilation and Air Conditioning Control Module (HVAC)

Scenario and Function

Scenario	Refresh	Configuration	Self-learning	Operating Steps
A/C Control Module Replacement	①	②	③	SIPS - Programming and Coding - HVAC - Replacement
A/C Control Module Refresh	①	②	③	SIPS - Programming and Coding - HVAC - Refresh
A/C Control Module Configuration		①		SIPS - Programming and Coding - HVAC - Configuration
Any Actuator with Feedback Signal Replacement or A/C Box Replacement			①	SIPS - Fast Channel - A/C Damper Actuator Self-learning
Damper position changes involved during refit/remove			①	SIPS - Fast Channel - A/C Damper Actuator Self-learning

Number in ◯ describes the sequence of performing the functional operations

Refresh

Function Description

This function is used for updating the internal application and calibration software of ECU so as to realize the upgrade of ECU control logic and control functions.

Operation Conditions

1. Place the shift lever in P or N position;
2. The Start switch is in ON position;
3. The vehicle is not started.

Result Verification

1. The ECU refresh process ends normally;
2. Check if the A/C system operates properly and there is no relevant DTC for the control module;
3. Check and confirm that the application and calibration software versions of ECU are correct.

Configuration

Function Description

This function is used for configuring each control function of ECU according to actual characteristics of the vehicle and writing VIN.

Operation Conditions

1. Place the shift lever in P or N position;
2. The Start switch is in ON position;
3. The vehicle is not started.

Result Verification

1. The ECU configuration process ends normally;
2. Check if the A/C system operates properly and there is no relevant DTC for the control module;
3. Check that the configuration file version of ECU is correct.

A/C Damper Actuator Self-learning

Function Description

To eliminate such problems as damper air leakage due to manufacture or assembly error, and windscreen fogging resulted from it, perform a self-learning for the A/C damper actuator.

Operation Conditions

1. Place the shift lever in P or N position;
2. The Start switch is in ON position;
3. The vehicle is not started.
4. No damper actuator related DTC is available.

Result Verification

- The ECU self-learning process ends normally;
- Check if the A/C system operates properly and there is no relevant DTC for the control module.

Body Control Module (BCM)

Scenario and Function

Scenario	Refresh	Configuration	Anti-theft Matching	Key Addition	Key Deletion	Tyre Sensor Learning	Operating Steps
BCM Refresh	①	②					SIPS - Programming and Coding - BCM - Refresh
BCM Configuration		①					SIPS - Programming and Coding - BCM - Configuration
BCM Replacement	①	②	③	④		⑤	SIPS - Programming and Coding - BCM - Replacement
New Key Addition				①			SIPS - Programming and Coding - BCM - Key Addition
Key Deletion					①		SIPS - Programming and Coding - BCM - Key Deletion
Tyre Sensor Replacement						①	SIPS - Fast Channel - Tyre Sensor Learning
Tyre Sensor Mounting Position Change (Such as wheel rotation)						①	SIPS - Fast Channel - Tyre Sensor Learning

Number in ◯ describes the sequence of performing the functional operations

BCM Refresh

Function Description

This function is used for updating the internal application and calibration software of BCM (Body Control Module) so as to realize the upgrade of BCM control logic and control functions.

Operation Conditions

1. Place the shift lever in P or N position.
2. The Start switch is in ON position.
3. The vehicle is not started.

Result Verification

1. The ECU refresh process ends normally;
2. Check that the BCM (Body Control Module) functions normally and the control module has no relevant DTCs;

3. Check and confirm that the application and calibration software versions of ECU are correct.

BCM Configuration

Function Description

This function is used for configuring each control function of BCM (Body Control Module) according to actual characteristics of the vehicle and writing VIN.

Operation Conditions

1. Place the shift lever in P or N position.
2. The Start switch is in ON position.
3. The vehicle is not started.

Result Verification

1. The ECU configuration process ends normally;
2. Check that the BCM (Body Control Module) functions normally and the control module has no relevant DTCs;
3. Check that the configuration file version of ECU is correct.

Anti-theft Matching

Function Description

BCM (Body Control Module) is an anti-theft related module; after the BCM is replaced with a new one, it is required to perform anti-theft matching, which includes PIN code write-in and key matching. After the anti-theft matching is successfully completed, the vehicle can be started normally.

Operation Conditions

1. Place the shift lever in P or N position.
2. Turn on the double flashing lights.
3. The vehicle is not started.

Result Verification

1. Use the key to unlock, lock, start and other operations. The vehicle functions are normal.

Key Addition

Function Description

Add and match a new key to the body control module (BCM); the new key can unlock, lock and start the vehicle after being successfully added.

Operation Conditions

1. Place the shift lever in P or N position.
2. The Start switch is in ON position.
3. The vehicle is not started.
4. Turn on the double flashing lights.
5. Insert the key to be added into the Start switch or place it in the standby starting position, and place the other keys outside the car.

Result Verification

1. Use the added key to unlock, lock, start and other operations. The vehicle functions are normal.

Key Deletion

Function Description

Delete the existing key in the body control module (BCM); the deleted key is unable to unlock/lock or start the vehicle after being deleted successfully.

Operation Conditions

1. Place the shift lever in P or N position.
2. The Start switch is in ON position.
3. The vehicle is not started.
4. Insert the key to be reserved into the Start switch or place it in the standby starting position, and place the other keys outside the car.

Result Verification

1. The secret key self-learning process ends normally;
2. The key functions normally and the control module has no relevant DTCs;

Tyre Sensor Learning

Function Description

This function is used for tyre sensor learning after replacement of tyre sensor or change of its mounting position, and writing the ID information of the fixed tyre sensor into the ECU.

Operation Conditions

Note：When a learning is performed for the new tyre sensor, drive the vehicle at a speed greater than 40 km/h for more than 10 minutes consecutively before learning or noting the ID value on the new tyre sensor.

Note：When continuous learnings need to be performed for several tyre sensors, the interval between two learnings shall not be less than 2 minutes.

1. Place the shift lever in P or N position.
2. The Start switch is in ON position.
3. The vehicle is not started.

Result Verification

- Read the ID value of the tyre sensor, which is valid and matching the actual ID value in the tyre sensor;
- The tyre pressure value on the tyre inflator gauge changes accordingly.

Troubleshooting

Abnormal Result	Recommended Treatment
EPROM Write Error	Power off to reset and execute Routine again.

Window Regulator Initialisation

Scenario and Function

Scenario	Window Regulator Initialisation	Operating Steps
Battery disconnected during window up or down movement	①	Fully open the window, briefly and consecutively lift the switch to ascend the window to the top, then lift and hold the switch for about 5 s.
Window Regulator Replacement	①	

Number in ◯ describes the sequence of performing the functional operations

Window Regulator Initialisation

Function Description

For windows with "One-touch Up" and "Anti-pinch" functions, this operation is used to restore the normal "One-touch Up" and "Anti-pinch" functions of the power windows after failure.

Operation Conditions

1. After the vehicle is powered on.

Result Verification

- The "One-touch Up" and "Anti-pinch" functions of the window switch are restored.

Sunroof

Scenario and Function

Scenario	Sunroof Glass Initialization	Sunroof Sunshade Initialisation	Operating Steps
The sunroof assembly has been removed	①	②	1. Push the sunroof glass switch forward to the second position and hold for about 10 seconds, and the glass will automatically slide open for a distance and then fully close, during which the switch shall be kept in the second position. 2. Push the sunshade switch forward to the second position and hold for about 10 seconds, and the sunshade will automatically slide open for a distance and then fully close, during which the switch shall be kept in the second position.
Power failure occurs during operation of the sunroof glass	①		Push the sunroof glass switch forward to the second position and hold for about 10 seconds, and the glass will automatically slide open for a distance and then fully close, during which the switch shall be kept in the second position.
The following related components have been removed or repaired: glass, glass motor	①		
Power failure occurs during operation of the sunshade		①	Push the sunshade switch forward to the second position and hold for about 10 seconds, and the sunshade will automatically slide open for a distance and then fully close, during which the switch shall be kept in the second position.
The following related components have been removed or repaired: sunshade, sunshade motor		①	

Number in ◯ describes the sequence of performing the functional operations

Sunroof Glass Initialization

Function Description

This function is used for initializing the sunroof glass after power-on when power failure occurs during operation of the sunroof glass or the power glass sunroof assembly or related components have been removed or repaired.

Operation Conditions

1. Turn the Start switch to "ACC" or "ON/RUNNING" position.
2. Fully close the sunroof glass manually.

Result Verification

Operate the sunroof switch, and all operating functions are normal.

Module Self-Learning and Programming

Note : Failure to perform initialization may lead to sunroof glass ajar, or invalid anti-trap function of sunroof glass, or no response of sunroof glass to some switch operations.

Sunroof Sunshade Initialisation

Function Description

This function is used for initializing the sunshade after power-on when power failure occurs during operation of the sunroof sunshade or the power sunshade assembly or related components have been removed or repaired.

Operation Conditions

1. Turn the Start switch to "ACC" or "ON/RUNNING" position.
2. Fully close the power sunshade manually.

Result Verification

Operate the sunroof sunshade switch, and all operating functions are normal.

Note : Failure to perform initialization may lead to sunroof sunshade ajar, or invalid anti-trap function of sunroof sunshade, or no response of sunroof sunshade to some switch operations.

Gateway Control Module (GW)

Scenario and Function

Scenario	Refresh	Configuration	Power Mode Adjustment	Battery ID Write-in	Operating Steps
GW Refresh	①				SIPS - Programming and Coding - GW - Refresh
GW Configuration		①			SIPS - Programming and Coding - GW - Configuration
GW Replacement	①	②	③		SIPS - Programming and Coding - GW - Replacement
PDI inspection before new vehicle delivery			①		SIPS - Fast Channel - GW Power Mode Adjustment
Battery Replacement Battery Sensor Replacement				①	SIPS - Fast Channel - Battery ID Write-in

Number in ◯ describes the sequence of performing the functional operations

GW Refresh

Function Description

This function is used for updating the internal application and calibration software of the gateway module (GW) so as to realize the upgrade of GW control logic and control functions.

Operation Conditions

1. The shift lever is in P or N gear.
2. The Start switch is in ON position.
3. The vehicle is not started

Result Verification

1. The ECU refresh process ends normally;
2. Check that the gateway module (GW) functions normally and the control module has no relevant DTCs;
3. Check and confirm that the application and calibration software versions of ECU are correct.

GW Configuration

Function Description

This function is used for configuring each control function of the gateway module (GW) according to actual characteristics of the vehicle and writing VIN.

Operation Conditions

1. The shift lever is in P or N gear.
2. The Start switch is in ON position.
3. The vehicle is not started

Result Verification

1. The ECU configuration process ends normally;
2. Check that the gateway module (GW) functions normally and the control module has no relevant DTCs;
3. Check and confirm that the configuration file version of ECU is correct.

GW Power Mode Adjustment

Function Description

Before the new vehicle is delivered to a customer or after replacing with a new gateway module (GW), to avoid the failure of some functions controlled by GW, it is required to check the power mode of the GW and ensure it is in normal mode.

Operation Conditions

1. The shift lever is in P or N gear.
2. The Start switch is in ON position.
3. The vehicle is not started

Result Verification

1. The power mode adjustment process ends normally;
2. Check that the function is normal and the control module has no relevant DTCs;

Module Self-Learning and Programming

For vehicles transported within 100km, it is possible to enter/exit the transportation mode by manual operation.

Operation Conditions

To manually exit the transportation mode, perform the following operations

1. When the vehicle is in the OFF state, press the Start switch twice to enter the ON state. At this time, the instrument illuminates, but the vehicle does not start.
2. The shift lever is in P position.
3. Within 2 seconds, turn on the left direction indicator lamp and depress the brake pedal three times continuously.
4. The message "Vehicle in Transportation Mode, Some Functions Limited" pops up on the display. Meanwhile, the status bar displays "Transportation Mode", indicating that the transportation mode has been successfully enabled.

To manually exit the transportation mode, perform the following operations

1. When the vehicle is in the OFF state, press the Start switch twice to enter the ON state. At this time, the instrument illuminates, but the vehicle does not start.
2. The shift lever is in P position.
3. Within 2 seconds, turn on the left direction indicator lamp and depress the brake pedal three times continuously.
4. The message "Vehicle in Normal Mode, Function Limitations Removed" pops up on the display. Meanwhile, "Transportation Mode" in the status bar disappears, indicating that the transportation mode has been successfully exited.

Battery ID Write-in

Function Description

After replacing with a new battery sensor or battery, the Battery ID Write-in operation must be performed.

Operation Conditions

1. The shift lever is in P or N gear.
2. The Start switch is in ON position.
3. The vehicle is not started

Result Verification

1. The battery ID write-in process ends normally;
2. The control module has no relevant DTCs;

Supplemental Restraint System Sensing and Diagnostic Module (SDM)

Scenario and Function

Scenario	Refresh	Configuration	Activation	Operating Steps
SDM Refresh	①			SIPS - Programming and Coding - SDM - Refresh
SDM Replacement	①	②	③	SIPS - Programming and Coding - SDM - Replacement

Number in ◯ describes the sequence of performing the functional operations

SDM Refresh

Function Description

This function is used for updating the internal application or calibration software of ECU, and modifying the corresponding control functions.

Operation Conditions

1. Place the shift lever in P or N position
2. The Start switch is in "ON" position
3. The vehicle is not started

SDM Configuration

Function Description

This function is used for configuring each control function of SDM according to actual characteristics of the vehicle and writing VIN.

Operation Conditions

1. Place the shift lever in P or N position
2. The Start switch is in "ON" position
3. The vehicle is not started

SDM Activation

Function Description

This function is used for activating SDM deployment, EDR recording and other related functions when replacing the SDM.

Operation Conditions

1. Place the shift lever in P or N position
2. The Start switch is in "ON" position
3. The vehicle is not started

Front View Camera Module (FVCM)

Scenario and Path

Scenario	Refresh	Configuration	Self-learning	Operating Steps
Software Upgrading	①			SIPS - Programming and Coding - FVCM - Refresh
Configuration		①		SIPS - Programming and Coding - FVCM - Configuration
ECU Replacement	①	②	③	SIPS - Programming and Coding - FVCM - Replacement
During windscreen replacement or other operations related to module refit/remove			①	SIPS - Fast Channel - Front View Camera Module Self-learning

Number in ◯ describes the sequence of performing the functional operations

FVCM Refresh

Function Description

This function is used for updating the internal application and calibration software of ECU so as to realize the upgrade of ECU control logic and control functions.

Operation Conditions

1. Place the shift lever in P position;
2. Place the start switch in ON position;
3. The vehicle does not start;

Result Verification

1. The ECU refresh process ends normally;
2. Check that the intelligent driving system functions normally and the control module has no relevant DTCs;
3. Check and confirm that the application and calibration software versions of ECU are correct.

FVCM Configuration

Function Description

This function is used for re-configuring each control function of ECU and writing VIN.

Operation Conditions

1. Place the shift lever in P position;
2. Place the start switch in ON position;
3. The vehicle does not start;

Result Verification

1. The ECU configuration process ends normally;
2. Check that the intelligent driving system functions normally and the control module has no relevant DTCs;
3. Check that the configuration file version of ECU is correct.

FVCM Self-learning

Function Description

This function is used for calibrating the relative position of the module in the vehicle after the replacement of ECU, the replacement and repair of the windscreen or other operations related to module refit/remove. The module completes the self-learning by the method of calibrating during travelling after the sale.

Operation Conditions

1. Place the shift lever in P position;
2. Place the start switch in ON position;
3. The vehicle does not start;

Note：

Learning process: the vehicle must travel for a period of time on a long straight road with clearly visible lane lines on both sides at a speed of no less than 40km/h and no more than 60km/h (the specific learning time depends on the road conditions).

Note：

When the module calibration is 100% completed, turn the power off and wait for one minute (avoid operations like opening/closing the door, the window or turning on/off the entertainment mainframe, which will wake the bus up), then turn the power on again.

Result Verification

1. The FVCM self-learning process ends normally;
2. Check that the intelligent driving system functions normally and the control module has no relevant DTCs;

360° AVM Camera

AVM Calibration

Around View Monitor (AVM) system can be calibrated to realize the image stitching function. Failure to calibrate it may lead to error in the panoramic stitching, image deformation or misalignment due to error of the camera parameter and installation angle.

Calibration is required after replacement of control module or camera, or in case of accidental movement of camera parts or camera.

Requirements for Calibration

Requirements for Calibration Tools

The special tool TEL00053 is required for calibration, and the calibration cloth is as follows:

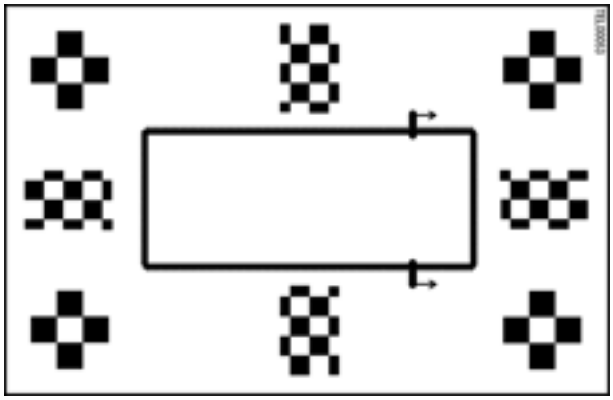

Requirements for Placement and Location of Calibration Tools

The plan is implemented by driving the vehicle into the calibration station, then framing the calibration cloth around the vehicle, and adjusting the position of the calibration cloth to enable the vehicle to meet the following location accuracy requirements before calibration.

1. Preparation of calibration station: Before calibration, check the calibration station to verify that its dimensions meet the requirements and ensure that the calibration cloth is clean and the calibration equipment operates properly;
2. Drive the vehicle into the calibration station;
3. Lay the calibration cloth, and verify that the vehicle is in the dead center of the calibration cloth.
   - Align the front axes indicated on the calibration cloth with the central points of two front wheels respectively;
   - Move the calibration cloth so that its left inner edge is parallel with the straight line formed by the central points of the front left and rear left wheels;
   - Move the calibration cloth to ensure that its left inner edge and right inner edge are kept at the same distance from the left and right wheels.
4. After the calibration, remove the calibration cloth from the vehicle, fold and roll it as required with paper element, and put it into a carton.

Procedures for Calibration (method 1)

Use the maintenance ID to log into the system, and enter the engineering mode.

1. Before calibration, always check whether the calibration cloth is placed smoothly, neat and clean. Check whether the environment is too dark or reflective, which may cause the calibration failure.
2. Tap [360° AVM Calibration] to enter the calibration selection interface.
3. Select Automatic Calibration, and the system enters the calibration interface. If the calibration is successful, a prompt message of "Calibration Successful" appears in the centre of the interface.
4. When the automatic calibration fails, check the relevant items if there is an error prompt. Recalibrate after eliminating the error.

Procedures for Calibration (method 2)

1. Enter 360° AVM interface from the entertainment mainframe interface.
2. Select 3D mode, tap the lower left corner of the screen or the 3D button continuously for several times, and the system automatically enters the calibration interface to start the calibration.
3. If the calibration is successful, it will enter the calibration successful interface.
4. If the calibration is failed, the calibration failure will be displayed. After the calibration is failed, adjust the position of calibration cloth, and re-calibrate until it is successful.

Result Verification

1. The 360° AVM camera calibration process ends normally;
2. Check that the 360° AVM functions normally and the control module has no relevant DTCs;

Rearward Driver Assistance System (LHRDA/RHRDA)

Scenario and Path

Scenario	Refresh	Configuration	Self-learning	Operating Steps
Software Update	①			SIPS - Programming and Coding - LHRDA - Refresh SIPS - Programming and Coding - RHRDA - Refresh
Configuration		①		SIPS - Programming and Coding - LHRDA - Configuration SIPS - Programming and Coding - RHRDA - Configuration
ECU Replacement	①	②	③	SIPS - Programming and Coding - LHRDA - Replacement SIPS - Programming and Coding - RHRDA - Replacement SIPS - Fast Channel - Rear Left Corner Radar Self-Learning SIPS - Fast Channel - Rear Right Corner Radar Self-Learning
The position of the corner radar module changes, or the operation of four-wheel alignment causes the change of the driving axis.			①	SIPS - Fast Channel - Rear Left Corner Radar Self-Learning SIPS - Fast Channel - Rear Right Corner Radar Self-Learning

Number in ◯ describes the sequence of performing the functional operations

Refresh

Function Description

This function is used for updating the internal application and calibration software of ECU so as to realize the upgrade of ECU control logic and control functions.

Operation Conditions

1. Place the shift lever in P or N position;
2. The Start switch is in ON position;
3. The vehicle is not started.

Configuration

Function Description

This function is used for re-configuring each control function of ECU and writing VIN.

Operation Conditions

1. Place the shift lever in P or N position;
2. The Start switch is in ON position;
3. The vehicle is not started.

Self-learning

Function Description

This function is used to calibrate the module's relative position in the vehicle when the position of the corner radar module changes, such as when replacing or removing and fitting the rear left or rear right corner radar module, the rear bumper,

and performing operations that cause a change in the vehicle's driving axis, such as four-wheel alignment. The purpose of calibration is to determine the deviation between the radar antenna axis and the vehicle's driving axis in both horizontal and vertical directions, and then compensate for them through algorithms to ensure that they align or fall within an allowable range. This is done to ensure the proper functioning of the radar module related functions.

Operation Conditions

1. Place the shift lever in P or N position;
2. The Start switch is in ON position;
3. The vehicle is not started.

Note：Learning Process: The vehicle must travel for a period of time on a long straight road with neatly arranged markers such as electric poles on both sides at a speed of no less than 40km/h and no more than 60km/h (the specific learning time depends on the road conditions and the number of reference objects on both sides).

Note：When the module calibration is 100% completed, power off for one minute (avoid operations like opening/closing the door or window or turning on/off the entertainment mainframe, which will wake the bus up), and then power on again.

Instrument Pack (IPK)

Scenario and Function

Scenario	Refresh	Configuration	Operating Steps
IPK Software Update	①	②	SIPS - Programming and Coding - IPK - Refresh
IPK Configuration		①	SIPS - Programming and Coding - IPK - Configuration
IPK Replacement	①	②	SIPS - Programming and Coding - IPK - Replacement

Number in ◯ describes the sequence of performing the functional operations

IPK Refresh

Function Description

This function is used for updating the application or calibration software of IPK, and modifying the corresponding display functions.

Operation Conditions

1. Place the shift lever in P position.
2. The Start switch is in ON position.
3. The vehicle is not started.

Result Verification

1. The ECU refresh process ends normally;
2. Check that the IPK functions normally and the control module has no relevant DTCs;
3. Check that the software version of ECU is correct.

IPK Configuration

Function Description

This function is used for configuring each display function of IPK according to actual characteristics of the vehicle and writing VIN.

Operation Conditions

1. Place the shift lever in P position.
2. The Start switch is in ON position.
3. The vehicle is not started.

Result Verification

1. The ECU configuration process ends normally;
2. Check that the IPK functions normally and the control module has no relevant DTCs;
3. Check that the configuration file version of ECU is correct.

Front Infotainment Control Module (FICM)

Scenario and Function

Scenario	MPU Refresh	MCU Refresh	Configuration	Maintenance Reset	Operating Steps
MPU Software Update of Entertainment Mainframe	①				Special USB - Refresh
MCU Software Update of Entertainment Mainframe		①			SIPS - Programming and Coding - FICM - Refresh
Entertainment Mainframe Configuration			①		SIPS - Programming and Coding - FICM - Configuration
Entertainment Mainframe Replacement	①	②	③		Special USB - Refresh SIPS - Programming and Coding - FICM - Replacement
Vehicle Maintenance				①	Head Unit - Engineering Mode - Maintenance Reset

Number in ◯ describes the sequence of performing the functional operations

MPU Refresh

Function Description

This function is used for updating the MPU software of FICM, and modifying the corresponding display or control functions.

Operation Conditions

1. Place the shift lever in P position.
2. The Start switch is in ON position.
3. Do not power off the vehicle through the screen.
4. Use a special USB flash drive.

Operating Steps

1. Prepare a USB flash drive, which should be USB2.0 or above, with a memory of 64G and the format of FAT32.
2. Download the update package from the specified path to the root directory of the USB flash drive.

   After copying the upgrade data, eject the USB flash disk safely instead of pulling it out directly. Do not put other irrelevant files in the USB flash disk.
3. Insert the USB flash drive into the front left USB port.
4. After the entertainment system operates normally, enter the Settings interface - System, tap the system version 5 times, and enter the PIN code: 1234@ABCd.
5. Use "Volume +/-" to move the cursor up or down, and use the "HOME" button to select "Update AliOS".
6. During the update, the system will be loaded and automatically restarted for several times, and then the "System Loading" interface will be displayed. After loading, the login interface will be displayed. This may take about 20 to 40 minutes. Please be patient.
7. After the update, log in again and check whether the system version information is correct: Log in - Go to the Settings interface - System - AliOS Version.

Result Verification

1. The ECU refresh process ends normally;
2. Check that the entertainment system functions normally and the control module has no relevant DTCs;
3. Check that the software version of ECU is correct.

MCU Refresh

Function Description

This function is used for updating the MCU software of FICM, and modifying the corresponding display or control functions.

Operation Conditions

1. Place the shift lever in P position.
2. The Start switch is in ON position.
3. Do not power off the vehicle through the screen.

Result Verification

1. The ECU refresh process ends normally;
2. Check that the entertainment system functions normally and the control module has no relevant DTCs;
3. Check that the software version of ECU is correct.

Configuration

Function Description

This function is used for configuring each display or control function of FICM according to actual characteristics of the vehicle and writing VIN.

Operation Conditions

1. Place the shift lever in P position.
2. The Start switch is in ON position.
3. Do not power off the vehicle through the screen.

Result Verification

1. The ECU configuration process ends normally;
2. Check that the entertainment system functions normally and the control module has no relevant DTCs;
3. Check that the configuration file version of ECU is correct.

Maintenance Reset

Function Description

This function is used to reset the maintenance interval displayed on the entertainment mainframe to the initial value.

Operation Conditions

1. Place the shift lever in P position.
2. The Start switch is in ON position.
3. Do not power off the vehicle through the screen.

Result Verification

1. The maintenance reset process ends normally;

Communication Module (TBOX)

Scenario and Function

Scenario	MPU Refresh	MCU Refresh	Configuration	Settings	Restart	Operating Steps
TBOX Software Update	①	②				1. Special Flash Tool - Flash or Special USB Flash Drive - Flash 2. SIPS - Programming and Coding - TBOX - Refresh
TBOX Configuration			①			SIPS - Programming and Coding - TBOX - Configuration
TBOX Replacement	①	②	③	④		1. Special Flash Tool - Flash or Special USB Flash Drive - Flash 2. SIPS - Programming and Coding - TBOX - Replacement
Abnormal TBOX Function					①	SIPS - Fast Channel - TBOX Restart

Number in ◯ describes the sequence of performing the functional operations

MPU Refresh - Special Flash Tool

Function Description

This function is used for updating the MPU software of TBOX, and modifying the corresponding control functions.

Operation Conditions

1. Place the shift lever in P position.
2. Power on the vehicle before operation, and ensure that the "READY" lamp is not illuminated.
3. Do not power off the vehicle through the screen.
4. Connect the special flash tool.

Operating Steps

1. Connect the USB port of the TBOX special update tool TEL00055 to the special update computer, and connect the other end to the TBOX.

Caution：The refresh tool directory should be placed in the same directory as the LTE package directory.

2. Open the special flash tool program and tap the "Flash" button to start flashing.
3. The tool will recognize the normal serial port. Select the package version directory according to the MCU number, and tap "OK" to confirm the information and continue the following steps for flashing.
4. After the port and package directory are recognized, the user is prompted to select a download method and select "Yes" for normal update. The CEFS file inside the module will be read out first, and then the overwrite download will be performed with the CEFS file. If the overwrite download is selected when the partition is not the same or is damaged, select "No" to proceed.

Caution：It is recommended to click "No" to overwrite and upgrade all files.

5. After the update is completed, "Flashing succeeded" will be displayed.

Result Verification

- The refresh process ends normally.
- The application software version of ECU is correct.

MPU Refresh - Special USB Flash Drive (Saic1.0+)

Function Description

This function is used for updating the MPU software of TBOX, and modifying the corresponding control functions.

Operation Conditions

1. Place the shift lever in P position.

2. Power on the vehicle before operation, and ensure that the "READY" lamp is not illuminated.
3. Do not power off the vehicle through the screen.
4. Use a special USB flash drive.

Operating Steps

1. Prepare a USB flash drive, which should be USB2.0 or above.
2. Download the update package from the specified path, and decompress and store it in the root directory of the USB flash drive.

Caution：After copying the upgrade data, eject the USB flash disk safely instead of pulling it out directly, and do not put other irrelevant files in the USB flash disk.

3. Insert the USB flash drive into the front USB port.
4. In the function bar of the main interface, tap [Settings] -> [System], tap the software version number for 5 times until a dialog box appears, and enter the password "200519" to enter the engineering mode
5. Tap [USB upgrade] to enter the USB upgrade interface, and select [Telematic box MPU] to enter the MPU upgrade interface. Complete the MPU refresh according to the interface prompts.

Result Verification

- The refresh process ends normally.
- The application software version of ECU is correct.

MPU Refresh - Special USB Flash Drive (Color Radio)

Function Description

This function is used for updating the MPU software of TBOX, and modifying the corresponding control functions.

Operation Conditions

1. Place the shift lever in P position.
2. Power on the vehicle before operation, and ensure that the "READY" lamp is not illuminated.
3. Do not power off the vehicle through the screen.
4. Use a special USB flash drive.

Operating Steps

1. Prepare a USB flash drive, which should be USB2.0 or above.
2. Download the update package from the specified path, and decompress and store it in the root directory of the USB flash drive.

Caution：After copying the upgrade data, eject the USB flash disk safely instead of pulling it out directly, and do not put other irrelevant files in the USB flash disk.

3. Insert the USB flash drive into the front USB port.
4. Tap [BT Phone], and enter the password "#*#4479*#*" to enter the engineering mode
5. Tap [USB Update] to enter the USB update interface, tap the [UPDATE] button in the TBOX module, and then select [Tbox soc only] to enter the MPU update interface. Complete the MPU refresh according to the interface prompts.

Result Verification

- The refresh process ends normally.
- The application software version of ECU is correct.

MCU Refresh

Function Description

This function is used for updating the MCU software of TBOX, and modifying the corresponding control functions.

Operation Conditions

1. Place the shift lever in P position.
2. Power on the vehicle before operation, and ensure that the "READY" lamp is not illuminated.
3. Do not power off the vehicle through the screen.

Result Verification

1. The ECU refresh process ends normally;
2. Check that the mobile network communication function of the vehicle is normal and the control module has no relevant DTCs;
3. Check that the software version of ECU is correct.

Configuration

Function Description

This function is used for configuring each control function of ECU according to actual characteristics of the vehicle and writing VIN.

Operation Conditions

1. Place the shift lever in P position.
2. Power on the vehicle before operation, and ensure that the "READY" lamp is not illuminated.
3. Do not power off the vehicle through the screen.

Result Verification

1. The ECU configuration process ends normally;
2. Check that the mobile network communication of the vehicle is normal and the control module has no relevant DTCs;
3. Check that the configuration file version of ECU is correct.

Settings

Function Description

This function is used for the secret key interaction between the TBOX and the BCM and background when TBOX is replaced.

Operation Conditions

1. Place the shift lever in P position.

2. Power on the vehicle before operation, and ensure that the "READY" lamp is not illuminated.
3. Do not power off the vehicle through the screen.

Restart

Function Description

This function is used for restarting TBOX.

Operation Conditions

1. Place the shift lever in P position.
2. Power on the vehicle before operation, and ensure that the "READY" lamp is not illuminated.
3. Do not power off the vehicle through the screen.

Result Verification

1. The ECU setting process ends normally;
2. Check that the mobile network communication of the vehicle is normal and the control module has no relevant DTCs;

Electronic Battery Sensor (EBS)

Scenario and Function

Scenario	Battery ID Write-in	Vehicle stationary	Operating Steps
Battery Sensor Replacement	①	②	SIPS - Fast Channel - Battery ID Write-in
Battery Replacement	①	②	SIPS - Fast Channel - Battery ID Write-in

Number in ◯ describes the sequence of performing the functional operations

Battery ID Write-in

Function Description

After replacing with a new battery sensor or battery, the Battery ID Write-in operation must be performed.

Operation Conditions

1. Place the shift lever in P or N position.
2. The Start switch is in ON position.
3. The vehicle is not started.

Result Verification

The Battery ID Write-in process ends normally.

Vehicle stationary

Function Description

After power-off, the vehicle should stand for 4 hours to obtain the accurate battery status information.

Operation Conditions

1. The Start switch is in OFF position.
2. The vehicle should stand for at least 4 hours.

Result Verification

No related battery failures.

Front Left Seat Module (FLSM)

Battery Management System (BMS)

Scenario and Function

Scenario	Refresh	Configuration	BMS Parameter Backup	BMS Parameter Write-in	Operating Steps
BMS Refresh	①				SIPS - Programming and Coding - BMS - Refresh
BMS Configuration		①			SIPS - Programming and Coding - BMS - Configuration
HV Battery Pack Assembly Replacement	①	②			SIPS - Programming and Coding - BMS - Replacement
BMS Replacement - Old BMS Module Has Communication	②	③	①	④	SIPS - Programming and Coding - BMS - Self-learning - BMS Parameter Backup and Write-in - BMS Parameter Backup SIPS - Programming and Coding - BMS - Replacement SIPS - Programming and Coding - BMS - Self-learning - BMS Parameter Backup and Write-in - BMS Parameter Write-in
BMS Replacement - Old BMS Module Has No Communication	①	②			SIPS - Programming and Coding - BMS - Replacement

Number in ◯ describes the sequence of performing the functional operations

BMS Refresh

Function Description

This function is used for updating the internal application or calibration software of ECU, and modifying the corresponding control functions.

Operation Conditions

1. Place the shift lever in P position.
2. The Start switch is in OFF position.
3. 12V battery is charged from external power source before operation.

Result Verification

- The refresh process ends normally.
- The application software version of ECU is correct.

BMS Configuration

Function Description

This function is used for configuring each control function of ECU according to actual characteristics of the vehicle and writing VIN.

Operation Conditions

1. Place the shift lever in P position.
2. The Start switch is in OFF position.
3. 12V battery is charged from external power source before operation.

Result Verification

- The configuration process ends normally.
- The configuration file version of ECU is correct.

BMS Parameter Backup

Function Description

This function reads and backs up the original battery data, mileage, date and other information from the old BMS for subsequent writing to the newly replaced BMS module.

Operation Conditions

1. Place the shift lever in P position.
2. The Start switch is in OFF position.
3. 12V battery is charged from external power source before operation.
4. The BMS on the vehicle is the old BMS.

Result Verification

- The whole process ends normally.

BMS Parameter Write-in

Function Description

This function is to write the original battery data, mileage, date and other information that has been backed up into the newly replaced BMS module.

Operation Conditions

1. Place the shift lever in P position.
2. The Start switch is in OFF position.
3. 12V battery is charged from external power source before operation.
4. The BMS on the vehicle is the new BMS.
5. The new BMS has successfully performed the replacement function on the SIPS.

Result Verification

- The whole process ends normally.

Shifter Control Unit - SCU

Scenario and Function

Scenario	Update	Configuration	Route
SCU Update	①		SIPS—Programming and Coding—SCU—Update
SCU Configuration		②	SIPS—Programming and Coding—SCU—Configuration
SCU Replacement	①	②	SIPS—Programming and Coding—SCU—Replacement

Number in ◯ describes the sequence of performing the functional operations

SCU Update

Function Description

This function is used for updating the internal application or calibration softwares of ECU so as to realize the upgrade of corresponding control logic and control functions.

Operation Conditions

1. Place the shift lever in P or N position;
2. The start switch is in ON position;
3. The vehicle does not start;

Result Verification

The update process ends normally.

The application software version of ECU is correct.

SCU Configuration

Function Description

This function is used for configuring each control function of ECU according to actual characteristics of the vehicle and writing VIN.

Operation Conditions

1. Place the shift lever in P or N position;
2. The start switch is in ON position;
3. The vehicle does not start;

Result Verification

The configuration process ends normally.

Glossary

Name	Description
SRS	Supplementary Restraint System
ICS	Inflatable Curtain Structure
SDM	Sensing Diagnostic Module
ECU	Electronic Control Unit
VIN	Vehicle Identification Number
CAN	Controller area network
SCU	Shifter Control Unit
EPS	Electric Power Steering
ABS	Anti-lock braking system
EBD	Electronic Braking-force Distribution
BCM	Body Control Module
LIN	Local Interconnect Network
LED	Light Emitting Diode
PWM	Pulse Width Modulation
PEPS	Passive Entry Passive Start
ECM	Engine Control Module
SCS	Stability Control System
EPB	Electronic Park Brake
FVCM	Front View Camera Module
AUTO	Automatic
TCM	Transmission Control Module
PVC	Polyvinyl Chloride
HSLA	High Strength Low Alloy
GW	Gateway
ICE	In Car Entertainment
EBS	